N60921.AR.000062
NSWC WHITE OAK
5090.3a

Section : 02.02
Site 20903-5640 (White Oak)
Doc. #: 0002

Post-Removal Verification Sampling Plan

at

Sites 8, 9, and 11

Naval Surface Warfare Center White Oak

Silver Spring, Maryland

Engineering Field Activity Chesapeake
Naval Facilities Engineering Command

Contract Number N62472-90-D-1298

Contract Task Order 0180

September 1996

Brown & Root Environmental

A Division of Halliburton NUS Corporation

00061

Section: 02.02
Site 20903-5640 (White Oak)
Doc. #: W/0002

Foster Plaza VII
661 Andersen Drive
Pittsburgh, PA 15220-2745

Brown & Root Environmental

A Division of Halliburton NUS Corporation

(412) 921-7090
FAX: (412) 921-4040

C-49-9-6-85

September 12, 1996

bcc: Mr. Robert DeLisio, BRE

Project Number 2295

Ms. Donna W. Jordan
Remedial Project Manager
Engineering Field Activity Chesapeake
901 M. Street S.E., Building 212
Washington Navy Yard
Washington, DC 20374-5018

Reference: Clean Contract No. N62472-90-D-1298
Contract Task Order No. 0180

Subject: Naval Surface Warfare Center - White Oak
Silver Spring, Maryland
Sites 8, 9, and 11
Post-Removal Verification Sampling Plan

Dear Ms. Jordan:

Enclosed are 10 copies of the Post-Removal Verification Sampling Plan for Sites 8, 9, and 11 at the Naval Surface Warfare Center, White Oak, located in Silver Spring, Maryland. The plan has been modified to address comments received from Engineering Field Activity - Chesapeake, United States Environmental Protection Agency, and Maryland Department of the Environment personnel.

Please feel free to contact me at 412-921-7134 with any comments or questions regarding the information submitted.

Very truly yours,

Scott A. Nesbit

Scott A. Nesbit, P.E.
Project Manager

SAN/pm

Enclosures

cc: Mr. Roger Boucher, NORTHDIV (w/o enclosures)
Mr. Dave Mills, EFACHES
Mr. John Trepanowski, BRE
Mr. Daryl Hutson, BRE (w/o enclosures)
Project File 2295

Section: 02-02
Site 20903-5640 (White Oak)
Doc. #: 0002

069605/P

POST-REMOVAL VERIFICATION SAMPLING PLAN AT SITES 8, 9, AND 11

NAVAL SURFACE WARFARE CENTER WHITE OAK SILVER SPRING, MARYLAND

COMPREHENSIVE LONG-TERM ENVIRONMENTAL ACTION NAVY (CLEAN) CONTRACT

Submitted to:
Engineering Field Activity Chesapeake
Environmental Branch Code 18
Naval Facilities Engineering Command
Washington Navy Yard, Building 212
Washington, D.C. 20374-2121

Submitted by:
Brown & Root Environmental
993 Old Eagle School Road, Suite 415
Wayne, Pennsylvania 19087-1710

CONTRACT NUMBER N62472-90-D-1298
CONTRACT TASK ORDER 0180

SEPTEMBER 1996

PREPARED BY:

Scott Nesbit

SCOTT NESBIT, P.E.
PROJECT MANAGER
BROWN & ROOT ENVIRONMENTAL
PITTSBURGH, PENNSYLVANIA

APPROVED BY:

JOHN J. TREPANOWSKI, P.E.
PROGRAM MANAGER
BROWN & ROOT ENVIRONMENTAL
WAYNE, PENNSYLVANIA

TABLE OF CONTENTS

SECTION		PAGE
1.0	**INTRODUCTION AND PROJECT BACKGROUND**	**1-1**
1.1	PROJECT BACKGROUND	1-1
1.2	INTERIM REMOVAL ACTION DESIGN AND IMPLEMENTATION	1-2
1.3	PRVSP OBJECTIVE	1-3
2.0	**FIELD OPERATIONS**	**2-1**
2.1	SITE SPECIFIC SAMPLING AND ANALYSIS	2-1
2.1.1	Site 8 - Abandoned Chemical Disposal Pit	2-1
2.1.2	Site 9 - Industrial Wastewater Disposal "Area 300"	2-1
2.1.3	Site 11 - Industrial Wastewater Disposal "Area 100"	2-4
2.2	INITIAL SAMPLING AND ANALYSIS	2-4
2.3	ADDITIONAL SAMPLING AND ANALYSIS	2-5
2.4	WASTE HANDLING	2-6
2.5	RECORD KEEPING	2-6
2.6	HEALTH AND SAFETY	2-6
3.0	**ENVIRONMENTAL SAMPLING PROCEDURES**	**3-1**
3.1	CONFIRMATORY SOIL SAMPLING	3-1
3.2	DECONTAMINATION	3-1
3.3	SAMPLE HANDLING	3-3
3.3.1	Sampling Identification System	3-3
3.3.2	Sample Packaging and Shipping	3-4
3.4	SAMPLE CUSTODY	3-4
4.0	**PROJECT MANAGEMENT PLAN**	**4-1**
4.1	PROJECT ORGANIZATION	4-1
4.2	NAVY SUPPORT	4-3
4.3	LABORATORY SUBCONTRACTOR	4-3
4.4	CONTINGENCY PLAN	4-4

APPENDICES

A **FORMS FOR FIELD ACTIVITIES**
Daily Activities Record
Equipment Calibration Sheet
Sample Log Sheet
Chain-of-Custody
Sample Label
Custody Seal

B **BROWN AND ROOT ENVIRONMENTAL STANDARD OPERATING PROCEDURES**
SA-1.3 Soil Sampling
SA-6.1 Non-Radiological Sample Handling
SA-6.3 Field Documentation
SA-7.1 Decontamination of Field Equipment and Waste Handling
ME-12 Photovac 2020 Photoionization Air Monitor

TABLES

SECTION		PAGE
2-1	Site Specific Cleanup Levels	2-2
3-1	Sampling Methodology	3-2

FIGURES

SECTION		PAGE
4-1	Project Organization Chart	4-2

1.0 INTRODUCTION AND PROJECT BACKGROUND

The Northern Division of the Naval Facilities Engineering Command has issued Contract Task Order Number 0180 (CTO 180) to Brown & Root Environmental (B&R Environmental), a Division of Halliburton NUS Corporation, under the Comprehensive Long-term Environmental Action Navy (CLEAN) Contract No. 62472-90-D-1298. CTO 180 is for environmental work which includes investigative, engineering, design, and post-construction award services (PCAS) for the implementation of a Source Removal Action at six sites at the Naval Surface Warfare Center, White Oak, in Silver Spring, Maryland (NSWCWODET). Under CTO 180 B&R Environmental has completed investigation and design activities for source removal actions at three sites. Source removal action at Sites 8, 9, and 11 at NSWCWODET is anticipated to begin in August 1996. This Post-Removal Verification Sampling Plan (PRVSP) presents a plan to perform confirmatory sampling and analysis to verify that contaminated soil at NSWCWODET are removed as part of the source removal action.

1.1 PROJECT BACKGROUND

NSWCWODET is a Navy owned and operated laboratory for Naval Surface Warfare research, located approximately 5 miles north of Washington, D.C., off New Hampshire Avenue in Silver Spring, Maryland. The facility is located in both Prince George and Montgomery counties. NSWCWODET is bordered by the Adelphi Laboratory Center and the United States Naval Reserve (USNR) Training Center along with a mixture of residential, park and industrial, commercial properties. NSWCWODET covers approximately 732 acres.

This report addresses removal actions at three of the seven Installation Restoration Program Sites previously identified at the base. These sites are:

Site 8 - Abandoned Chemical Disposal Pit
Site 9 - Industrial Wastewater Disposal from "300" Area
Site 11 - Industrial Wastewater Disposal from "100" Area

Site 8 - Abandoned Chemical Disposal Pit - This site is located along the southern facility boundary, at the end of Perimeter Road. The site has been described as a pit 10-feet by 10-feet by 12-feet. The location of the site has been estimated based upon previous knowledge of the site activities and from the results of several subsurface studies. Site 8 was used from 1951 until 1971 for disposal of miscellaneous waste

chemicals from laboratories at the NSWCWODET facility. Wastes disposed at this site included acids, mercury, solvents and numerous unidentified waste chemicals. The primary wastes of concern include solvents and mercury. It has been estimated that approximately 180 pounds of mercury were disposed at this location.

Site 9 - Industrial Wastewater Disposal from "300" Area - This site is located south of Dahlgren Road along the Montgomery/Prince George County line and extends southward to the facility boundary. A perennial tributary of Paint Branch Creek is located west and south of the site and an intermittent tributary of the creek is located to the east.

The Industrial Waste Water Disposal Area 300 was used from the early 1950s until the mid-1970s. Several leaching wells and above ground discharges to the soil were used in this area for disposal of liquid wastes containing explosive related compounds. Waste water disposed at the site contained TNT, RDX and several other explosive related compounds. It is estimated that at least 7,200 pounds of these waste waters were disposed at this site over a period of approximately 25 years. It is also reported that solvents were disposed in the same manner as the explosive compounds.

Site 11 - Industrial Wastewater Disposal from "100" Area - Site 11 contains thirteen leaching wells in nine areas that were used for wastewater Disposal from laboratory activities. The wells are located in an area covering approximately 16 acres. The wells are abandoned while the associated supply lines are believed to be in place. The wells were used for liquid waste disposal until 1976. Original construction consisted of an eight foot diameter, brick or concrete well approximately nine feet in depth. Each well was accessible through a 24 inch diameter manhole cover. One supply line transported wastewater to each well.

Wastes that were disposed at Site 11 include metals, acids, chlorinated and non-chlorinated solvents, alcohols, lead, and organic explosive compounds. The Initial Assessment Study (1984) reports that an estimated 20,000 gallons of waste were disposed in these leaching wells. Both listed and characteristic hazardous wastes are believed to have been disposed.

1.2 INTERIM REMOVAL ACTION DESIGN AND IMPLEMENTATION

B&R Environmental performed design work and prepared construction plans and specifications to implement the source removal action. The source removal action will be performed by the Atlantic Division Remedial Action Contractor (RAC) - OHM, beginning in August 1996.

One of the first steps to be performed as part of the source removal action is excavation and offsite disposal of contaminated soil and associated construction debris present at Sites 8, 9, and 11. The RAC will perform the excavation and disposal activities. The RAC will also perform field screening analysis to preliminary determine if soil with elevated concentrations of volatile and semi-volatile organic compounds (VOC/SVOC) have been removed.

1.3 PRVSP OBJECTIVE

After the preliminary field analysis by the RAC indicates that gross soil contamination has been excavated, B&R Environmental will perform confirmatory sampling and analysis. The objective of this PRVSP is to describe the procedures that B&R Environmental will use to obtain and analyze soil samples as part of the confirmatory sampling and analysis.

2.0 FIELD OPERATIONS

The RAC will perform preliminary field screening and analysis to make a determination regarding excavation of soil with significant levels of contamination. After the RAC has made a preliminary determination that the excavation is complete, B&R Environmental will perform the initial round of confirmatory sampling and analysis.

If the initial round of confirmatory sampling and analysis indicates that soil remaining at the site is above the field clean levels, the RAC will perform additional excavation and field screening. B&R Environmental will then perform a second round of confirmatory sampling and analysis. The process will continue until the confirmation sampling and analysis (performed through B&R Environmental) verifies that concentrations in the remaining site soil are below the required response level.

The initial round of confirmatory sampling and analysis will be performed in accordance with the procedures contained in Section 2.2. Additional sampling and analysis will be performed in accordance with Section 2.3.

2.1 SITE SPECIFIC SAMPLING AND ANALYSIS

2.1.1 Site 8 - Abandoned Chemical Disposal Pit

Elevated concentrations of metals, VOCs and SVOCs were identified in the soils at the location believed to be the abandoned chemical disposal pit. The primary constituents of concern, and their corresponding clean levels are provided in Table 2-1. Confirmation sampling at the site will consist of the collection of soil samples for metals/cyanide, VOC and SVOC analysis. Specific analytical methods to be used during the confirmation sampling activities are presented in Table 3-1.

2.1.2 Site 9 - Industrial Wastewater Disposal "Area 300"

Two former leaching wells are being removed during the source removal action, however only one of these wells, Leaching Well 9 (LW-9), was found to contain elevated concentrations of contaminants in the leaching well sediments. Contaminants identified in LW-9 consist of metals, VOCs and SVOCs. Confirmation sampling at the site will consist of the collection of soil samples for metals/cyanide, VOCs, and SVOC analysis.

TABLE 2-1
Site Specific Cleanup Levels

Chemical of Concern	Cleanup Level (mg/kg)
Site 8	
Metals/Cyanide	
antimony	31
arsenic	2.5
barium	32
cadmium	6
chromium	19
copper	3100
lead	400
mercury	3
nickel	21
cyanide	1600
Volatile Organics	
1,1,2 trichloroethane (TCA)	0.01
toluene	5
chloroform	0.3
methylene chloride	0.01
tetrachloroethene (PCE)	0.04
trichloroethene (TCE)	0.02
Semivolatile Organics	
n-nitrosodiphenylamine	0.2
Site 9	
Metals/Cyanide	
mercury	3
Volatile Organics	
1,2-dichloroethene	0.2
trans-1,2-dichloroethene	0.3
chloroform	0.3
methylene chloride	0.01
tetrachloroethene (PCE)	0.04
toluene	5
trichloroethene (TCE)	0.02
trichlorofluoromethane	13
vinyl chloride	0.01
Semivolatile Organics	
benzo(a)athracene	0.7
benzo(b)fluoranthene	0.88
benzo(k)fluoranthene	4
benzo(a)pyrene	0.088
benzo(g,h,i)perylene	4
Exlposives	
RDX	5.8
HMX	3900

TABLE 2-1
Site Specific Cleanup Levels

Chemical of Concern	Cleanup Level (mg/kg)
2,4,6-trinitrotoluene	21
2,6-dinitrotoluene	0.1
2,4-dinitrotoluene	0.2
nitrobenzene	0.09
Site 11	
Metals/Cyanide	
arsenic	2.5
cadmium	6
chromium	19
copper	3100
lead	400
mercury	3
nickel	21
silver	390
thallium	0.4
cyanide	1600
Volatile Organics	
1,1-dichloroethane	11
1,2-dichloroethane	0.03
1,1-dichloroethene	0.03
1,2-dichloroethene	0.2
1,1,1 trichloroethene	0.02
trans-1,2-dichloroethene	0.3
1,2 dichloropropane	0.02
carbon tetrachloride	0.03
chloroform	0.3
methylene chloride	0.01
tetrachloroethene (PCE)	0.04
tetrahydrofuran	0.2
1,1,2 trichloroethane (TCA)	0.01
trichlorobenzene	2
trichloroethene (TCE)	0.02
Semivolatile Organics	
1,2,4-trichlorobenzene	2

In addition, explosive compounds associated with Area 300 research activities, will be included in the confirmation sampling. Specific analytical methods to be used during the confirmation sampling activities are presented in Table 3-1.

The second leaching well to be removed, Leaching Well 1 (LW-1), was not found to contain significant levels of contamination and is being removed as general site improvement procedure. However, confirmation sampling will be performed during the removal of LW-1 to ensure that residual contamination is not present.

2.1.3 Site 11 - Industrial Wastewater Disposal "Area 100"

Four former leaching wells are being removed during the source removal action at Site 11. Leaching Well 2 (LW-2), was found to contain elevated concentrations of contaminants in the leaching well sediments. Contaminants identified in LW-2 consist of metals and SVOCs. Confirmation sampling at the site will consist of the analysis of soil samples for metals/cyanide, VOCs and SVOCs. Specific analytical methods to be used during the confirmation sampling activities are presented in Section 3.0. In addition samples will be analyzed for VOCs which were associated with site groundwater contamination.

Two adjacent leaching wells, Leaching Well 12 (LW-12) and Leaching Well 13 (LW-13), were found to contain elevated concentrations of metals, VOCs and SVOCs. Confirmation sampling at LW-12 and LW-13 will consist of the analysis of soil samples for metals/cyanide, VOCs, and SVOCs. The drain line associated with these two leaching wells will also be removed during the completion of the work. Soil samples shall be collected as needed following excavation and removal of the pipe, to identify areas of previous leakage and residual soil contamination. Samples collected along the pipe excavation shall be analyzed for metals/cyanide, VOCs and SVOCs.

The fourth leaching well to be removed at Site 11, Leaching Well 4 (LW-4), was not found to contain significant levels of contamination and is being removed as a general site improvement procedure. Confirmation sampling will be performed during the removal of LW-4 to ensure that residual contamination is not present.

2.2 INITIAL SAMPLING AND ANALYSIS

The anticipated areas for the initial excavation were illustrated on the Construction Drawings. The actual excavation area will be determined by the RAC.

Initial confirmatory sampling and analysis will be performed by B&R Environmental after preliminary field screening analysis by the RAC confirms that the excavation of soil with gross organic contamination is complete.

Sample Location. At each leaching well excavation area, five samples will be collected. Samples shall be collected from the floor of each excavation and along each excavation side wall. The sample collected along the excavation floor shall be collected from the center of the excavation. Samples collected along the sidewall shall be collected at the midpoint of the length of the sidewall, and three feet from the base of the excavation.

Samples collected along the pipe excavation shall be collected at open pipe joints, where the pipe integrity may be suspect, where visual signs of contamination are present, or where field screening indicates the presence of significant contamination. Photo ionization and/or flame ionization detectors shall be employed to identify suspect areas. The collection of the samples at these areas shall be conducted at the discretion of the Navy field representative. Composite sampling will be performed in areas where pipe joints/breaks are closer than 20 feet.

At Site 8, a sampling grid shall be established at the base of the excavation. Samples will be collected from the centers of a 3-foot grid. Two samples will also be collected from each side of the excavation at a height two feet above the base of the excavation.

Sample Location Description. Each sample location will be recorded relative to dimensions of the initial and subsequent excavation (north, south, east, or west, along with depth from ground surface, distance along the sidewall or pipe excavation station).

Sample Collection. Because excavation is anticipated to be completed by the time this work is performed, soil samples will be collected from the surface soil (at the excavation base or sidewall surface) as described in Section 3.0. No subsurface sampling techniques (i.e., hand augers) are proposed.

2.3 ADDITIONAL SAMPLING AND ANALYSIS

Analytical results from the initial round of sampling and analysis will be used to determine the need (if any) for additional excavation (by the RAC), sampling and analysis. If the concentration of the contaminants of concern exceed the appropriate action/risk level, then the RAC will perform additional excavation. The determination for the need for additional sampling will be made by the Navy.

After the RAC's field screening analysis indicates that gross soil contamination is not present, B&R Environmental will perform additional sampling and analysis. The additional analysis will consist only of those specific contaminants found in excess of the remedial goal at each sampling location. Subsequent sampling and analysis will focus on those specific parameters only.

2.4 WASTE HANDLING

All disposable equipment, disposable clothing and other investigative derived waste (IDW) will be collected by B&R Environmental and placed in plastic garbage bags. All bagged IDW will be disposed of by the RAC.

2.5 RECORD KEEPING

In addition to chain-of-custody records provided in Appendix A, a standard sample log sheet for soils will be completed for sample description and documentation. This form is also contained in Appendix A.

A bound/weatherproof site logbook shall be maintained by the B&R Environmental field representative. The requirements of the site logbook are outlined in B&R Environmental SOP SA-6.3. This book will contain a summary of the day's activities and will reference the field notebooks when applicable. All information related to sampling or field activities will be recorded in the field notebook. This information will include, but is not limited to, sampling time, weather conditions, unusual events, field measurements, descriptions of photographs, etc.

At the completion of field activities, the B&R Environmental field representative shall submit all field records, data, field notebooks, chain-of-custody receipts, sample log sheets, drilling logs, daily logs, etc., to the Project Manager.

2.6 HEALTH AND SAFETY

All field activities will be performed in accordance with the Site-Specific Health and Safety Plan, previously submitted with the Design Verification Sampling and Analysis Plan.

3.0 ENVIRONMENTAL SAMPLING PROCEDURES

All soil samples will be handled, labeled and shipped to the laboratory according to the following procedures. The analytical program for soil and QA/QC samples to be collected during confirmation sampling is listed in Table 3-1.

3.1 CONFIRMATORY SOIL SAMPLING

Confirmatory soil samples will be collected within each leaching well/pit excavation, and as needed along the pipeline excavation. At each sampling location, a volume of soil sufficient for the required analyses shall be obtained using a stainless steel or disposable trowel and placed in the sample jar and labeled. The chain-of-custody procedure will then be initiated as are described in Section 3.3 (see B&R Environmental Standard Operating Procedure in Appendix B) and the sampling information will be recorded in the field logbook. If stainless steel trowels are utilized during sampling, the trowels must be decontaminated between samples as described in Section 3.2.

All soil samples will be submitted to a fixed laboratory for 48-hour, rapid turnaround analysis. Standard method detection levels, identified in USEPA SW846, will be used during sample analysis.

The soil sample locations will be marked by labeled pin flags. These flags will not to be disturbed until the analytical results confirm the success of the contaminant removal.

3.2 DECONTAMINATION

The non disposable equipment used for field sampling activities will be decontaminated prior to, during, and at completion of the sampling activities.

The following decontamination steps will be taken:

- Potable water rinse
- Alconox or liquinox detergent wash
- Potable water rinse
- Dilute nitric acid rinse
- Analyte-free water rinse
- Air dry

TABLE 3-1
Sampling Methodology

Chemical of Concern	Analytical Method	Sample Volume
Metals/Cyanide		
antimony	SW3050/SW6010A	240 ml (8 oz)
arsenic	SW3050/SW6010A	240 ml (8 oz)
barium	SW3050/SW6010A	240 ml (8 oz)
cadmium	SW3050/SW6010A	240 ml (8 oz)
chromium	SW3050/SW6010A	240 ml (8 oz)
copper	SW3050/SW6010A	240 ml (8 oz)
lead	SW3050/SW6010A	240 ml (8 oz)
mercury	SW7470A	240 ml (8 oz)
nickel	SW3050/SW6010A	240 ml (8 oz)
silver	SW3050/SW6010A	240 ml (8 oz)
thallium	SW3050/SW6010A	240 ml (8 oz)
cyanide	SW9010A	240 ml (8 oz)
Volatile Organics		
1,1-dichloroethane	SW 846 8260	120 ml (4 oz)
1,2-dichloroethane	SW 846 8260	120 ml (4 oz)
1,1-dichloroethene	SW 846 8260	120 ml (4 oz)
1,2-dichloroethene	SW 846 8260	120 ml (4 oz)
1,1,1 trichloroethene	SW 846 8260	120 ml (4 oz)
trans-1,2-dichloroethene	SW 846 8260	120 ml (4 oz)
1,2 dichloropropane	SW 846 8260	120 ml (4 oz)
carbon tetrachloride	SW 846 8260	120 ml (4 oz)
chloroform	SW 846 8260	120 ml (4 oz)
methylene chloride	SW 846 8260	120 ml (4 oz)
tetrachloroethene (PCE)	SW 846 8260	120 ml (4 oz)
tetrahydrofuran	SW 846 8260	120 ml (4 oz)
toluene	SW 846 8260	120 ml (4 oz)
1,1,2 trichloroethane (TCA)	SW 846 8260	120 ml (4 oz)
trichlorobenzene	SW 846 8260	120 ml (4 oz)
trichloroethene (TCE)	SW 846 8260	120 ml (4 oz)
trichlorofluoromethane	SW 846 8260	120 ml (4 oz)
vinyl chloride	SW 846 8260	120 ml (4 oz)
Semivolatile Organics		
n-nitrosodiphenylamine	SW 846 8270	240 ml (8 oz)
benzo(a)athracene	SW 846 8270	240 ml (8 oz)
benzo(b)fluoranthene	SW 846 8270	240 ml (8 oz)
benzo(k)fluoranthene	SW 846 8270	240 ml (8 oz)
benzo(a)pyrene	SW 846 8270	240 ml (8 oz)
benzo(g,h,i)perylene	SW 846 8270	240 ml (8 oz)
1,2,4-trichloroenzene	SW 846 8270	240 ml (8 oz)
Exlposives		
RDX	SW 846 8330	240 ml (8 oz)
HMX	SW 846 8330	240 ml (8 oz)
2,4,6-trinitrotoluene	SW 846 8330	240 ml (8 oz)
2,6-dinitrotoluene	SW 846 8330	240 ml (8 oz)
2,4-dinitrotoluene	SW 846 8330	240 ml (8 oz)
nitrobenzene	SW 846 8330	240 ml (8 oz)

All containers to consist of wide-mouth glass jar with teflon-lined lid
Samples to be preserved by cooling to 4 degrees C.
All holding times will be 24 hours.

All decontamination fluids will be discharged onto the ground at the site. Nitric acid rinsate will be collected and neutralized prior to discharge.

3.3 SAMPLE HANDLING

Sample handling includes the field-related considerations concerning sample identification, packaging, and shipping; the selection of sample containers and preservatives; allowable holding items and analysis requested.

The EPA User's Guide to the Contract Laboratory Program (EPA, December 1986) and the Federal Register (EPA, October 26, 1984) address the topics of containers and sample preservations.

3.3.1 Sampling Identification System

Each sample collected will be assigned a unique sample tracking number. This three to four segment alphanumeric code will identify the location and QA designation, if required.

The alphanumeric code to be used in the sampling event is as follows:

(AANN)	-	(NN)	-	(NN)
[Sample Location]		[Sample Area]		[Sample Number]

Sample Location:

LWi = Leaching Well Number (i.e., LW01, LW02)
DPi = Site 8 Disposal Pit Number 1
DLi = Drainage Line Number

Sample Area:

08 = Site 8
09 = Site 9
11 = Site 11

Sample Number:

01 through 50 = A sequential ordering of samples taken.

Information regarding sample labels and tags to be attached before shipment to a laboratory is contained in the B&R Environmental SOP in Appendix B.

3.3.2 Sample Packaging and Shipping

Samples will be packaged and shipped in accordance with B&R Environmental SOP. The BRE field personnel will be responsible for completion of the following forms:

- Sample labels
- Chain-of-custody forms
- Appropriate labels applied to shipping coolers
- Chain-of-custody labels

It is anticipated that the laboratory to be used for the analytical work will provide delivery of sample bottles and pickup of samples on a daily basis.

3.4 SAMPLE CUSTODY

Custody of samples must be maintained and documented at all times. Chain-of-custody begins with the collection of the samples in the field. B&R Environmental SOPs, provide a description of the chain-of-custody procedures to be followed. A sample chain-of-custody form is contained in Appendix A.

4.0 PROJECT MANAGEMENT PLAN

B&R Environmental will perform this project with Navy support. This section of the PRVSP describes the project organization, Navy contacts and support, and a project contingency plan.

4.1 PROJECT ORGANIZATION

B&R Environmental program management staff are responsible for overseeing all technical and administrative activities for individual projects.

The B&R Environmental Project Manager, Mr. Scott Nesbit, P.E., will be responsible for the day-to-day management of this assignment and the overall quality of the project. He will be responsible for assuring compliance with this document and for communication of important decisions and developments to project participants. He will be the primary liaison with the EFA Chesapeake Remedial Project Manager (RPM), Ms. Donna Jordan and the Navy Resident Officer in Charge of Construction (ROICC).

The project organization chart for this project is shown on Figure 4-1. As shown on that figure, Mr. Nesbit will be assisted on this project by the necessary personnel to perform this project. The organization chart only presents project-specific personnel; CLEAN program management staff will oversee the overall project and provide program management support. The project will be staffed with personnel from the Pittsburgh and Gaithersburg offices of B&R Environmental. Support personnel from other offices may be utilized on an as-needed basis.

Mr. Scott Nesbit is the primary contact and project manager for CTO 180. He will manage the day-to-day aspects of this project and will be responsible for cost and schedule control as well as technical performance. Mr. Nesbit has more than 10 years of experience on civil and environmental engineering projects.

Mr. Robert DeLisio will be the Project Engineer. Mr. DeLisio has experience in both design and construction. Mr. DeLisio performed much of the design work for this project.

As shown on Figure 4-1, other technical expertise will be provided as required by the project.

FIGURE 4-1

PROJECT ORGANIZATION CHART

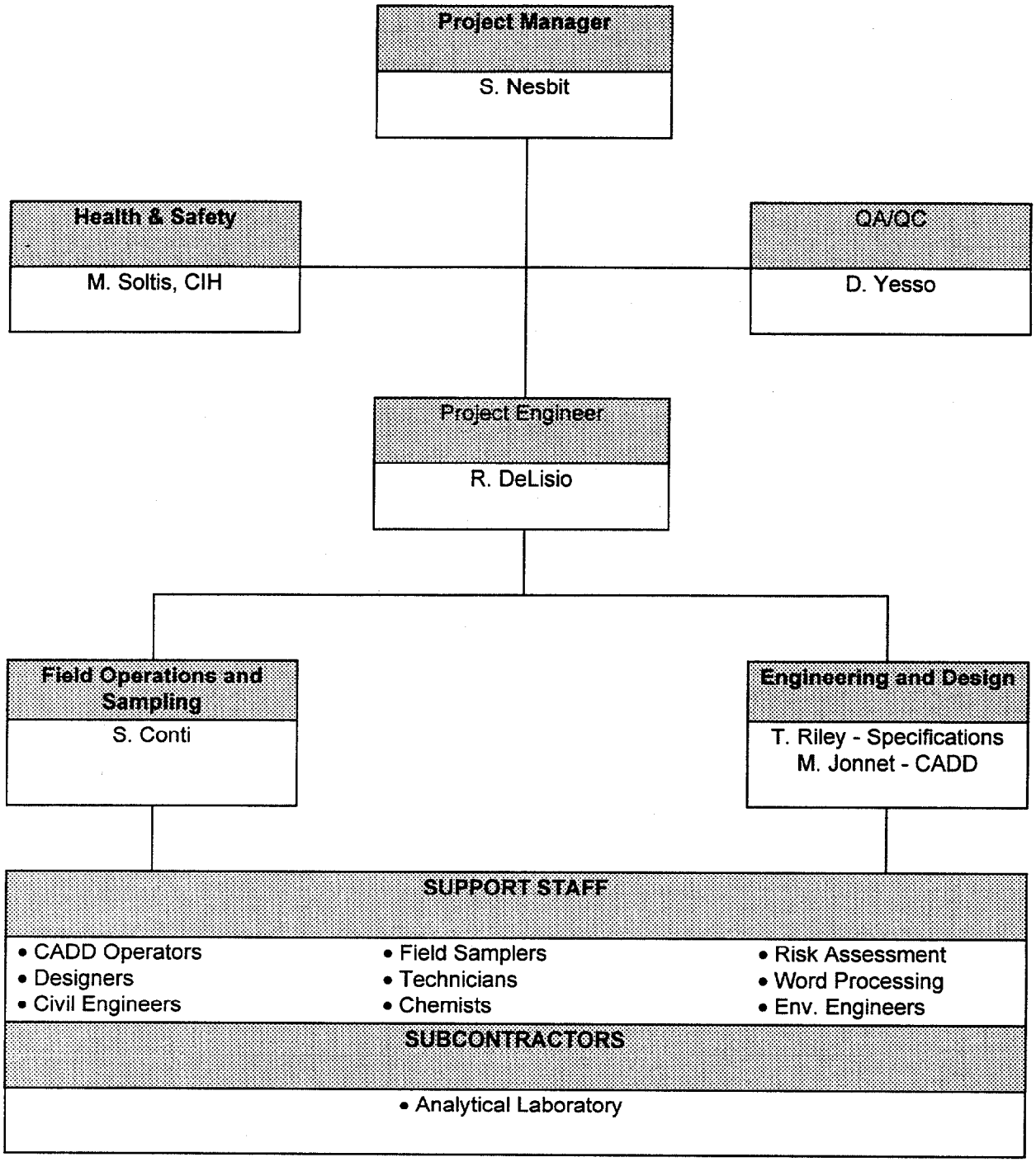

4.2 NAVY SUPPORT

Ms. Donna Jordan will be the Navy EFACHES Remedial Project Manager (RPM) for this project. She will be the primary Navy point of contact for the project. All project activities including reporting and field activities will be coordinated through Ms. Jordan. Any changes in scope will be approved through Ms. Jordan prior to implementation. Ms. Jordan may be contacted at the following address:

Ms. Donna Jordan Code 181
Engineering Field Activity - Chesapeake
Naval Facilities Engineering Command
Washington Naval Yard, Building 212
901 M Street, S. E.
Washington, DC 20374-5018
(202) 685-3303

Ensign Sabrina G. Durant will be the Navy Resident Officer in Charge of Construction for this project. Ensign Durant may be contacted at:

Ensign Sabrina G. Durant
National Naval Medical Command
Building 241
Bethesda, Maryland 20889-5609

Mr. Robert Ridgway will be the primary point of contact at NSWC White Oak. All field work will be coordinated through Mr. Ridgway; he will notify appropriate NSWC White Oak personnel (security, etc.) Mr. Ridgway may be contacted at the following address:

Mr. Robert Ridgway
Naval Surface Warfare Center
Environmental Office, Building 25
10901 New Hampshire Avenue
Silver Spring, Maryland 20903-5640
(301) 394-2307

4.3 LABORATORY SUBCONTRACTOR

A fixed base analytical laboratory subcontractor will be used to perform analytical work.

4.4 CONTINGENCY PLAN

In the event major problems are encountered during field activities, the B&R Environmental Project Manager will be notified immediately, followed by the NSWC White Oak Point of Contact, ROICC, and the EFACHES RPM. B&R Environmental will then develop an alternate course of action and review it with the Navy. All alternate courses of action that impact the project or project schedule and budget will be approved through the NSWC White Oak Point of Contact, the ROICC, and the EFACHES RPM before being enacted.

Accidents and major incidents will be documented on the "Contracts Report of Incident" form contained in Appendix A.

Appendix A - Forms for Field Activities

DAILY ACTIVITIES RECORD

PROJECT NAME: _____ **PROJECT NUMBER:** _____

CLIENT: _____ **LOCATION:** _____

DATE: _____ **ARRIVAL TIME:** _____

B&RE PERSONNEL: _____ **DEPARTURE TIME:** _____

CONTRACTOR: _____ **DRILLER:** _____

ITEM	QUANTITY ESTIMATE	QUANTITY TODAY	PREVIOUS TOTAL QUANTITY	CUMULATIVE QUANTITY TO DATE

COMMENTS: _____

_____

_____

_____

APPROVED BY:

_____ _____

B&RE REPRESENTATIVE DRILLER

DATE: _____

Brown & Root Environmental

EQUIPMENT CALIBRATION LOG

INSTRUMENT NAME / MODEL : _____

JOB NAME : _____

MANUFACTURER : _____

JOB NUMBER : _____

CALIBRATION DATE	INITIAL SETTINGS	STANDARDS USED	PROCEDURE	ADJUSTMENTS MADE	FINAL SETTINGS	SIGNATURE	COMMENTS

SINGLE SAMPLE LOG SHEET

Page ____ of ____

Project Site Name: _____

Project No.: _____

- ☐ Surface Soil
- ☐ Subsurface Soil
- ☐ Sediment
- ☐ Other _____
- ☐ QA Sample Type: _____

Sample ID No.: _____

Sample Location: _____

Sampled By: _____

C.O.C. No.: _____

Sample Method:	Composite Sample Data		
	Sample	Time	Color/Description
Depth Sampled:			
Sample Date and Time:			
Type of Sample			
☐ Grab			
☐ Composite			
☐ Grab-Composite	Grab Sample Data		
☐ High Concentration	Color	Description: (Sand, Clay, Dry, Moist, Wet, etc.)	
☐ Low Concentration			

Analysis	Container Requirements	Collected (✓)	Map:

Observations/Notes:

Circle if Applicable:		Signature(s):
MS/MSD	Duplicate ID No:	

D-48-3-92-16

HALLIBURTON NUS

CHAIN OF CUSTODY RECORD

PROJECT NO.:

SITE NAME:

SAMPLERS (SIGNATURE):

STATION NO.	DATE	TIME	COMP	GRAB	STATION LOCATION	NO. OF CONTAINERS							REMARKS

RELINQUISHED BY (SIGNATURE):	DATE/TIME:	RECEIVED BY (SIGNATURE):	RELINQUISHED BY (SIGNATURE):	DATE/TIME:	RECEIVED BY (SIGNATURE):
RELINQUISHED BY (SIGNATURE):	DATE/TIME:	RECEIVED BY (SIGNATURE):	RELINQUISHED BY (SIGNATURE):	DATE/TIME:	RECEIVED BY (SIGNATURE):
RELINQUISHED BY (SIGNATURE):	DATE/TIME:	RECEIVED FOR LABORATORY BY (SIGNATURE):	DATE/TIME:	REMARKS:	

NUS 4411 (4-0484)

HALLIBURTON NUS
Environmental Corporation

PROJECT_____

SAMPLE NO._____

DATE:____/____/____ TIME:_____hrs.

MEDIA: WATER ☐ SOIL ☐ SEDIMENT ☐_____☐

CONCENTRATION: LOW ☐ MED ☐ HIGH ☐

TYPE: GRAB ☐ COMPOSITE ☐

ANALYSIS	PRESERVATION
VOA ☐ BNA's ☐	Cool to 4°C ☐
PCB's ☐ PESTICIDES ☐	HNO_3 TO pH < 2 ☐
METALS: TOTAL ☐ DISSOLVED ☐	NAOH TO pH > 12 ☐
CYANIDE ☐	HCL ☐
_____ ☐	_____ ☐

Sampled By_____

Remarks:

CUSTODY SEAL

Date

Signature

CUSTODY SEAL

Date

Signature

CUSTODY SEAL

Date

Signature

Appendix B - Brown and Root Environmental Standard Operating Procedures

TABLE OF CONTENTS

SECTION **PAGE**

1.0 PURPOSE 2

2.0 SCOPE 2

3.0 GLOSSARY 2

4.0 RESPONSIBILITIES 2

5.0 PROCEDURES 3

5.1 Overview 3
5.2 Soil Sample Collection 3
5.2.1 Procedure for Collecting Volatile Soil Samples 3
5.2.2 Procedure for Collecting Non-Volatile Soil Samples 4
5.2.3 Procedure for Collecting Undisturbed Soil Samples (ASTM D1587-83) 4
5.3 Surface Soil Sampling 5
5.4 Near-Surface Soil Sampling 6
5.5 Subsurface Soil Sampling with a Hand Auger 6
5.6 Subsurface Soil Sampling with a Split-Barrel Sampler (ASTM D1586-84) 7
5.7 Excavation and Sampling of Test Pits and Trenches 8
5.7.1 Applicability 8
5.7.2 Test Pit and Trench Excavation 9
5.7.3 Sampling in Test Pits and Trenches 10
5.7.4 Backfilling of Trenches and Test Pits 14
5.8 Records 15

6.0 REFERENCES 15

ATTACHMENTS

A SPLIT-SPOON SAMPLER 16
B REMOTE SAMPLE HOLDER FOR TEST PIT/TRENCH SAMPLING 17
C-1 SINGLE SAMPLE LOG SHEET (SOIL) 18
C-2 MULTIPLE SAMPLE LOG SHEET (SOIL) 19
D TEST PIT LOG 20

1.0 PURPOSE

This procedure discusses the methods used to collect surface, near surface, and subsurface soil samples. Additionally, it describes the method for sampling of test pits and trenches to determine subsurface soil and rock conditions, and recover small-volume or bulk samples.

2.0 SCOPE

This procedure is applicable to the collection of surface, near surface and subsurface soils for laboratory testing, which are exposed through hand digging, hand augering, drilling,or machine excavating at hazardous substance sites.

3.0 GLOSSARY

Composite Sample - A composite sample exists as a combination of more than one sample at various locations and/or depths and times, which is homogenized and treated as one sample. This type of sample is usually collected when determination of an average waste concentration for a specific area is required. Composite samples are not to be collected for volatile organics analysis.

Grab Sample - One sample collected at one location and at one specific time.

Non-Volatile Sample - A non-volatile sample includes all other chemical parameters (e.g., semivolatiles, pesticides/PCBs, metals, etc.) and those engineering parameters that do not require undisturbed soil for their analysis.

Hand Auger - A sampling device used to extract soil from the ground in a relatively undisturbed form.

Thin-Walled Tube Sampler - A thin-walled metal tube (also called a Shelby tube) used to recover relatively undisturbed soil samples. These tubes are available in various sizes, ranging from 2 to 5 inches outside diameter (OD) and from 18 to 54 inches in length.

Split-Barrel Sampler - A steel tube, split in half lengthwise, with the halves held together by threaded collars at either end of the tube. Also called a split-spoon sampler, this devise can be driven into resistant materials using a drive weight mounted in the drilling string. A standard split-barrel sampler is typically available in two common lengths, providing either 20-inch or 26-inch longitudinal clearance for obtaining 18-inch or 24-inch-long samples, respectively. These split-barrel samplers commonly range in size from 2-inch OD to 3-1/2 inch OD. The larger sizes are commonly used when a larger volume of sample material is required.

Test Pit and Trench - Open, shallow excavations, typically rectangular (if a test pit) or longitudinal (if a trench), excavated to determine the shallow subsurface conditions for engineering, geological, and soil chemistry exploration and/or sampling purposes. These pits are excavated manually or by machine (e.g., backhoe, clamshell, trencher excavator, or bulldozer).

4.0 RESPONSIBILITIES

Project Manager - The Project Manager is responsible for determining sampling objectives, as well as, the field procedures used in the collection of soil samples. Additionally, in consultation with other project personnel (geologist, hydrogeologist, etc.), the Project Manager establishes the need for test pits or trenches, and determines their approximate locations and dimensions.

Site Safety Officer (SSO) - The SSO (or a qualified designee) is responsible for air quality monitoring during sampling, boring and excavation activities, to ensure that workers and offsite (downwind) individuals are not exposed to hazardous levels of airborne contaminants. The SSO/designee may also be required to advise the FOL on other safety-related matters regarding boring, excavation and sampling, such as mitigative measures to address potential hazards from unstable trench walls, puncturing of drums or other hazardous objects, etc.

Field Operations Leader (FOL) - The FOL is responsible for finalizing the location of surface, near surface, and subsurface (hand and machine borings, test pits/trenches) soil samples. He/she is ultimately responsible for the sampling and backfilling of boreholes, test pits and trenches, and for adherence to OSHA regulations during these operations.

Project Geologist/Sampler - The project geologist/sampler is responsible for the proper acquisition of soil samples and the completion of all required paperwork (i.e., sample log sheets, field notebook, boring logs, test pit logs, container labels, custody seals, and chain-of-custodies).

5.0 PROCEDURES

5.1 Overview

Soil sampling is an important adjunct to groundwater monitoring. Sampling of the soil horizons above the groundwater table can detect contaminants before they have migrated into the water table, and can establish the amount of contamination sorbed on aquifer solids that have the potential of contributing to groundwater contamination.

Soil types can vary considerably on a hazardous waste site. These variations, along with vegetation, can effect the rate of contaminant migration through the soil. It is important, therefore, that a detailed record be maintained during the sampling operations, particularly noting the location, depth, and such characteristics as grain size, color, and odor. Subsurface conditions are often stable on a daily basis and may demonstrate only slight seasonal variation especially with respect to temperature, available oxygen and light penetration. Changes in any of these conditions can radically alter the rate of chemical reactions or the associated microbiological community, thus further altering specific site conditions. As a result, samples must be kept at their at-depth temperature or lower, protected from direct light, sealed tightly in approved glass containers and be analyzed as soon as possible.

The physical properties of the soil, its grain size, cohesiveness, associated moisture, and such factors as depth to bedrock and water table, will limit the depth from which samples can be collected and the method required to collect them. Often this information on soil properties can be obtained from published soil surveys available through the U.S. Geological Surveys and other government or farm agencies. It is the intent of this procedure to present the most commonly employed soil sampling methods used at hazardous waste sites.

5.2 Soil Sample Collection

5.2.1 Procedure for Collecting Volatile Soil Samples

Volatile samples are only collected as grab samples and maintained and handled in as near an undisturbed state as possible. The sample is transferred directly into an approved glass container with a teflon lined cap. The sample must be packed down as much as possible to reduce air space within the sample container to an absolute minimum. Also, a properly filled volatile organics sample container will have no head space.

5.2.2 Procedure for Collecting Non-Volatile Soil Samples

Non-volatile soil samples may be collected as either grab or composite samples. The non-volatile soil sample is thoroughly mixed in a stainless steel or disposable, inert plastic tray, using a stainless steel trowel or other approved tool, then transferred into the appropriate sample container(s). Head space is permitted in a non-volatile soil sample container to allow for sample expansion.

5.2.3 Procedure for Collecting Undisturbed Soil Samples (ASTM D1587-83)

When it is necessary to acquire undisturbed samples of soil for purposes of engineering parameter analysis (e.g., permeability), a thin-walled, seamless tube sampler (Shelby tube) will be employed. The following method will be used:

1. Remove all surface debris (e.g., vegetation, roots, twigs, etc.) from the specific sampling location and drill and clean out the borehole to the sampling depth, being careful to minimize the chance for disturbance of the material to be sampled. In saturated material, withdraw the drill bit slowly to prevent loosening of the soil around the borehole and to maintain the water level in the hole at or above groundwater level.

2. The use of bottom discharge bits or jetting through an open-tube sampler to clean out the borehole shall not be allowed. Use of any side-discharge bits is permitted.

3. A stationary piston-type sampler may be required to limit sample disturbance and aid in retaining the sample. Either the hydraulically operated or control rod activated-type of stationary piston sampler may be used. Prior to inserting the tube sampler into the borehole, check to ensure that the sampler head contains a check valve. The check valve is necessary to keep water in the rods from pushing the sample out the tube sampler during sample withdrawal and to maintain a suction within the tube to help retain the sample.

4. To minimize chemical reaction between the sample and the sampling tube, brass tubes may be required, especially if the tube is stored for an extended time prior to testing. While steel tubes coated with shellac are less expensive than brass, they're more reactive, and shall only be used when the sample will be tested within a few days after sampling or if chemical reaction is not anticipated. With the sampling tube resting on the bottom of the hole and the water level in the boring at groundwater level or above, push the tube into the soil by a continuous and rapid motion, without impacting or twisting. In no case shall the tube be pushed farther than the length provided for the soil sample. Allow about 3 inches in the tube for cuttings and sludge.

5. Upon removal of the sampling tube from the hole, measure the length of sample in the tube and also the length penetrated. Remove disturbed material in the upper end of the tube and measure the length of sample again. After removing at least an inch of soil from the lower end and after inserting an impervious disk, seal both ends of the tube with at least a 1/2-inch thickness of wax applied in a way that will prevent the wax from entering the sample. Clean filler must be placed in voids at either end of the tube prior to sealing with wax. Place plastic caps on the ends of the sample tube, tape the caps in place, and dip the ends in wax.

6. Affix label(s) to the tube as required and record sample number, depth, penetration, and recovery length on the label. Mark the "up" direction on the side of the tube with indelible ink, and mark the end of the sample. Complete Chain-of-Custody and other required forms (see SOP SA-6.2). Do not allow tubes to freeze, and store the samples vertically with the same orientation they had

in the ground, (i.e., top of sample is up) in a cool place out of the sun at all times. Ship samples protected with suitable resilient packing material to reduce shock, vibration, and disturbance.

Thin-walled undisturbed tube samplers are restricted in their usage by the consistency of the soil to be sampled. Often, very loose and/or wet samples cannot be retrieved by the samplers, and soils with a consistency in excess of very stiff cannot be penetrated by the sampler. Devices such as Denison or Pitcher core samplers can be used to obtain undisturbed samples of stiff soils. Using these devices normally increases sampling costs, and therefore their use shall be weighed against the need for acquiring an undisturbed sample.

5.3 Surface Soil Sampling

The simplest, most direct method of collecting surface soil samples (most commonly collected to a depth of 6 inches) for subsequent analysis is by use of a stainless steel trowel.

In general, the following equipment is necessary for obtaining surface soil samples:

- Stainless steel trowel.
- Real-time air monitoring instrument (e.g., PID, FID, etc.).
- Latex gloves.
- Required Personal Protective Equipment (PPE).
- Required paperwork.
- Required decontamination equipment.
- Required sample container(s).
- Wooden stakes or pin flags.
- Sealable polyethylene bags (i.e., Ziploc baggies).
- Heavy duty cooler.
- Ice (if required) double-bagged in sealable polyethylene bags.
- Chain-of-custody records and custody seals.

When acquiring surface soil samples, the following procedure shall be used:

1. Carefully remove vegetation, roots, twigs, litter, etc., to expose an adequate soil surface area to accommodate sample volume requirements.
2. Using a decontaminated stainless steel trowel, follow the procedure cited in Section 5.2.1 for collecting a volatile soil sample.

3. Thoroughly mix (in-situ) a sufficient amount of soil to fill the remaining sample containers and transfer the sample into those containers utilizing the same stainless steel trowel employed above. Cap and securely tighten all sample containers.

4. Affix a sample label to each container. Be sure to fill out each label carefully and clearly, addressing all the categories described in SOP SA-6.1.

5. Proceed with the handling and processing of each sample container as described in SOP SA-6.2.

5.4 Near-Surface Soil Sampling

Collection of samples from near the surface (depth of 6-18 inches) can be accomplished with tools such as shovels and stainless steel trowels.

The following equipment is necessary to collect near surface soil samples:

- Clean shovel.
- Plus the equipment listed under Section 5.3 of this procedure.

To obtain near-surface soil samples, the following protocol shall be observed:

1. With a clean shovel, make a series of vertical cuts to the depth required in the soil to form a square approximately 1 foot by 1 foot.

2. Lever out the formed plug and scrape the bottom of the freshly dug hole with a decontaminated stainless steel trowel to remove any loose soil.

3. Follow steps 2 through 10 listed under Section 5.3 of this procedure.

5.5 Subsurface Soil Sampling With a Hand Auger

A hand augering system generally consists of a variety of all stainless steel bucket bits (i.e., cylinders 6-1/2" long, and 2-3/4", 3-1/4", and 4" in diameter), a series of extension rods (available in 2', 3', 4' and 5' lengths), and a cross handle. A larger diameter bucket bit is commonly used to bore a hole to the desired sampling depth and then withdrawn. In turn, the larger diameter bit is replaced with a smaller diameter bit, lowered down the hole, and slowly turned into the soil at the completion depth (approximately 6"). The apparatus is then withdrawn and the soil sample collected.

The hand auger can be used in a wide variety of soil conditions. It can be used to sample soil both from the surface, or to depths in excess of 12 feet. However, the presence of rock layers and the collapse of the borehole normally contribute to its limiting factors.

To accomplish soil sampling using a hand augering system, the following equipment is required:

- Complete hand auger assembly (variety of bucket bit sizes).
- Stainless steel mixing bowls.
- Plus the equipment listed under Section 5.3 of this procedure.

To obtain soil samples using a hand auger, the following procedure shall be followed:

1. Attach a properly decontaminated bucket bit to a clean extension rod and further attach the cross handle to the extension rod.

2. Clear the area to be sampled of any surface debris (vegetation, twigs, rocks, litter, etc.).

3. Begin augering (periodically removing accumulated soils from the bucket bit) and add additional rod extensions as necessary. Also, note (in a field notebook or on standardized data sheets) any changes in the color, texture or odor of the soil.

4. After reaching the desired depth, slowly and carefully withdraw the apparatus from the borehole.

5. Remove the soiled bucket bit from the rod extension and replace it with another properly decontaminated bucket bit. The bucket bit used for sampling is commonly smaller in diameter than the bucket bit employed to initiate the borehole.

6. Carefully lower the apparatus down the borehole. Care must be taken to avoid scraping the borehole sides.

7. Slowly turn the apparatus until the bucket bit is advanced approximately 6 inches.

8. Discard the top of the core (approximately 1"), which represents any loose material collected by the bucket bit before penetrating the sample material.

9. Fill volatile sample container(s), using a properly decontaminated stainless steel trowel, with sample material directly from the bucket bit. Refer to Section 5.2.1 of this procedure.

10. Utilizing the above trowel, remove the remaining sample material from the bucket bit and place into a properly decontaminated stainless steel mixing bowl and thoroughly homogenize the sample material prior to filling the remaining sample containers. Refer to Section 5.2.2 of this procedure.

11. Follow steps 4 through 10 listed under Section 5.3 of this procedure.

5.6 Subsurface Soil Sampling With a Split-Barrel Sampler (ASTM D1586-84)

Split-barrel (split-spoon) samplers consist of a heavy carbon steel or stainless steel sampling tube that can be split into two equal halves to reveal the soil sample (see Attachment A). A drive head is attached to the upper end of the tube and serves as a point of attachment for the drill rod. A removable tapered nosepiece/drive shoe attaches to the lower end of the tube and facilitates cutting. A basket-like sample retainer can be fitted to the lower end of the split tube to hold loose, dry soil samples in the tube when the sampler is removed from the drill hole. This split-barrel sampler is made to be attached to a drill rod and forced into the ground by means of a 140-lb. or larger casing driver.

Split-barrel samplers are used to collect soil samples from a wide variety of soil types and from depths greater than those attainable with other soil sampling equipment.

The following equipment is used for obtaining split-barrel samples:

- Drilling equipment (provided by subcontractor).
- Split-barrel samplers (O.D. 2 inches, I.D. 1-3/8 inches, either 20 inches or 26 inches long); Larger O.D. samplers are available if a larger volume of sample is needed.
- Drive weight assembly, 140-lb. weight, driving head and guide permitting free fall of 30 inches.
- Stainless steel mixing bowls.
- Plus equipment listed under Section 5.3 of this procedure.

The following steps shall be followed to obtain split-barrel samples:

1. Refer to SOP GH-1.3 for a detailed description of the steps involved in the retrieval of a split-barrel sampler.
2. Remove the drive head and nosepiece, and open the sampler to reveal the soil sample. Immediately scan the sample core with a real-time air monitoring instrument (e.g., OVA, HNU, etc.). Carefully separate the soil core, with a decontaminated stainless steel knife or trowel, at about 6-inch intervals while scanning the center of the core for elevated readings. Also scan stained soil, soil lenses, and anomalies (if present), and record readings.
3. Collect the volatile sample from the center of the core where elevated readings occurred. If no elevated readings where encountered the sample material should still be collected from the core's center (this area represents the least disturbed area with minimal atmospheric contact). Refer to Section 5.2.1 of this procedure.
4. Using the same trowel, remove remaining sample material from the split-barrel sampler (except for the small portion of disturbed soil usually found at the top of the core sample) and place the soil into a decontaminated stainless steel mixing bowl. Thoroughly homogenize the sample material prior to filling the remaining sample containers. Refer to Section 5.2.2 of this procedure.
5. Follow steps 4 through 10 listed under Section 5.3.3 of this procedure.

5.7 Excavation and Sampling of Test Pits and Trenches

5.7.1 Applicability

This subsection presents routine test pit or trench excavation techniques and specialized techniques that are applicable under certain conditions.

During the excavation of trenches or pits at hazardous waste sites, several health and safety concerns arise which control the method of excavation. All excavations that are deeper than 4 feet must be stabilized (before entry into the excavation) by bracing the pit sides using wooden or steel support structures. Personnel entering the excavation may be exposed to toxic or explosive gases and oxygen-deficient environments. In these cases, substantial air monitoring is required before entry, and appropriate respiratory gear and protective clothing is mandatory. There must be at least two persons

present at the immediate site before entry by one of the investigators. The reader shall refer to OSHA regulations 29 CFR 1926, 29 CFR 1910.120, and 29 CFR 1910.134.

Excavations are generally not practical where a depth of more than about 15 feet is desired, and they are usually limited to a few feet below the water table. In some cases, a pumping system may be required to control water levels within the pit, providing that pumped water can be adequately stored or disposed. If data on soils at depths greater than 15 feet are required, the data are usually obtained through test borings instead of test pits.

In addition, hazardous wastes may be brought to the surface by excavation equipment. This material, whether removed from the site or returned to the subsurface, must be properly handled according to any and all applicable federal, state, and local regulations.

5.7.2 Test Pit and Trench Excavation

These procedures describe the methods for excavating and logging test pits and trenches excavated to determine subsurface soil and rock conditions. Test pit operations shall be logged and documented as described in SOP SA-6.1.

Test pits and trenches may be excavated by hand or by power equipment to permit detailed description of the nature and contamination of the in-situ materials. The size of the excavation will depend primarily on the following:

- The purpose and extent of the exploration.
- The space required for efficient excavation.
- The chemicals of concern.
- The economics and efficiency of available equipment.

Test pits normally have a cross section that is 4 to 10 feet square; test trenches are usually 3 to 6 feet wide and may be extended for any length required to reveal conditions along a specific line. The following table, which is based on equipment efficiencies, gives a rough guide for design consideration:

Equipment	Typical Widths, in Feet
Trenching machine	2
Backhoe	2-6
Track dozer	10
Track loader	10
Excavator	10
Scraper	20

The lateral limits of excavation of trenches and the position of test pits shall be carefully marked on area base maps. If precise positioning is required to indicate the location of highly hazardous waste materials, nearby utilities, or dangerous conditions, the limits of the excavation shall be surveyed. Also, if precise determination of the depth of buried materials is needed for design or environmental assessment purposes, the elevation of the ground surface at the test pit or trench location shall also be determined by survey. If the test pit/trench will not be surveyed immediately, it shall be backfilled and its position identified with stakes placed in the ground at the margin of the excavation for later surveying.

The construction of test pits and trenches shall be planned and designed in advance as much as possible. However, field conditions may necessitate revisions to the initial plans. The final depth and construction method shall be determined by the field geologist. The actual layout of each test pit, temporary staging area and spoils pile will be predicated based on site conditions and wind direction at the time the test pit is made. Prior to excavation, the area can be surveyed by magnetometer or metal detector to identify the presence of underground utilities or drums.

If the depth exceeds 4 feet and people will be entering the pit or trench, Occupational Safety and Health Administration (OSHA) requirements must be met (e.g., walls must be braced with wooden or steel braces, ladders must be in the hole at all times, and a temporary guardrail must be placed along the surface of the hole before entry. It is advisable to stay out of test pits as much as possible; if possible, the required data or samples shall be gathered without entering the pit. Samples of leachate, groundwater, or sidewall soils can be taken with telescoping poles, etc.

Dewatering may be required to assure the stability of the side walls, to prevent the bottom of the pit from heaving, and to keep the excavation dry. This is an important consideration for excavations in cohesionless material below the groundwater table. Liquids removed as a result of dewatering operations must be handled as potentially contaminated materials. Procedures for the collection and disposal of such materials should be discussed in the site-specific project plans.

5.7.3 Sampling in Test Pits and Trenches

5.7.3.1 General

Test pits and trenches are usually logged as they are excavated. Records of each test pit/trench will be made as described in SOP SA-6.2. These records include plan and profile sketches of the test pit/trench showing materials encountered, their depth and distribution in the pit/trench, and sample locations. These records also include safety and sample screening information.

Entry of test pits by personnel is extremely dangerous and shall be avoided unless absolutely necessary. Pits more than 4 feet deep must be shored prior to entry, the "buddy" system must be used, and all applicable Health and Safety and OSHA requirements must be followed.

The final depth and type of samples obtained from each test pit will be determined at the time the test pit is excavated. Sufficient samples are usually obtained and analyzed to quantify contaminant distribution as a function of depth for each test pit. Additional samples of each waste phase and any fluids encountered in each test pit may also be collected.

In some cases, samples of soil may be extracted from the test pit for reasons other than waste sampling and chemical analysis, for instance, to obtain geotechnical information. Such information would include soil types, stratigraphy, strength, etc., and could therefore entail the collection of disturbed (grab or bulk) or relatively undisturbed (hand-carved or pushed/driven) samples, which can be tested for geotechnical properties. The purposes of such explorations are very similar to those of shallow exploratory or test borings, but often test pits offer a faster, more cost-effective method of sampling than installing borings.

5.7.3.2 Sampling Equipment

The following equipment is needed for obtaining samples for chemical or geotechnical analysis from test pits and trenches:

- Backhoe or other excavating machinery.
- Shovels, picks and hand augers, stainless steel trowels.
- Sample container - bucket with locking lid for large samples; appropriate bottleware for chemical or geotechnical analysis samples.
- Polyethylene bags for enclosing sample containers; buckets.
- Remote sampler consisting of 10-foot sections of steel conduit (1-inch-diameter), hose clamps and right angle adapter for conduit (see Attachment B).

5.7.3.3 Sampling Methods

The methods discussed in this section refer to test pit sampling from grade level. If test pit entry is required, see Section 5.7.3.4.

- Excavate trench or pit in several depth increments. After each increment, the operator will wait while the sampler inspects the test pit from grade level to decide if conditions are appropriate for sampling. (Monitoring of volatiles by the SSO will also be used to evaluate the need for sampling.) Practical depth increments range from 2 to 4 feet.

The backhoe operator, who will have the best view of the test pit, will immediately cease digging if:

- Any fluid phase or groundwater seepage is encountered in the test pit.
- Any drums, other potential waste containers, obstructions or utility lines are encountered.
- Distinct changes of material are encountered.

This action is necessary to permit proper sampling of the test pit and to prevent a breach of safety protocol. Depending upon the conditions encountered, it may be required to excavate more slowly and carefully with the backhoe.

For obtaining test pit samples from grade level, the following procedure shall be followed:

- Remove loose material to the greatest extent possible with backhoe.
- Secure walls of pit if necessary. (There is seldom any need to enter a pit or trench which would justify the expense of shoring the walls. All observations and samples can generally be taken from the ground surface.)
- Samples of the test pit material are to be obtained either directly from the backhoe bucket or from the material once it has been deposited on the ground. The sampler or Field Operations Leader directs the backhoe operator to remove material from the selected depth or location within the test pit/trench. The bucket is brought to the surface and moved away

from the pit. The sampler and/or SSO then approaches the bucket and monitors its contents with a photoionization (HNU) or flame ionization (OVA) meter. The sample is collected from the center of the bucket or pile and placed in sample containers using a decontaminated stainless steel trowel or spatula.

- If a composite sample is desired, several depths or locations within the pit/trench are selected and a bucket is filled from each area. It is preferable to send individual sample bottles filled from each bucket to the laboratory for compositing under the more controlled laboratory conditions. However, if compositing in the field is required, each sample container shall be filled from materials that have been transferred into a mixing bucket and homogenized. Note that homogenization/compositing is not applicable for samples to be subjected to volatile organic analysis.

- Using the remote sampler shown in Attachment B, samples can be taken at the desired depth from the side wall or bottom of the pit. The face of the pit/trench shall first be scraped (using a long-handled shovel or hoe) to remove the smeared zone that has contacted the backhoe bucket. The sample shall then be collected directly into the sample jar, by scraping with the jar edge, eliminating the need to utilize samplers and minimizing the likelihood of cross-contamination. The sample jar is then capped, removed from the assembly, and packaged for shipment.

- Complete documentation as described in SOP SA-6.1.

5.7.3.4 <u>In-Pit Sampling</u>

Samples can also be obtained by personnel entering the test pit/trench. This is necessary when soil conditions preclude obtaining suitable samples from the backhoe bucket (e.g., excessive mixing of soils or wastes within the test pit/trench) or when samples from relatively small discrete zones within the test pit are required. This approach may also be necessary to sample any seepage occurring at discrete levels or zones in the test pit that are not accessible with remote samplers.

In general, personnel shall sample and log pits and trenches from the ground surface, except as provided for by the following criteria:

- The project will benefit significantly from the improved quality of the logging and sampling data obtained if personnel enter a pit or trench rather than conduct such operations from the ground surface.

- There is no practical alternative means of obtaining such data.

- The Site Safety Officer determines that such action can be accomplished without breaching site safety protocol. This determination will be based on actual monitoring of the pit/trench after it is dug (including, at a minimum, measurements of volatile organics, explosive gases and available oxygen).

- An experienced geotechnical professional determines that the pit/trench is stable or is made stable (by grading the sidewalls or using shoring) prior to entrance of any personnel. OSHA requirements (Reference 1) must be strictly implemented.

If these conditions are satisfied, one person will enter the pit/trench. On potentially hazardous waste sites, this individual will be dressed in safety gear as required by the conditions in the pit, usually Level B. He/she will be affixed to a safety rope and continuously monitored while in the pit.

A second individual will be fully dressed in protective clothing including a self-contained breathing device and on standby during all pit entry operations. The individual entering the pit will remain therein for as brief a period as practical, commensurate with performance of his/her work. After removing the smeared zone, samples shall be obtained with a decontaminated trowel or spoon. As an added precaution, it is advisable to keep the backhoe bucket in the test pit when personnel are working below grade. Such personnel can either stand in or near the bucket while performing sample operations. In the event of a cave-in they can either be lifted clear in the bucket, or at least climb up on the backhoe arm to reach safety.

5.7.3.5 Geotechnical Sampling

In addition to the equipment described in Section 5.7.3.2, the following equipment is needed for geotechnical sampling:

- Soil sampling equipment, similar to that used in shallow drilled boring (i.e., open tube samplers), which can be pushed or driven into the floor of the test pit.
- Suitable driving (i.e., a sledge hammer) or pushing (i.e., the backhoe bucket) equipment which is used to advance the sampler into the soil.
- Knives, spatulas, and other suitable devices for trimming hand-carved samples.
- Suitable containers (bags, jars, tubes, boxes, etc.), labels, wax, etc. for holding and safely transporting collected soil samples.
- Geotechnical equipment (pocket penetrometer, torvane, etc.) for field testing collected soil samples for classification and strength properties.

Disturbed grab or bulk geotechnical soil samples may be collected for most soils in the same manner as comparable soil samples for chemical analysis. These collected samples may be stored in jars or plastic-lined sacks (larger samples), which will preserve their moisture content. Smaller samples of this type are usually tested for their index properties to aid in soil identification and classification, while larger bulk samples are usually required to perform compaction tests.

Relatively undisturbed samples are usually extracted in cohesive soils using open tube samplers, and such samples are then tested in a geotechnical laboratory for their strength, permeability and/or compressibility. The techniques for extracting and preserving such samples are similar to those used in performing Shelby tube sampling in borings, except that the sampler is advanced by hand or backhoe, rather than by a drill rig. Also, the sampler may be extracted from the test pit by excavation around the sampler when it is difficult to pull it out of the ground. If this excavation requires entry of the test pit, the requirements described in Section 5.7.3.4 of this procedure must be followed. The open tube sampler shall be pushed or driven vertically into the floor or steps excavated in the test pit at the desired sampling elevations. Extracting tube samples horizontally from the walls of the test pit is not appropriate, because the sample will not have the correct orientation.

A sledge hammer or the backhoe may be used to drive or push the sampler or tube into the ground. Place a piece of wood over the top of the sampler or sampling tube to prevent damage during

driving/pushing of the sample. Pushing the sampler with a constant thrust is always preferable to driving it with repeated blows, thus minimizing disturbance to the sample. If the sample cannot be extracted by rotating it at least two revolutions (to shear off the sample at the bottom), hand-excavate to remove the soil from around the sides of the sampler. If hand-excavation requires entry of the test pit, the requirements in Section 5.7.3.4 of this procedure must be followed. Prepare, label, pack and transport the sample in the required manner, as described in SOP SA-6.1.

5.7.4 Backfilling of Trenches and Test Pits

Before backfilling, the onsite crew shall photograph all significant features exposed by the test pit and trench and shall include in the photograph a scale to show dimensions. Photographs of test pits shall be marked to include site number, test pit number, depth, description of feature, and date of photograph. In addition, a geologic description of each photograph shall be entered in the site logbook. All photographs shall be indexed and maintained as part of the project file for future reference.

After inspection, backfill material shall be returned to the pit under the direction of the FOL.

If a low permeability layer is penetrated (resulting in groundwater flow from an upper contaminated flow zone into a lower uncontaminated flow zone), backfill material must represent original conditions or be impermeable. Backfill could consist of a soil-bentonite mix prepared in a proportion specified by the FOL (representing a permeability equal to or less than original conditions). Backfill can be covered by "clean" soil and graded to the original land contour. Revegetation of the disturbed area may also be required.

5.8 Records

Either a single Sample Log Sheet (see Attachment C-1) or a multiple Sample Log Sheet (see Attachment C-2) must be completed by the site geologist/sampler. All soil sampling locations must be documented by tying in the location of two or more nearby permanent landmarks (building, telephone pole, fence, etc.) and shall be located on a single Sample Log Sheet, site map or field notebook. Surveying may also be necessary, depending on the project requirements. Composite samples must be recorded on the single Sample Log Sheet. Grab samples can be recorded on either the Single or Multiple Sample Log Sheets. However, if the Multiple Sample Log Sheet is used, a detailed map showing all soil sampling locations must be provided with the log sheet and must be referenced in the remarks section of the Multiple Sample Log Sheet.

Test pit logs shall contain a sketch of pit conditions (see Attachment D, Test Pit Log Form). In addition, at least one photograph with a scale for comparison shall be taken of each pit. Included in the photograph shall be a card showing the test pit number. Boreholes, test pits and trenches shall be logged by the field geologist in accordance with Procedure GH-1.4. Other data to be recorded in the field logbook include the following:

- Name and location of job.
- Date of boring and excavation.
- Approximate surface elevation.
- Total depth of boring and excavation.
- Dimensions of pit.
- Method of sample acquisition.
- Type and size of samples.
- Soil and rock descriptions.
- Photographs.
- Groundwater levels.

- Organic gas or methane levels.
- Other pertinent information, such as waste material encountered.

6.0 REFERENCES

American Society for Testing and Materials, 1987. ASTM Standards D1587-83 and D1586-84. ASTM Annual Book of Standards. ASTM. Philadelphia, Pennsylvania. Volume 4.08.

NUS Corporation, 1986. Hazardous Material Handling Training Manual.

NUS Corporation and CH2M Hill, August, 1987. Compendium of Field Operation Methods. Prepared for the U.S. EPA.

OSHA, 1979. Excavation, Trenching and Shoring 29 CFR 1926.650-653.

ATTACHMENT A
SPLIT-SPOON SAMPLER

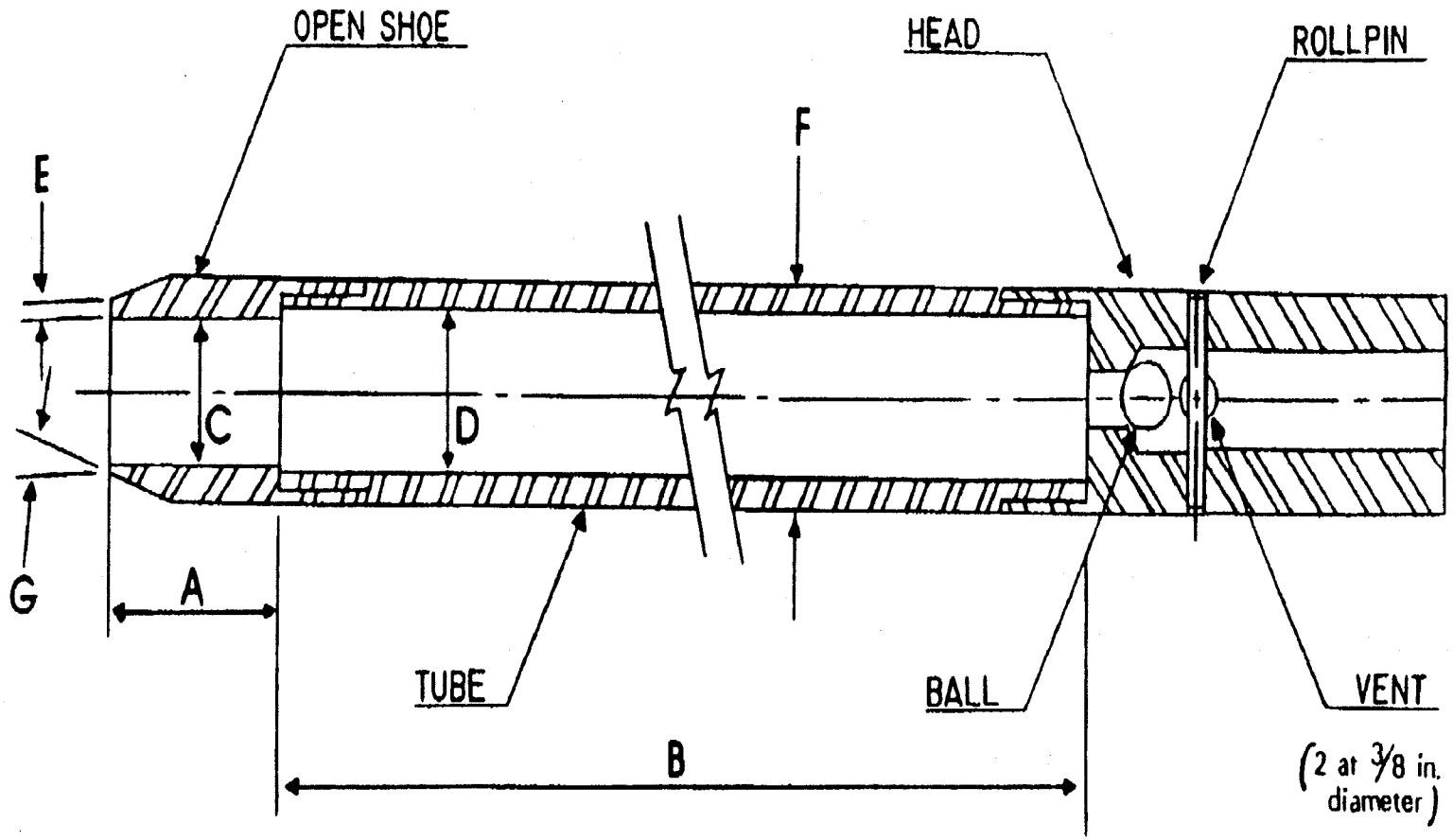

A = 1.0 to 2.0 in. (25 to 50 mm)
B = 18.0 to 30.0 in. (0.457 to 0.762 m)
C = 1.375 ± 0.005 in. (34.93 ± 0.13 mm)
D = 1.50 ± 0.05 – 0.00 in. (38.1 ± 1.3 – 0.0 mm)
E = 0.10 ± 0.02 in. (2.54 ± 0.25 mm)
F = 2.00 ± 0.05 – 0.00 in. (50.8 ± 1.3 – 0.0 mm)
G = 16.0° to 23.0°

The 1½ in. (38 mm) inside diameter split barrel may be used with a 16-gage wall thickness split liner. The penetrating end of the drive shoe may be slightly rounded. Metal or plastic retainers may be used to retain soil samples.

ATTACHMENT B
REMOTE SAMPLE HOLDER FOR TEST PIT/TRENCH SAMPLING

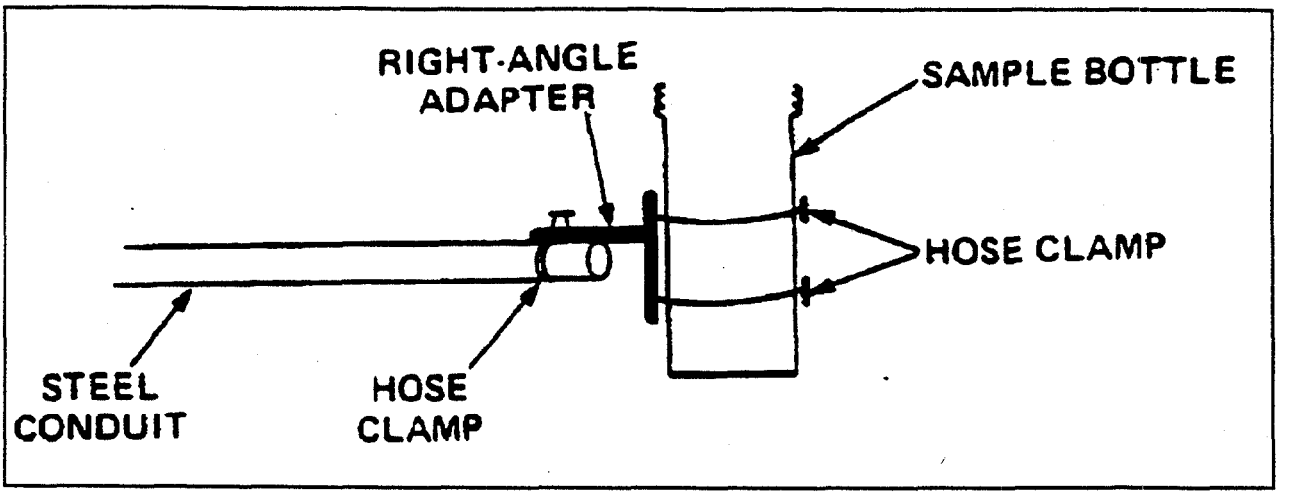

ATTACHMENT C-1
SINGLE SAMPLE LOG SHEET (SOIL)

SINGLE SAMPLE LOG SHEET

Page ____ of ____

Project Site Name: _____

Project No.: _____

- ☐ Surface Soil
- ☐ Subsurface Soil
- ☐ Sediment
- ☐ Other _____
- ☐ QA Sample Type: _____

Sample ID No.: _____

Sample Location: _____

Sampled By: _____

C.O.C. No.: _____

Sample Method:	Composite Sample Data		
	Sample	Time	Color/Description
Depth Sampled:			
Sample Date and Time:			
Type of Sample			
☐ Grab			
☐ Composite			
☐ Grab-Composite	Grab Sample Data		
☐ High Concentration	Color	Description: (Sand, Clay, Dry, Moist, Wet, etc.)	
☐ Low Concentration			

Analysis	Container Requirements	Collected (✓)	Map:

Observations/Notes:

Circle if Applicable:		Signature(s):
MS/MSD	Duplicate ID No:	

ATTACHMENT C-2
MULTIPLE SAMPLE LOG SHEET (SOIL)

Brown & Root Environmental

MULTIPLE SAMPLE LOG SHEET

☐ SURFACE SOIL
☐ SUBSURFACE SOIL
☐ SEDIMENT
☐ LAGOON/POND
☐ OTHER

PAGE ___ OF ___

SAMPLER(S) SIGNATURE _____

PROJECT NAME: _____

PROJECT NUMBER: _____

AREA DESIGNATION _____

Sample No.	SAMPLE METHOD	DEPTH (FT)	DATE	TIME	SAMPLED BY	CONCENTRATION (L)LOW (H)HIGH	(G)GRAB (C)COMPOSITE	ANALYSES							No. OF CONT. TOTAL	SOIL DESCRIPTION

REMARKS:

LAB:

COC NO:

ACAD: C:\FORMS\SAMPLOG.DWG 02/17/95 JD

ATTACHMENT D
TEST PIT LOG

TEST PIT LOG

Brown & Root Environmental

PROJECT: _____ TEST PIT NO.:

PROJECT NO _____ DATE: _____

LOCATION: _____

FIELD GEOLOGIST: _____

DEPTH (ft.)	LITHOLOGY CHANGE (Depth ft.)	MATERIAL DESCRIPTION (Soil Density / Consistency, Color)	USCS	REMARKS

Test Pit Cross Section and / or Plan View

REMARKS _____

PHOTO LOG _____ TEST PIT _____

PAGE ____ OF ____

TABLE OF CONTENTS

SECTION **PAGE**

1.0 PURPOSE 2

2.0 SCOPE 2

3.0 GLOSSARY 2

4.0 RESPONSIBILITIES 3

5.0 PROCEDURES 3

5.1 Sample Containers 3
5.2 Sample Preservation 4
5.2.1 Overview 4
5.2.2 Preparation and Addition of Reagents 4
5.3 Field Filtration 6
5.4 Sample Packaging and Shipping 6
5.4.1 Environmental Samples 6
5.4.2 Determination of Shipping Classification for Hazardous Material Samples 7
5.4.3 Packaging and Shipping of Samples Classified as Flammable (or Solid) 8
5.5 Shipment of Lithium Batteries 10

6.0 REFERENCES 11

ATTACHMENTS

A GENERAL SAMPLE CONTAINER AND PRESERVATION REQUIREMENTS 12
B ADDITIONAL REQUIRED CONTAINERS, PRESERVATION TECHNIQUES, AND HOLDING TIMES 13
C DOT HAZARDOUS MATERIAL CLASSIFICATION (49 CFR 173.2(a)) 16
D GUIDE FOR HAZARDOUS MATERIALS SHIPPERS 18
E HAZARDOUS MATERIALS SHIPPING CHECK LIST 20
F DOT SEGREGATION AND SEPARATION CHART 21
G LITHIUM BATTERY SHIPPING PAPERS 22

1.0 PURPOSE

The purpose of this Standard Operating Procedure (SOP) is to provide information on sample preservation, packaging, and shipping procedures to be used in handling environmental samples submitted for chemical constituent, biological, or geotechnical analysis. Sample chain-of-custody procedures and other aspects of field documentation are addressed in SOP SA-6.3. Sample identification is addressed in SOP CT-04.

2.0 SCOPE

This procedure:

- Describes the appropriate containers to be used for samples depending on the analyses to be performed, and the steps necessary to preserve the samples when shipped off site for chemical analysis.
- Provides instruction for sample packaging and shipping in accordance with current U.S. Department of Transportation (DOT) regulations.

3.0 GLOSSARY

Hazardous Material - A substance or material which has been determined by the Secretary of Transportation to be capable of posing an unreasonable risk to health, safety, and property when transported in commerce, and which has been so designated. Under 49 CFR, the term includes hazardous substances, hazardous wastes, marine pollutants, and elevated temperature materials, as well as materials designated as hazardous under the provisions of §172.101 and §172.102 and materials that meet the defining criteria for hazard classes and divisions in Part 173.

Hazardous Waste - Any substance listed in 40 CFR, Subpart D (~~y~~261.30 et seq.), or otherwise characterized as ignitable, corrosive, reactive, or toxic (as defined by Toxicity Characteristic Leaching Procedure, TCLP, analysis) as specified under 40 CFR, Subpart C (~~y~~261.20 et seq.), that would be subject to manifest requirements specified in 40 CFR 262. Such substances are defined and regulated by EPA.

Marking - A descriptive name, identification number, instructions, cautions, weight, specification or UN marks, or combination thereof required on outer packaging of hazardous materials.

n.o.i - Not otherwise indicated (may be used interchangeably with n.o.s.).

n.o.s. - Not otherwise specified.

ORM - Other regulated material (see DOT 49 CFR 173.144).

Packaging - A receptacle and any other components or materials necessary for compliance with the minimum packaging requirements of 49 CFR 174, including containers (other than freight containers or overpacks), portable tanks, cargo tanks, tank cars, and multi-unit tank-car tanks to perform a containment function in conformance with the minimum packaging requirements of 49 CFR 173.24(a) & (b).

Placard - Color-coded, pictorial sign which depicts the hazard class symbol and name and which is placed on the side of a vehicle transporting certain hazardous materials.

Common Preservatives:

- Hydrochloric Acid - HCl
- Sulfuric Acid - H_2SO_4
- Nitric Acid - HNO_3
- Sodium Hydroxide - NaOH

Other Preservatives

- Zinc Acetate
- Sodium Thiosulfate - $Na_2S_2O_3$

Normality (N) - Concentration of a solution expressed as equivalent per liter, an equivalent being the amount of a substance containing 1 gram-atom of replaceable hydrogen or its equivalent. Thus, a one-molar solution of HCl, containing 1 gram-atom of H, is "one normal," whereas a one-molar solution of H_2SO_4, containing 2 gram-atoms of H, is "two normal."

Reportable Quantity (RQ) - For the purposes of this SOP, means the quantity specified in column 3 of the Appendix to DOT 49 CFR §172.101 for any material identified in column 1 of the appendix. A spill greater than the amount specified must be reported to the National Response Center.

Sample - A sample is physical evidence collected from a facility or the environment, which is representative of conditions at the location and time of collection.

4.0 RESPONSIBILITIES

Field Operations Leader - Directly responsible for the bottling, preservation, labeling, packaging, shipping, and custody of samples up to and including release to the shipper.

Field Samplers - Responsible for initiating the Chain-of-Custody Record (per SOP SA-6.3), implementing the packaging and shipping requirements, and maintaining custody of samples until they are relinquished to another custodian or to the common carrier.

5.0 PROCEDURES

Sample identification, labeling, documentation, and chain-of-custody are addressed by SOP SA-6.3.

5.1 Sample Containers

Different types of chemicals react differently with sample containers made of various materials. For example, trace metals adsorb more strongly to glass than to plastic, whereas many organic chemicals may dissolve various types of plastic containers. Attachments A and B show proper containers (as well as other information) per 40 CFR 136. In general, the sample container shall allow approximately 5-10 percent air space ("ullage") to allow for expansion/vaporization if the sample warms during transport. However, for collection of volatile organic compounds, head space shall be omitted. The analytical laboratory will generally provide certified-clean containers for samples to be analyzed for chemical constituents. Shelby tubes or other sample containers are generally provided by the driller for samples requiring geotechnical analysis. Sufficient lead time shall be allowed for a delivery of bottle orders. Therefore, it is critical to use the correct container to maintain the integrity of the sample prior to analysis.

Once opened, the container must be used at once for storage of a particular sample. Unused but opened containers are to be considered contaminated and must be discarded; because of the potential for introduction of contamination, they cannot be reclosed and saved for later use. Likewise, any unused containers which appear contaminated upon receipt, or which are found to have loose caps or a missing Teflon liner (if required for the container), shall be discarded.

5.2 Sample Preservation

Many water and soil samples are unstable and therefore require preservation to prevent changes in either the concentration or the physical condition of the constituent(s) requiring analysis. Although complete and irreversible preservation of samples is not possible, preservation does retard the chemical and biological changes that inevitably take place after the sample is collected. Preservation techniques are usually limited to pH control, chemical addition(s), and refrigeration/ freezing (certain biological samples only).

5.2.1 Overview

The preservation techniques to be used for various analytes are listed in Attachments A and B. Reagents required for sample preservation will either be added to the sample containers by the laboratory prior to their shipment to the field or be added in the field (in a clean environment). Only high purity reagents shall be used for preservation. In general, aqueous samples of low-concentration organics (or soil samples of low- or medium-concentration organics) are cooled to 4°C. Medium-concentration aqueous samples and high-hazard organics samples are typically not preserved. Low-concentration aqueous samples for metals are acidified with HNO_3, whereas medium-concentration and high-hazard aqueous metal samples are not preserved. Low- or medium-concentration soil samples for metals are cooled to 4°C, whereas high-hazard samples are not preserved.

The following subsections describe the procedures for preparing and adding chemical preservatives. Attachments A and B indicate the specific analytes which require these preservatives.

5.2.2 Preparation and Addition of Reagents

Addition of the following acids or bases may be specified for sample preservation; these reagents shall be analytical reagent (AR) grade or purer and shall be diluted to the required concentration with deionized water before field sampling commences. To avoid uncontrolled reactions, be sure to Add Acid to water (not vice versa). A dilutions guide is provided below.

Acid/Base	Dilution	Concentration	Estimated Amount Required for Preservation
Hydrochloric Acid (HCl)	1 part concentrated HCl: 1 part double-distilled, deionized water	6N	5-10 mL
Sulfuric Acid (H_2SO_4)	1 part concentrated H_2SO_4: 1 part double-distilled, deionized water	18N	2 - 5 mL
Nitric Acid (HNO_3)	Undiluted concentrated HNO_3	16N	2 - 5 mL
Sodium Hydroxide (NaOH)	400 grams solid NaOH dissolved in 870 mL double-distilled, deionized water; yields 1 liter of solution	10N	2 mL

The amounts required for preservation shown in the above table assumes proper preparation of the preservative and addition of the preservative to one liter of aqueous sample (assuming that the sample is initially at pH 7, is poorly buffered, and does not contain particulate matter; as these conditions vary, more preservative may be required). Consequently, the final sample pH must be checked using narrow-range pH paper, as described in the generalized procedure detailed below:

- Pour off 5-10 mL of sample into a dedicated, clean container. Use some of this sample to check the initial sample pH using wide range (0-14) pH paper. Never dip the pH paper into the sample; always apply a drop of sample to the pH paper using a clean stirring rod or pipette.

- Add about one-half of the estimated preservative required to the original sample bottle. Cap and invert gently several times to mix. Check pH (as described above) using medium range pH paper (pH 0-6 or pH 7.5-14, as applicable).

- Cap sample bottle and seal securely.

Additional considerations are discussed below:

- To text if ascorbic acid must be used to remove oxidizing agents present in the sample before it can be properly preserved, place a drop of sample on KI-starch paper. A blue color indicates the need for ascorbic acid addition.

  If required, add a few crystals of ascorbic acid to the sample and retest with the KI-starch paper. Repeat until a drop of sample produces no color on the KI-starch paper. Then add an additional 0.6 grams of ascorbic acid per each liter of sample volume.

  Continue with proper base preservation of the sample as described, generally, above.

- Samples for sulfide analysis must be treated by the addition of 4 drops (0.2 mL) of 2N zinc acetate solution per 100 ml of sample.

  The 2N zinc acetate solution is made by dissolving 220 grams of zinc acetate in 870 mL of double-distilled, deionized water to make 1 liter of solution.

  The sample pH is then raised to 9 using the NaOH preservative.

- To test of sodium thiosulfate must be added to remove residual chlorine from a sample, test the sample for residual chlorine using a field test kit especially made for this purpose.

  If residual chlorine is present, add 0.08 grams of sodium thiosulfate per liter of sample to remove the residual chlorine.

  Continue with proper acidification of the sample as described, generally, above.

For biological samples, 10% buffered formalin or isopropanol may also be required for preservation. Questions regarding preservation requirements should be resolved through communication with the laboratory <u>before</u> sampling begins.

5.3 Field Filtration

At times, field-filtration may be required to provide for the analysis of dissolved chemical constituents. Field-filtration must be performed prior to the preservation of samples as described above. General procedures for field filtration are described below:

- The sample shall be filtered through a non-metallic, 0.45-micron membrane filter, immediately after collection. The filtration system shall consist of dedicated filter canister, dedicated silicon tubing, and a peristaltic pump with pressure or vacuum pumping squeeze action (since the sample is filtered by mechanical peristalsis, the sample travels only through the tubing).

- To perform filtration, thread the silicon tubing through the peristaltic pump head. Attach the filter canister to the discharge end of the silicon tubing (note flow direction arrow); attach the aqueous sample container to the intake end of the silicon tubing. Turn the peristaltic pump on and perform filtration.

- Continue by preserving the filtrate (contained in the filter canister), as applicable and generally described above.

5.4 Sample Packaging and Shipping

Samples collected for shipment from a site shall be classified as either environmental or hazardous material samples. Samples from drums containing materials other than Investigative Derived Waste (IDW) and samples obtained from waste piles or bulk storage tanks are generally shipped as hazardous materials. A distinction must be made between the two types of samples in order to:

- Determine appropriate procedures for transportation of samples (if there is any doubt, a sample shall be considered hazardous and shipped accordingly.)

- Protect the health and safety of transport and laboratory personnel receiving the samples (special precautions are used by the shipper and at laboratories when hazardous materials are received.)

Detailed procedures for packaging environmental and hazardous material samples are outlined in the remainder of this section.

5.4.1 Environmental Samples

Environmental samples are packaged as follows:

- Place sample container, properly identified and with lid securely fastened in a plastic bag (e.g. Ziploc baggie), and seal the bag.

- Place sample in a cooler constructed of sturdy material which has been lined with a large, plastic (e.g. "garbage" bag).

- Pack with enough noncombustible, absorbent, cushioning materials such as vermiculite (shoulders of bottles must be iced if required) to minimize the possibility of the container breaking.

- If cooling is required (see Attachments A and B), double-bag ice in Ziploc baggies and place around container shoulders, and on top of absorbent packing material (minimum of 8 pounds of ice for a medium-size cooler).

- Seal (i.e., tape or tie top in knot) large liner bag.

- The original (top, signed copy) and extra carbonless copies of the COC form shall be placed inside a large Ziploc-type bag and taped inside the lid of the shipping cooler. If multiple coolers are sent but are included on one COC form, the COC form should be sent with the first cooler. The COC form should then state how many coolers are included with that shipment.

- Close and seal outside of cooler as described in SOP SA-6.3. Signed custody seals must be used.

Coolers must be marked as containing "Environmental Samples." The appropriate side of the container must be marked "This End Up" and arrows placed appropriately. No DOT marking or labeling is required; there are no DOT restrictions on mode of transportation.

5.4.2 Determination of Shipping Classification for Hazardous Material Samples

Samples not determined to be environmental samples, or samples known or expected to contain hazardous materials, must be considered hazardous material samples and transported according to the requirements listed below.

5.4.2.1 Known Substances

If the substance in the sample is known or can be identified, package, mark, label, and ship according to the specific instructions for that material (if it is listed) in the DOT Hazardous Materials Table, 49 CFR 172.101. (DOT Guide for shippers can be found in Attachment D of this document.)

To determine the proper shipping name, use the following steps to help locate the shipping name on the Hazardous Materials Table, DOT 49 CFR 172.101.

1. Look first for the chemical or technical name of the material, for example, ethyl alcohol. Note that many chemicals have more than one technical name, for example, perchloroethylene (not listed in 172.101) is listed as tetrachloroethylene (listed 172.101). It may be useful to consult a chemist for all possible technical names a material can have. If your material is not listed by its technical name, then . . .

2. Look for the chemical family name. For example, pentyl alcohol is not listed but the chemical family name is: alcohol, n.o.s. (not otherwise specified). If the chemical family name is not listed, then . . .

3. Look for a generic name based on end use. For example, Paint, n.o.s or Fireworks, n.o.s. If a generic name based on end use is not listed, then . . .

4. Look for a generic family name based on end use, for example, drugs, n.o.s. or cosmetics, n.o.s. Finally, if your material is not listed by a generic family name but you suspect or know the material is hazardous because it meets the definition of one or more hazardous classes, then . . .

5. You will have to use the general hazard class for a proper shipping name. For example, Flammable Liquid, n.o.s, or Oxidizer, n.o.s.

5.4.2.2 Unknown Substances

For samples of hazardous substances of unknown content, select the appropriate transportation category according to the DOT hazardous materials classification of a material having more than one hazard. This procedure is outlined in DOT Regulation 49 CFR 173.2a. (This can be found in Attachment C of this SOP.)

The correct shipping classification for an unknown sample is selected through a process of elimination, as outlined in DOT Regulation 49 CFR 172.101(c)(11). By using the provisions in this paragraph, the proper shipping name and description will be determined. A step-by-step guide is provided by the Department of Transportation (DOT) and can be found in Attachment D of this SOP.

5.4.3 Packaging and Shipping of Samples Classified as Flammable Liquid (or Solid)

5.4.3.1 Packaging

Applying the word "flammable" to a sample does not imply that it is in fact flammable. The word prescribes the class of packaging according to DOT regulations.

1. Containerize sample as required (see Attachments A and B). To prevent leakage, fill container no more than 90 percent full. Seal lid with teflon tape or wire.

2. Complete sample label and attach securely to sample container.

3. Seal container and place in 2-mil-thick (or thicker) polyethylene bag (e.g., Ziploc baggie), one sample per bag. Position sample identification label so that it can be read through bag. Seal bag.

4. For soil jars, place sealed bag inside metal can (available from laboratory or laboratory supplier) and cushion it with enough noncombustible, absorbent material (for example, vermiculite or diatomaceous earth) between the bottom and sides of the can and bag to prevent breakage and absorb leakage. Pack one bag per can. Use clips, tape, or other positive means to hold can lid securely, tightly and permanently. Mark can as indicated in Paragraph 1 of Section 5.3.4.2, below. Single 1-gallon bottles do not need to be placed in metal cans.

5. Place one or more metal cans (or a single 1-gallon bottle) into a strong outside container, such as a metal picnic cooler or a DOT-approved fiberboard box. Surround cans (or bottle) with noncombustible, absorbent cushioning materials for stability during transport. The absorbent material should be able to absorb the entire contents of the container. Mark container as indicated in Paragraph 2 below.

5.4.3.2 Marking/Labeling

1. Use abbreviations only where specified. Place the following information, either hand-printed or in label form, on the metal can (or 1-gallon bottle):

   - Laboratory name and address.

- Proper shipping name from the hazardous materials table (DOT Regulation CFR 49 172.101). Example: "Flammable Liquid, n.o.s. UN1993" or "Flammable Solid, n.o.s. UN1325." This will include packing group (see Section 5.3.4.2, No. 2.)

Not otherwise specified (n.o.s) is not used if the flammable liquid (or solid) is identified. If identified, the name of the specific material is listed before the category (for example, Acetone, Flammable Liquid), followed by its appropriate UN number found in the DOT Hazardous Materials table (49 CFR 172.101).

2. Determine packing group. The packing group is part of the proper shipping name and must be included on the shipping papers in the description section.

   I. Most Hazardous
   II. Medium Hazard
   III. Least Hazardous

   The packing group will be listed in the hazardous materials table, column 5.

3. Place all information on outside shipping container as on can (or bottle), specifically:

   - Proper shipping name
   - UN or NA number
   - Proper label(s)
   - Addressee and sender

   Place the following labels on the outside shipping container: "Cargo Aircraft Only" and DOT label such as: "Flammable Liquid" (or "Flammable Solid"). "Dangerous When Wet" label shall be used if the Flammable Solid has not been exposed to a wet environment. "Laboratory Samples" and "THIS SIDE UP" or "THIS END UP" shall also be marked on the top of the outside container, and upward-pointing arrows shall be placed on all four sides of the container.

5.4.3.3 <u>Shipping Papers</u>

1. Use abbreviations only where specified. Complete the carrier-provided bill of lading and sign certification statement. Provide the following information in the order listed (one form may be used for more than one exterior container):

   - Proper shipping name. (Example: "Flammable Liquid, n.o.s. UN1993" or "Flammable Solid, n.o.s. UN1325 Packing Group I, II, III").

   - "Limited Quantity" (or "Ltd. Qty."). (See No. 3, below.)

   - "Cargo Aircraft Only."

   - Net weight (wt) or net volume (vol), just before or just after "Flammable Liquid, n.o.s." or "Flammable Solid, n.o.s.," by item, if more than one metal can is inside an exterior container.

   - "Laboratory Samples" (if applicable).

2. Include Chain-of-Custody Record, properly executed in outside container; use custody seals.

3. "Limited Quantity" means the maximum amount of a hazardous material for which there is a specific labeling or packaging exception (DOT CFR 49 171.8). This may mean that packages are exempted from labeling requirements. To determine if your sample meets the Limited Quantity Exception, refer to DOT Regulation CFR 49 Subpart C 173.50 through 173.156. First, determine the proper classification and shipping name for the material; then refer to the exception requirements for that particular class of material beginning with 173.50.

   Example: "Flammable Liquid n.o.s. UN1993 Packing Group 1." The outer package can weigh no more than 66 pounds gross weight. The inner package or container can weigh no more than 0.1 gallon net capacity for each container.

   To determine whether the material can be shipped as a "Limited Quantity," you must check the specific requirement for that class of material.

5.4.3.4 Transportation

1. The majority of unknown hazardous substance samples will be classified as flammable liquids. The samples will be transported by rented or common carrier truck, railroad, or express overnight package services. Do not transport samples on any passenger-carrying air transport system, even if the system has cargo-only aircraft. DOT regulations permit regular airline cargo-only aircraft, but difficulties with most suggest avoiding them. Instead, ship by airline carriers that carry only cargo. If unsure of what mode of transportation to use, consult the FOL or Project Manager.[1]

2. For transport by government-owned vehicle, including aircraft, DOT regulations do not apply. However, procedures described above, with the exception of execution of the bill of lading with certification, shall still be followed.

3. Use the hazardous materials shipping check list (Attachment E) as a guidance to ensure that all sample-handling requirements are satisfied.

4. In some cases, various materials may react if they break during shipment. To determine if you are shipping such materials, refer to the DOT compatibility chart in Attachment F.

5.5 Shipment of Lithium Batteries

Monitoring well data are analyzed using either the Hermit SE 1000 or the Hermit SE 2000 environmental data logger. These instruments are powered by lithium batteries. The Department of Transportation has determined that lithium batteries are a hazardous material and are to be shipped using the following information:

---

[1] Note: If you are unsure as how to ship the sample (hazardous or environmental sample), contact the FOL or Project Manager so that a decision can be made as to the proper shipping practices. The DOT penalties for improper shipment of a hazardous material are stringent and may include a prison term for intentional violations.

- Product Designation
  - Hermit SE 1000
  - Hermit SE 2000

- DOT Proper Shipping Name
  - Lithium batteries, contained in equipment, UN3091

- Classification or Division
  - Class 9

Shipment of equipment containing lithium batteries must be accompanied by shipping papers completed as indicated in Attachment G. The instrument will be shipped by Federal Express as a Hazardous Material. Place the instrument in the same container in which it was received. This container or case is a DOT-approved shipping container. For Federal Express procedures to ship hazardous materials, call 1-800-238-5355, extension 922-1666. In most cases, the return shipping papers and DOT labels will be shipped to you from the company warehouse or the vendor. An example of the types of labels used for shipment and the wording are shown in Attachment G. These labels will be attached to the outside container with the following wording:

- Lithium Batteries Contained in Equipment
  - UN-3091
  - Shipped Under CA-9206009

6.0 REFERENCES

American Public Health Association, 1981. Standard Methods for the Examination of Water and Wastewater, 15th Edition. APHA, Washington, D.C.

U.S. Department of Transportation, 1993. Hazardous Materials Regulations, 49 CFR 171-177.

U.S. EPA, 1984. "Guidelines Establishing Test Procedures for the Analysis of Pollutants under Clean Water Act." Federal Register, Volume 49 (209), October 26, 1984, p. 43234.

U.S. EPA, 1979. Methods for Chemical Analysis of Water and Wastes. EPA-600/4-79-020, U.S. EPA-EMSL, Cincinnati, Ohio.

ATTACHMENT A

GENERAL SAMPLE CONTAINER AND PRESERVATION REQUIREMENTS

Sample Type and Concentration			Container[1]	Sample Size	Preservation[2]	Holding Time[2]
WATER						
Organics (GC&GC/MS)	VOC	Low	Borosilicate glass	2 x 40 mL	Cool to 4°C HCl to ≤ 2	14 days[9]
	Extractables (Low SVOCs and pesticide/PCBs)		Amber glass	2x2 L or 4x1 L	Cool to 4°C	7 days to extraction; 40 days after extraction
	Extractables (Medium SVOCs and pesticide/PCBs)		Amber glass	2x2 L or 4x1 L	None	7 days to extraction; 40 days after extraction
Inorganics	Metals	Low	High-density polyethylene	1 L	HNO_3 to pH ≤2	6 months (Hg-28 days)
		Medium	Wide-mouth glass	16 oz.	None	6 months
	Cyanide	Low	High-density polyethylene	1 L	NaOH to pH>12	14 days
	Cyanide	Medium	Wide-mouth glass	16 oz.	None	14 days
Organic/ Inorganic	High Hazard		Wide-mouth glass	8 oz.	None	14 days
SOIL						
Organics (GC&GC/MS)	VOC		Wide-mouth glass with teflon liner	2 x 4 oz.	Cool to 4°C	14 days
	Extractables (Low SVOCs and pesticides/PCBs)		Wide-mouth glass	8 oz.	Cool to 4°C	14 days to extraction; 40 days after extraction
	Extractables (Medium SVOCs and pesticides/PCBs)		Wide-mouth glass	8 oz.	Cool to 4°C	14 days to extraction; 40 days after extraction
Inorganics	Low/Medium		Wide-mouth glass	8 oz.	Cool to 4°C	6 months (Hg - 28 days) Cyanide (14 days)
Organic/ Inorganic	High Hazard		Wide-mouth glass	8 oz.	None	NA
Dioxin/Furan	All		Wide-mouth glass	4 oz.	None	7 days until extraction; 40 days after extraction
TCLP	All		Wide-mouth glass	8 oz.	None	7 days until preparation; analysis as per fraction
AIR						
Volatile Organics	Low/Medium		Charcoal tube – 7 cm long, 6 mm OD, 4 mm ID	100 L air	Cool to 4°C	5 days recommended

(1) All glass containers should have Teflon cap liners or septa.
(2) See Attachment E. Preservation and maximum holding time allowances per 40 CFR 136.

ATTACHMENT B

ADDITIONAL REQUIRED CONTAINERS, PRESERVATION TECHNIQUES, AND HOLDING TIMES

Parameter Number/Name	Container(1)	Preservation(2)(3)	Maximum Holding Time(4)
INORGANIC TESTS:			
Acidity	P, G	Cool, 4°C	14 days
Alkalinity	P, G	Cool, 4°C	14 days
Ammonia - Nitrogen	P, G	Cool, 4°C; H_2SO_4 to pH 2	28 days
Biochemical Oxygen Demand (BOD)	P, G	Cool, 4°C	48 hours
Bromide	P, G	None required	28 days
Chemical Oxygen Demand (COD)	P, G	Cool, 4°C; H_2SO_4 to pH 2	28 days
Chloride	P, G	None required	28 days
Chlorine, Total Residual	P, G	None required	Analyze immediately
Color	P, G	Cool, 4°C	48 hours
Cyanide, Total and Amenable to Chlorination	P, G	Cool, 4°C; NaOH to pH 12; 0.6 g ascorbic acid(5)	14 days(6)
Fluoride	P	None required	28 days
Hardness	P, G	HNO_3 to pH 2; H_2SO_4 to pH 2	6 months
Total Kjeldahl and Organic Nitrogen	P, G	Cool, 4°C; H_2SO_4 to pH 2	28 days
Nitrate - Nitrogen	P, G	None required	48 hours
Nitrate-Nitrite - Nitrogen	P, G	Cool, 4°C; H_2SO_4 to pH 2	28 days
Nitrite - Nitrogen	P, G	Cool, 4°C	48 hours
Oil & Grease	G	Cool, 4°C; H_2SO_4 to pH 2	28 days
Total Organic Carbon (TOC)	P, G	Cool, 4°C; HCl or H_2SO_4 to pH 2	28 days
Orthophosphate	P, G	Filter immediately; Cool, 4°C	48 hours
Oxygen, Dissolved-Probe	G Bottle & top	None required	Analyze immediately
Oxygen, Dissolved-Winkler	G Bottle & top	Fix on site and store in dark	8 hours
Phenols	G	Cool, 4°C; H_2SO_4 to pH 2	28 days
Phosphorus, Total	P, G	Cool, 4°C; H_2SO_4 to pH 2	28 days
Residue, Total	P, G	Cool, 4°C	7 days
Residue, Filterable (TDS)	P, G	Cool, 4°C	7 days
Residue, Nonfilterable (TSS)	P, G	Cool, 4°C	7 days
Residue, Settleable	P, G	Cool, 4°C	48 hours
Residue, Volatile (Ash Content)	P, G	Cool, 4°C	7 days
Silica	P	Cool, 4°C	28 days
Specific Conductance	P, G	Cool, 4°C	28 days
Sulfate	P, G	Cool, 4°C	28 days

ATTACHMENT B
ADDITIONAL REQUIRED CONTAINERS, PRESERVATION TECHNIQUES, AND HOLDING TIMES
PAGE TWO

Parameter Number/Name	Container(1)	Preservation(2)(3)	Maximum Holding Time(4)
INORGANIC TESTS (Cont'd):			
Sulfide	P, G	Cool, 4°C; add zinc acetate plus sodium hydroxide to pH 9	7 days
Sulfite	P, G	None required	Analyze immediately
Turbidity	P, G	Cool, 4°C	48 hours
METALS:(7)			
Chromium VI (Hexachrome)	P, G	Cool, 4°C	24 hours
Mercury (Hg)	P, G	HNO_3 to pH 2	28 days
Metals, except Chromium VI and Mercury	P, G	HNO_3 to pH 2	6 months
ORGANIC TESTS:(8)			
Purgeable Halocarbons	G, Teflon-lined septum	Cool, 4°C; 0.008% $Na_2S_2O_3$(5)	14 days
Purgeable Aromatic Hydrocarbons	G, Teflon-lined septum	Cool, 4°C; 0.008% $Na_2S_2O_3$(5) HCl to pH 2 (9)	14 days
Acrolein and Acrylonitrile	G, Teflon-lined septum	Cool, 4°C; 0.008% $Na_2S_2O_3$(5) adjust pH to 4-5 (10)	14 days
Phenols(11)	G, Teflon-lined cap	Cool, 4°C; 0.008% $Na_2S_2O_3$(5)	7 days until extraction; 40 days after extraction
Benzidines(11), (12)	G, Teflon-lined cap	Cool, 4°C; 0.008% $Na_2S_2O_3$(5)	7 days until extraction(13)
Phthalate esters(11)	G, Teflon-lined cap	Cool, 4°C	7 days until extraction; 40 days after extraction
Nitrosamines(11), (14)	G, Teflon-lined cap	Cool, 4°C; store in dark; 0.008% $Na_2S_2O_3$(5)	7 days until extraction; 40 days after extraction
PCBs(11)	G, Teflon-lined cap	Cool, 4°C	7 days until extraction; 40 days after extraction
Nitroaromatics & Isophorone(11)	G, Teflon-lined cap	Cool, 4°C; 0.008% $Na_2S_2O_3$(5); store in dark	7 days until extraction; 40 days after extraction
Polynuclear Aromatic Hydrocarbons (PAHs)(11),(14)	G, Teflon-lined cap	Cool, 4°C; 0.008% $Na_2S_2O_3$(5); store in dark	7 days until extraction; 40 days after extraction
Haloethers(11)	G, Teflon-lined cap	Cool, 4°C; 0.008% $Na_2S_2O_3$(5)	7 days until extraction; 40 days after extraction
Dioxin/Furan (TCDD/TCDF)(11)	G, Teflon-lined cap	Cool, 4°C; 0.008% $Na_2S_2O_3$(5)	7 days until extraction; 40 days after extraction

ATTACHMENT B
ADDITIONAL REQUIRED CONTAINERS, PRESERVATION TECHNIQUES, AND HOLDING TIMES
PAGE THREE

Parameter Number/Name	Container(1)	Preservation(2)(3)	Maximum Holding Time(4)
RADIOLOGICAL TESTS:			
1-5 Alpha, beta and radium	P, G	HNO_3 to pH 2	6 months

(1) Polyethylene (P): generally 500 ml or Glass (G): generally 1L.
(2) Sample preservation should be performed immediately upon sample collection. For composite chemical samples each aliquot should be preserved at the time of collection. When use of an automated sampler makes it impossible to preserve each aliquot, then chemical samples may be preserved by maintaining at 4°C until compositing and sample splitting is completed.
(3) When any sample is to be shipped by common carrier or sent through the United States Mail, it must comply with the Department of Transportation Hazardous Materials Regulations (49 CFR Part 172).
(4) Samples should be analyzed as soon as possible after collection. The times listed are the maximum times that samples may be held before analysis and still be considered valid. Samples may be held for longer periods only if the permittee, or monitoring laboratory, has data on file to show that the specific types of samples under study are stable for the longer periods, and has received a variance from the Regional Administrator.
(5) Should only be used in the presence of residual chlorine.
(6) Maximum holding time is 24 hours when sulfide is present. Optionally, all samples may be tested with lead acetate paper before pH adjustments are made to determine if sulfide is present. If sulfide is present, it can be removed by the addition of cadmium nitrate powder until a negative spot test is obtained. The sample is filtered and then NaOH is added to pH 12.
(7) Samples should be filtered immediately on site before adding preservative for dissolved metals.
(8) Guidance applies to samples to be analyzed by GC, LC, or GC/MS for specific compounds.
(9) Sample receiving no pH adjustment must be analyzed within 7 days of sampling.
(10) The pH adjustment is not required if acrolein will not be measured. Samples for acrolein receiving no pH adjustment must be analyzed within 3 days of sampling.
(11) When the extractable analytes of concern fall within a single chemical category, the specified preservative and maximum holding times should be observed for optimum safeguard of sample integrity. When the analytes of concern fall within two or more chemical categories, the sample may be preserved by cooling to 4°C, reducing residual chlorine with 0.008% sodium thiosulfate, storing in the dark, and adjusting the pH to 6-9; samples preserved in this manner may be held for 7 days before extraction and for 40 days after extraction. Exceptions to this optional preservation and holding time procedure are noted in footnote 5 (re: the requirement for thiosulfate reduction of residual chlorine) and footnotes 12, 13 (re: the analysis of benzidine).
(12) If 1,2-diphenylthydrazine is likely to be present, adjust the pH of the sample to 4.0±0.2 to prevent rearrangement to benzidine.
(13) Extracts may be stored up to 7 days before analysis if storage is conducted under an inert (oxidant-free) atmosphere.
(14) For the analysis of diphenylnitrosamine, add 0.008% $Na_2S_2O_3$ and adjust pH to 7-10 with NaOH within 24 hours of sampling.
(15) The pH adjustment may be performed upon receipt at the laboratory and may be omitted if the samples are extracted within 72 hours of collection. For the analysis of aldrin, add 0.008% $Na_2S_2O_3$.

ATTACHMENT C

DOT HAZARDOUS MATERIAL CLASSIFICATION (49 CFR 173.2a)

1. Radioactive material (except a limited quantity)
2. Division 2.3, Poisonous Gases
3. Division 2.1, Flammable Gas
4. Division 2.2, Nonflammable gas
5. Division 6.1, Poisonous Liquids, Packing Group 1 (poison by inhalation only)
6. Division 4.2, Pyrophoric Material
7. Division 4.1, Self-Reactive Material
8. Class 3, Flammable Liquids*
9. Class 8, Corrosive Material
10. Division 4.1, Flammable Solid*
11. Division 4.2, Spontaneously Combustible Materials*
12. Division 4.3, Dangerous When Wet Materials*
13. Division 5.1, Oxidizers*
14. Division 6.1, Poisonous Liquids or Solids (other than Packing Group 1)*
15. Combustible liquid
16. Class 9, Miscellaneous Hazardous Materials

* If a material has or meets the criteria for more than one hazard class, use the precedence of hazardous table on the following page for Classes 3 and 8 and Divisions 4.1, 4.2, 4.3, 5.1, and 6.1. The following table ranks those materials that meet the definition of Classes 3 and 8 and Divisions 4.1, 4.2, 4.3, 5.1, and 6.1.

ATTACHMENT C (Continued)

PRECEDENCE OF HAZARD TABLE

(Hazard Class and Packing Group)

Class	Packing Group	4.2	4.3	5.1 I[a]	5.1 II[a]	5.1 III[a]	6.1 I (Dermal)	6.1 I (Oral)	6.1 II	6.1 III	8 I (Liquid)	8 I (Solid)	8 II (Liquid)	8 II (Solid)	8 III (Liquid)	8 III (Solid)
3	I						3	3	3	3	3	[c]	3	[c]	3	[c]
3	II						3	3	3	3	8	[c]	3	[c]	3	[c]
3	III						6.1	6.1	6.1	3[d]	8	[c]	8	[c]	3	[c]
4.1	II[b]	4.2	4.3	5.1	4.1	4.1	6.1	6.1	4.1	4.1	[c]	8	[c]	4.1	[c]	4.1
4.1	III[b]	4.2	4.3	5.1	4.1	4.1	6.1	6.1	6.1	4.1	[c]	8	[c]	8	[c]	4.1
4.2	II		4.3	5.1	4.2	4.2	6.1	6.1	4.2	4.2	[c]	8	[c]	4.2	[c]	4.2
4.2	III		4.3	5.1	4.2	4.2	6.1	6.1	6.1	4.2	[c]	8	[c]	8	[c]	4.2
4.3	I			5.1	4.3	4.3	6.1	4.3	4.3	4.3	4.3	4.3	4.3	4.3	4.3	4.3
4.3	II			5.1	4.3	4.3	6.1	4.3	4.3	4.3	8	8	8	4.3	4.3	4.3
4.3	III			5.1	4.3	4.3	6.1	6.1	6.1	4.3	8	8	8	8	4.3	4.3
5.1	I[a]						5.1	5.1	5.1	5.1	5.1	5.1	5.1	5.1	5.1	5.1
5.1	II[a]						6.1	5.1	5.1	5.1	8	8	8	5.1	5.1	5.1
5.1	III[a]						6.1	6.1	6.1	5.1	8	8	8	8	5.1	5.1
6.1	I, Dermal										8	6.1	6.1	6.1	6.1	6.1
6.1	I, Oral										8	6.1	6.1	6.1	6.1	6.1
6.1	II, Inhalation										8	6.1	6.1	6.1	6.1	6.1
6.1	II, Dermal										8	6.1	8	6.1	6.1	6.1
6.1	II, Oral										8	8	8	6.1	6.1	6.1
6.1	III										8	8	8	8	8	8

(a) There are at present no established criteria for determining Packing Groups for liquids in Division 5.1. At present, the degree of hazard is to be assessed by analogy with listed substances, allocating the substances to Packing Group I, Great; Group II, Medium; or Group III, Minor Danger.
(b) Substances of Division 4.1 other than self-reactive substances.
(c) Denotes an impossible combination.
(d) For pesticides only, where a material has the hazards of Class 3, Packing Group III, and Division 6.1, Packing Group III, the primary hazard is Division 6.1, Packing Group III.

ATTACHMENT D

GUIDE FOR HAZARDOUS MATERIALS SHIPPERS

USE OF GUIDE - This guide is presented as an aid to shippers of hazardous materials. It does not contain or refer to all of the DOT requirements for shipping hazardous materials. For specific details, refer to all of the DOT requirements for shipping hazardous materials, as provided in the Code of Federal Regulations (CFR), Title 49, Transportation, Parts 100-199.

The following is offered as a step-by-step procedure to aid in compliance with the applicable DOT regulations.

STEP 1 - DETERMINE THE PROPER SHIPPING NAME. The shipper must determine the proper shipping name of the materials as listed in the Hazardous Materials Table, 49 CFR 172.101, Column (2).

STEP 2 - DETERMINE THE HAZARD CLASS OR CLASSES.

a. Refer to the Table, 49 CFR 172.101, Column (3), and locate the hazard class of the material.
b. If more than one class is shown for the proper shipping name, determine the proper class by definition.
c. If the materials have more than one hazard, classify the material based on the order of hazards in 49 CFR 173.2.

STEP 3 - SELECT THE PROPER IDENTIFICATION NUMBERS.

a. Refer to the Table, 49 CFR 172.101, Column (3a), and select the Identification Number (ID) that corresponds to the proper shipping name and hazard class.
b. Enter the ID number(s) on the shipping papers and display them, as required, on packagings, placards and/or orange panels.

STEP 4 - DETERMINE THE MODE(S) OF TRANSPORT TO ULTIMATE DESTINATION.

a. As a shipper, you must assure yourself that the shipment complies with various modal requirements.
b. The modal requirements may affect the following: (1) Packaging; (2) Quantity per Package; (3) Marking; (4) Labeling; (5) Shipping Papers; and (6) Certification.

STEP 5 - SELECT THE PROPER LABEL(S) AND APPLY AS REQUIRED.

a. Refer to the Table, 49 CFR 172.101, Column (4) for required labels.
b. For details on labeling refer to (1) Additional Labels, 49 CFR 172.402; (2) Placement of Labels, 49 CFR 172.406; (3) Packagings (Mixed or Consolidated), 49 CFR 172.404(a) and (h); (4) Packages Containing Samples, 49 CFR 172.402(h); (5) Radioactive Materials, 49 CFR 172.403; and (6) Authorized Label Modifications, 49 CFR 172.405.

STEP 6 - DETERMINE AND SELECT THE PROPER PACKAGES.

a. Refer to the Table, 49 CFR 172.101, Column (5a) for exceptions and Column (5b) for specification packagings. Consider the following when selecting an authorized package: Quantity per Package; Cushioning Material, if required; Proper Closure and Reinforcement; Proper Pressure; Outage; etc., as required.
b. If packaged by a prior shipper, make sure the packaging is correct and in proper condition for transportation.

ATTACHMENT D (Continued)
GUIDE FOR HAZARDOUS MATERIALS SHIPPERS

STEP 7 - MARK THE PACKAGING (INCLUDING OVERPACKS).

a. Apply the required markings (49 CFR 172.300); Proper shipping name and ID number, when required (49 CFR 172.301); Name and address of Consignee or Consignor (49 CFR 172.306).
b. For details and other required markings, see 49 CFR 172.300 through 172.338.

STEP 8 - PREPARE THE SHIPPING PAPERS.

a. The basic requirements for preparing shipping papers include Proper Shipping Name; Hazard Class; ID Number; Total Quantity; Shipper's Certification; and Emergency Response Telephone Number.
b. Make all entries on the shipping papers using the information required and in proper sequence (49 CFR 172.202).

STEP 9 - CERTIFICATION.

a. Each shipper must certify by printing (manually or mechanically) on the shipping papers that the materials being offered for shipment are properly classified, described, packaged, marked and labeled, and in proper condition for transportation according to the applicable DOT Regulations (49 CFR 172.202).

STEP 10 - LOADING, BLOCKING, AND BRACING. When hazardous materials are loaded into the transport vehicle or freight container, each package must be loaded, blocked, and braced in accordance with the requirements for mode of transport.

a. If the shipper loads the freight container or transport vehicle, the shipper is responsible for the proper loading, blocking, and bracing of the materials.
b. If the carrier does the loading, the carrier is responsible.

STEP 11 - DETERMINE THE PROPER PLACARD(S). Each person who offers hazardous materials for transportation must determine that the placarding requirements have been met.

a. For Highway, unless the vehicle is already correctly placarded, the shipper must provide the required placard(s) and required ID number(s) (49 CFR 172.506).
b. For Rail, if loaded by the shipper, the shipper must placard the rail car if placards are required (49 CFR 172.508).
c. For Air and Water shipments, the shipper has the responsibility to apply the proper placards.

STEP 12 - HAZARDOUS WASTE/HAZARDOUS SUBSTANCE.

a. If the material is classed as a hazardous waste or hazardous substance, most of the above steps will be applicable.
b. Pertinent Environmental Protection Agency regulations are found in the Code of Federal Regulations, Title 40, Part 262.

As a final check and before offering the shipment for transportation, visually inspect your shipment. The shipper should ensure that emergency response information is on the vehicle for transportation of hazardous materials.

NOTE: This material may be reproduced without special permission from this office.

Revised March 1995.

ATTACHMENT E

HAZARDOUS MATERIALS SHIPPING CHECK LIST

PACKAGING

1. Check DOT 173.24 for appropriate type of package for hazardous substance.
2. Check for container integrity, especially the closure.
3. Check for sufficient absorbent material in package.
4. Check for sample tags and log sheets for each sample and for chain-of-custody record.

SHIPPING PAPERS

1. Check that entries contain only approved DOT abbreviations.
2. Check that entries are in English.
3. Check that hazardous material entries are specially marked to differentiate them from any nonhazardous materials being sent using same shipping paper.
4. Be careful that all hazardous classes are shown for multiclass materials.
5. Check total amounts by weight, quantity, or other measures used.
6. Check that any limited-quantity exemptions are so designated on the shipping paper.
7. Check that certification is signed by shipper.
8. Make certain driver signs for shipment.

RCRA MANIFEST

1. Check that approved state/federal manifests are prepared.
2. Check that transporter has the following: valid EPA identification number, valid driver's license, valid vehicle registration, insurance protection, and proper DOT labels for materials being shipped.
3. Check that destination address is correct.
4. Check that driver knows where shipment is going.
5. Check that the driver is aware of emergency procedures for spills and accidents.
6. Make certain driver signs for shipment.
7. Make certain one copy of executed manifest and shipping document is retained by shipper.

ATTACHMENT F

DOT SEGREGATION AND SEPARATION CHART

Class or Division	Notes	1.1-1.2	1.3	1.4	1.5	1.6	2.1	2.2	2.3 gas Zone A*	2.3 gas Zone B*	3	4.1	4.2	4.3	5.1	5.2	6.1 liquids PG-I Zone A*	7	8 liquids only
Explosives ..... 1.1 and 1.2	A	*	*	*	*	*	X	X	X	X	X	X	X	X	X	X	X	X	X
Explosives 1.3		*	*	*	*	*	X		X	X	X		X	X	X	X	X		X
Explosives 1.4		*	*	*	*	*	O		O	O	O		O				O		O
Very insensitive explosives 1.5	A	*	*	*	*	*	X	X	X	X	X	X	X	X	X	X	X	X	X
Extremely insensitive explosives 1.6		*	*	*	*	*													
Flammable gases 2.1		X	X	O	X				X	O							O	O	
Non-toxic, non-flammable gases 2.2		X			X														
Poisonous gas - Zone A** 2.3		X	X	O	X		X				X	X	X	X	X	X			X
Poisonous gas - Zone B** 2.3		X	X	O	X		O				O	O	O	O	O	O			O
Flammable liquids 3		X	X	O	X				X	O					O		X		
Flammable solids 4.1		X			X				X	O							X		O
Spontaneously combustible materials 4.2		X	X	O	X				X	O							X		X
Dangerous-when-wet materials 4.3		X	X		X				X	O							X		O
Oxidizers 5.1	A	X	X		X				X	O	O						X		O
Organic peroxides 5.2		X	X		X				X	O							X		O
Poisonous liquids PG I - Zone A** .. 6.1		X	X	O	X		O				X	X	X	X	X	X			X
Radioactive materials 7		X			X		O												
Corrosive liquids 8		X	X	O	X				X	O		O	X	O	O	O	X		

No entry means that the materials are compatible (have no restrictions).

X These materials may not be loaded, transported, or stored together in the same vehicle or facility.
O The materials may not be loaded, transported, or stored together in the same vehicle or facility unless they are separated for 4 feet on all sides.
* Check the explosives compatibility chart in 49 CFR 179.848(f).
A Ammonium nitrate fertilizers may be stored with Division 1.1 materials.
** Denotes inhalation hazardous for poisons; consult field team leader or project manager if you encounter a material in this class before shipment.

ATTACHMENT G
LITHIUM BATTERY SHIPPING PAPERS

3224637861

Two completed and signed copies of this Declaration must be handed to the operator.

WARNING

Failure to comply in all respects with the applicable Dangerous Goods Regulations may be in breach of the applicable law, subject to legal penalties. This Declaration must not, in any circumstances, be completed and/or signed by a consolidator, a forwarder or an IATA cargo agent.

TRANSPORT DETAILS

This shipment is within the limitations prescribed for: *(delete non applicable)*

~~PASSENGER AIRCRAFT~~ | CARGO AIRCRAFT ONLY

Airport of Departure:

Airport of Destination: 19CYS

Shipment type: *(delete non-applicable)*

NON-RADIOACTIVE | ~~RADIOACTIVE~~

NATURE AND QUANTITY OF DANGEROUS GOODS

Dangerous Goods Identification						
Proper Shipping Name	Class or Division	UN or ID No.	Subsidiary Risk	Quantity and type of packing	Packing Inst.	Authorization
LITHIUM BATTERIES CONTAINED IN EQUIPMENT	9	UN3091		1 PLASTIC BOX X 55 GRAMS	912 II	PER CA-9206009

Additional Handling Information

1 HERMIT SERIES DATALOGGER X 55 GRAMS (11 GRAMS/CELL)

I hereby declare that the contents of this consignment are fully and accurately described above by proper shipping name and are classified, packed, marked, and labeled, and are in all respects in the proper condition for transport by air according to the applicable International and National Government Regulations.

Name/Title of Signatory

Place and Date

Signature *(see warning above)*

Emergency Telephone Number (Required for US Origin or Destination Shipments)
800-535-5053

IF ACCEPTABLE FOR PASSENGER AIRCRAFT, THIS SHIPMENT CONTAINS RADIOACTIVE MATERIAL INTENDED FOR USE IN, OR INCIDENT TO, RESEARCH, MEDICAL DIAGNOSIS, OR TREATMENT.

ATTACHMENT G (CONTINUED)
LITHIUM BATTERY SHIPPING PAPERS

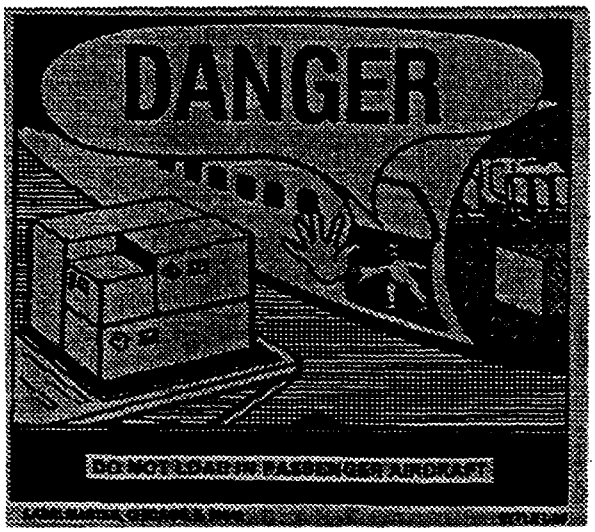

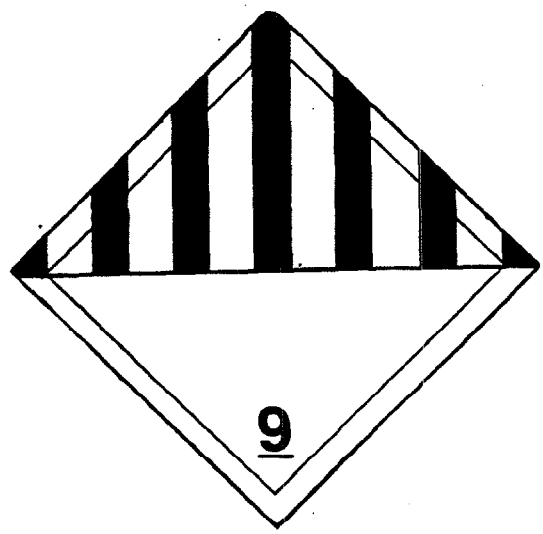

LITHIUM BATTERIES CONTAINED IN EQUIPMENT.
UN-3091.
SHIPPED UNDER CA-9206009

TABLE OF CONTENTS

SECTION		PAGE
1.0	PURPOSE	3
2.0	SCOPE	3
3.0	GLOSSARY	3
4.0	RESPONSIBILITIES	3
5.0	PROCEDURES	3
5.1	Site Logbook	3
5.1.1	General	3
5.1.2	Photographs	4
5.2	Site Notebooks	4
5.3	Sample Forms	5
5.3.1	Sample Collection, Labeling, Shipment and Request for Analysis	5
5.3.2	Geohydrological and Geotechnical Forms	6
5.3.3	Equipment Calibration and Maintenance Form	6
5.4	Field Reports	7
5.4.1	Weekly Status Reports	7
5.4.2	Daily Activities Report	7
6.0	ATTACHMENTS	8

TABLE OF CONTENTS (Continued)

ATTACHMENTS (EXAMPLES) **PAGE**

A	TYPICAL SITE LOGBOOK ENTRY	9
B-1	EXAMPLE GROUNDWATER SAMPLE LOG SHEET	10
B-2	EXAMPLE SURFACE WATER SAMPLE LOG SHEET	11
B-3	EXAMPLE SOIL/SEDIMENT SAMPLE LOG SHEET	12
B-4	CONTAINER SAMPLE LOG SHEET FORM	13
B-5	SAMPLE LABEL	14
B-6	CHAIN-OF-CUSTODY RECORD FORM	15
B-7	CHAIN-OF-CUSTODY SEAL	16
C-1	EXAMPLE GROUNDWATER LEVEL MEASUREMENT SHEET	17
C-2	EXAMPLE PUMPING TEST DATA SHEET	18
C-3	PACKER TEST REPORT FORM	19
C-4	EXAMPLE BORING LOG	20
C-5	EXAMPLE OVERBURDEN MONITORING WELL SHEET	22
C-5A	EXAMPLE OVERBURDEN MONITORING WELL SHEET (FLUSHMOUNT)	23
C-6	EXAMPLE CONFINING LAYER MONITORING WELL SHEET	24
C-7	EXAMPLE BEDROCK MONITORING WELL SHEET - OPEN HOLE WELL	25
C-8	EXAMPLE BEDROCK MONITORING WELL SHEET, WELL INSTALLED IN BEDROCK	26
C-8A	EXAMPLE BEDROCK MONITORING WELL SHEET, WELL INSTALLED IN BEDROCK (FLUSHMOUNT)	27
C-9	EXAMPLE TEST PIT LOG	28
D	EXAMPLE EQUIPMENT CALIBRATION LOG	29
E	EXAMPLE DAILY ACTIVITIES RECORD	30
F	FIELD TRIP SUMMARY REPORT	31

1.0 PURPOSE

The purpose of this Standard Operating Procedure (SOP) is to identify and designate the field data record forms, logs and reports generally initiated and maintained for documenting Brown & Root Environmental field activities.

2.0 SCOPE

Documents presented within this procedure (or equivalents) shall be used for all Brown & Root Environmental field activities, as applicable. Other or additional documents may be required by specific client contracts.

3.0 GLOSSARY

None

4.0 RESPONSIBILITIES

Project Manager - The Project Manager is responsible for obtaining hardbound, controlled-distribution logbooks (from the appropriate source), as needed. In addition, the Project Manager is responsible for placing all forms used in site activities (i.e., records, field reports, and upon the completion of field work, the site logbook) in the project's central file.

Field Operations Leader (FOL) - The Field Operations Leader is responsible for ensuring that the site logbook, notebooks, and all appropriate forms and field reports illustrated in this guideline (and any additional forms required by the contract) are correctly used, accurately filled out, and completed in the required time-frame.

5.0 PROCEDURES

5.1 Site Logbook

5.1.1 General

The site logbook is a hard-bound, paginated controlled-distribution record book in which all major onsite activities are documented. At a minimum, the following activities/events shall be recorded (daily) in the site logbook:

- All field personnel present
- Arrival/departure of site visitors
- Arrival/departure of equipment
- Start or completion of borehole/trench/monitoring well installation or sampling activities
- Daily onsite activities performed each day
- Sample pickup information
- Health and Safety issues (level of protection observed, etc.)
- Weather conditions

A site logbook shall be maintained for each project. The site logbook shall be initiated at the start of the first onsite activity (e.g., site visit or initial reconnaissance survey). Entries are to be made for every day that onsite activities take place which involve Brown & Root Environmental or subcontractor personnel. Upon completion of the fieldwork, the site logbook must become part of the project's central file.

The following information must be recorded on the cover of each site logbook:

- Project name
- Brown & Root Environmental project number
- Sequential book number
- Start date
- End date

Information recorded daily in the site logbook need not be duplicated in other field notebooks (see Section 5.2), but must summarize the contents of these other notebooks and refer to specific page locations in these notebooks for detailed information (where applicable). An example of a typical site logbook entry is shown in Attachment A.

If measurements are made at any location, the measurements and equipment used must either be recorded in the site logbook or reference must be made to the site notebook in which the measurements are recorded (see Attachment A).

All logbook, notebook, and log sheet entries shall be made in indelible ink (black pen is preferred). No erasures are permitted. If an incorrect entry is made, the data shall be crossed out with a single strike mark, and initialed and dated. At the completion of entries by any individual, the logbook pages used must be signed and dated. The site logbook must also be signed by the Field Operations Leader at the end of each day.

5.1.2 Photographs

When movies, slides, or photographs are taken of a site or any monitoring location, they must be numbered sequentially to correspond to logbook entries. The name of the photographer, date, time, site location, site description, and weather conditions must be entered in the logbook as the photographs are taken. A series entry may be used for rapid-sequence photographs. The photographer is not required to record the aperture settings and shutter speeds for photographs taken within the normal automatic exposure range. However, special lenses, films, filters, and other image-enhancement techniques must be noted in the logbook. If possible, such techniques shall be avoided, since they can adversely affect the admissibility of photographs as evidence. Chain-of-custody procedures depend upon the subject matter, type of film, and the processing it requires. Film used for aerial photography, confidential information, or criminal investigation require chain-of-custody procedures. Adequate logbook notation and receipts must be compiled to account for routine film processing. Once processed, the slides of photographic prints shall be consecutively numbered and labeled according to the logbook descriptions. The site photographs and associated negatives must be docketed into the project's central file.

5.2 Site Notebooks

Key field team personnel may maintain a separate dedicated notebook to document the pertinent field activities conducted directly under their supervision. For example, on large projects with multiple investigative sites and varying operating conditions, the Health and Safety Officer may elect to maintain a separate site notebook. Where several drill rigs are in operation simultaneously, each site geologist assigned to oversee a rig must maintain a site notebook.

5.3 Sample Forms

A summary of the forms illustrated in this procedure is shown as the listing of Attachments in the Table of Contents for this SOP. Forms may be altered or revised for project-specific needs contingent upon client approval. Care must be taken to ensure that all essential information can be documented. Guidelines for completing these forms can be found in the related sampling SOP.

5.3.1 Sample Collection, Labeling, Shipment and Request for Analysis

5.3.1.1 Sample Log Sheet

Sample Log Sheets are used to record specified types of data while sampling. Attachments B-1 to B-4 are examples of Sample Log Sheets. The data recorded on these sheets are useful in describing the waste source and sample as well as pointing out any problems encountered during sampling. A log sheet must be completed for each sample obtained, including field quality control (QC) samples.

5.3.1.2 Sample Label

A typical sample label is illustrated in Attachment B-5. Adhesive labels must be completed and applied to every sample container. Sample labels can usually be obtained from the appropriate Program source or are supplied from the laboratory subcontractor.

5.3.1.3 Chain-of-Custody Record Form

The Chain-of-Custody (COC) Record is a multi-part form that is initiated as samples are acquired and accompanies a sample (or group of samples) as they are transferred from person to person. This form must be used for any samples collected for chemical or geotechnical analysis whether the analyses are performed on site or off site. One part of the completed COC form is retained by the field crew while the other two or three portions are sent to the laboratory. The original (top, signed copy) and extra carbonless copies of the COC form shall be placed inside a large Ziploc-type bag and taped inside the lid of the shipping cooler. If multiple coolers are sent but are included on one COC form, the COC form should be sent with the first cooler. The COC form should then state how many coolers are included with that shipment. An example of a Chain-of-Custody Record form is provided as Attachment B-6. A supply of these forms are purchased and stocked by the field department of the various Brown & Root Environmental offices. Alternately, COC forms supplied by the laboratory may be used. Once the samples are received at the laboratory, the sample cooler and contents are checked and any problems are noted on the enclosed COC form (any discrepancies between the sample labels and COC form and any other problems that are noted are resolved through communication between the laboratory point-of-contact and the Brown & Root Environmental Project Manager). The COC form is signed and one of the remaining two parts are retained by the laboratory while the last part becomes part of the samples' corresponding analytical data package. Internal laboratory chain-of-custody procedures are documented in the Laboratory Quality Assurance Plan (LQAP).

5.3.1.4 Chain-of-Custody Seal

Attachment B-7 is an example of a custody seal. The Custody seal is also an adhesive-backed label. It is part of a chain-of-custody process and is used to prevent tampering with samples after they have been collected in the field and sealed in coolers for transit to the laboratory. The COC seals are signed and dated by the samplers and affixed across the opening edges of each cooler containing environmental samples. COC seals may be available from the laboratory; these seals may also be purchased from a supplier.

5.3.2 Geohydrological and Geotechnical Forms

5.3.2.1 Groundwater Level Measurement Sheet

A groundwater level measurement sheet, shown in Attachment C-1 must be filled out for each round of water level measurements made at a site.

5.3.2.2 Data Sheet for Pumping Test

During the performance of a pumping test (or an in-situ hydraulic conductivity test), a large amount of data must be recorded, often within a short time period. The pumping test data sheet (Attachment C-2) facilitates this task by standardizing the data collection format, and allowing the time interval for collection to be laid out in advance.

5.3.2.3 Packer Test Report Form

A packer test report form shown in Attachment C-3 must be completed for each well upon which a packer test is conducted following well installation.

5.3.2.4 Summary Log of Boring

During the progress of each boring, a log of the materials encountered, operation and driving of casing, and location of samples must be kept. The Summary Log of Boring (Attachment C-4) is used for this purpose and must be completed for each soil boring performed. In addition, if volatile organics are monitored on cores, samples or cuttings from the borehole (using HNU or OVA detectors), these results must be entered on the boring log (under the "Remarks" column) at the appropriate depth. The "Remarks" column can also be used to subsequently enter the laboratory sample number and the concentration of a few key analytical results. This feature allows direct comparison of contaminant concentrations with soil characteristics.

5.3.2.5 Monitoring Well Construction Details Form

A Monitoring Well Construction Details Form must be completed for every monitoring well piezometer or temporary well point installed. This form contains specific information on length and type of well riser pipe and screen, backfill, filter pack, annular seal and grout characteristics, and surface seal characteristics. This information is important in evaluating the performance of the monitoring well, particularly in areas where water levels show temporal variation, or where there are multiple (immiscible) phases of contaminants. Depending on the type of monitoring well (in overburden or bedrock), different forms are used (see Attachments C-5 through C-9). Similar forms are used for flush-mount well completions. The Monitoring Well Construction Details Form is not a controlled document.

5.3.2.6 Test Pit Log

When a test pit or trench is constructed for investigative or sampling purposes, a Test Pit Log (Attachment C-10) must be filled out by the responsible field geologist or sampling technician.

5.3.3 Equipment Calibration and Maintenance Form

The calibration or standardization of monitoring, measuring or test equipment is necessary to assure the proper operation and response of the equipment, to document the accuracy, precision or sensitivity of the measurement, and determine if correction should be applied to the readings. Some items of

equipment require frequent calibration, others infrequent. Some are calibrated by the manufacturer, others by the user.

Each instrument requiring calibration has its own Equipment Calibration Log (Attachment D) which documents that the manufacturer's instructions were followed for calibration of the equipment, including frequency and type of standard or calibration device. An Equipment Calibration Log must be maintained for each electronic measuring device used in the field; entries must be made for each day the equipment is used.

5.4 Field Reports

The primary means of recording onsite activities is the site logbook. Other field notebooks may also be maintained. These logbooks and notebooks (and supporting forms) contain detailed information required for data interpretation or documentation, but are not easily useful for tracking and reporting of progress. Furthermore, the field logbook/notebooks remain onsite for extended periods of time and are thus not accessible for timely review by project management.

5.4.1 Weekly Status Reports

To facilitate timely review by project management, Xeroxed copies of logbook/notebook entries may be made for internal use. To provide timely oversight of onsite contractors, Daily Activities Reports are completed and submitted as described below.

It should be noted that in addition to the summaries described herein, other summary reports may also be contractually required.

5.4.2 Daily Activities Report

5.4.2.1 Description

The Daily Activities Report (DAR) documents the activities and progress for each day's field work. This report must be filled out on a daily basis whenever there are drilling, test pitting, well construction, or other related activities occurring which involve subcontractor personnel. These sheets summarize the work performed and form the basis of payment to subcontractors (Attachment E is an example of a Daily Activities Report).

5.4.2.2 Responsibilities

It is the responsibility of the rig geologist to complete the DAR and obtain the driller's signature acknowledging that the times and quantities of material entered are correct.

5.4.2.3 Submittal and Approval

At the end of the shift, the rig geologist must submit the Daily Activities Report to the Field Operations Leader (FOL) for review and filing. The Daily Activities Report is not a formal report and thus requires no further approval. The DAR reports are retained by the FOL for use in preparing the site logbook and in preparing weekly status reports for submission to the Project Manager.

6.0 ATTACHMENTS

Attachment A	TYPICAL SITE LOGBOOK ENTRY
Attachment B-1	EXAMPLE GROUNDWATER SAMPLE LOG SHEET
Attachment B-2	EXAMPLE SURFACE WATER SAMPLE LOG SHEET
Attachment B-3	EXAMPLE SOIL/SEDIMENT SAMPLE LOG SHEET
Attachment B-4	CONTAINER SAMPLE LOG SHEET FORM
Attachment B-5	SAMPLE LABEL
Attachment B-6	CHAIN-OF-CUSTODY RECORD FORM
Attachment B-7	CHAIN-OF-CUSTODY SEAL
Attachment C-1	EXAMPLE GROUNDWATER LEVEL MEASUREMENT SHEET
Attachment C-2	EXAMPLE PUMPING TEST DATA SHEET
Attachment C-3	PACKER TEST REPORT FORM
Attachment C-4	EXAMPLE BORING LOG
Attachment C-5	EXAMPLE OVERBURDEN MONITORING WELL SHEET
Attachment C-5A	EXAMPLE OVERBURDEN MONITORING WELL SHEET (FLUSHMOUNT)
Attachment C-6	EXAMPLE CONFINING LAYER MONITORING WELL SHEET
Attachment C-7	EXAMPLE BEDROCK MONITORING WELL SHEET - OPEN HOLE WELL
Attachment C-8	EXAMPLE BEDROCK MONITORING WELL SHEET - WELL INSTALLED IN BEDROCK
Attachment C-8A	EXAMPLE BEDROCK MONITORING WELL SHEET - WELL INSTALLED IN BEDROCK (FLUSHMOUNT)
Attachment C-9	EXAMPLE TEST PIT LOG
Attachment D	EXAMPLE EQUIPMENT CALIBRATION LOG
Attachment E	EXAMPLE DAILY ACTIVITIES RECORD
Attachment F	FIELD TRIP SUMMARY REPORT

ATTACHMENT A
TYPICAL SITE LOGBOOK ENTRY

START TIME: _____ DATE: _____

SITE LEADER: _____

PERSONNEL:

BROWN & ROOT ENV.	DRILLER	EPA
_____	_____	_____
_____	_____	_____
_____	_____	_____

WEATHER: Clear, 68°F, 2-5 mph wind from SE

ACTIVITIES:

1. Steam jenney and fire hoses were set up.
2. Drilling activities at well ____ resumes. Rig geologist was _____. See Geologist's Notebook, No. 1, page 29-30, for details of drilling activity. Sample No. 123-21-S4 collected; see sample logbook, page 42. Drilling activities completed at 11:50 and a 4-inch stainless steel well installed. See Geologist's Notebook, No. 1, page 31, and well construction details for well _____.
3. Drilling rig No. 2 steam-cleaned at decontamination pit. Then set up at location of well _____.
4. Well _____ drilled. Rig geologist was _____. See Geologist's Notebook, No. 2, page ____ for details of drilling activities. Sample numbers 123-22-S1, 123-22-S2, and 123-22-S3 collected; see sample logbook, pages 43, 44, and 45.
5. Well _____ was developed. Seven 55-gallon drums were filled in the flushing stage. The well was then pumped using the pitcher pump for 1 hour. At the end of the hour, water pumped from well was "sand free."
6. EPA remedial project manger arrives on site at 14:25 hours.
7. Large dump truck arrives at 14:45 and is steam-cleaned. Backhoe and dump truck set up over test pit _____.
8. Test pit _____ dug with cuttings placed in dump truck. Rig geologist was _____. See Geologist's Notebook, No. 1, page 32, for details of test pit activities. Test pit subsequently filled. No samples taken for chemical analysis. Due to shallow groundwater table, filling in of test pit ___ resulted in a very soft and wet area. A mound was developed and the area roped off.
9. Express carrier picked up samples (see Sample Logbook, pages 42 through 45) at 17:50 hours. Site activities terminated at 18:22 hours. All personnel off site, gate locked.

_____
Field Operations Leader

ATTACHMENT B-1
EXAMPLE GROUNDWATER SAMPLE LOG SHEET

GROUNDWATER
SAMPLE LOG SHEET

Page ____ of ____

Project Site Name: _____

Project No.: _____

☐ Domestic Well Data
☐ Monitoring Well Data
☐ Other Well Type: _____
☐ QA Sample Type: _____

Sample ID No.: _____

Sample Location: _____

Sampled By: _____

C.O.C. No.: _____

Sampling Data

Date:	pH	S.C.	Temp. (°C)	Turbidity	Color	TBD	TBD	TBD
Time:								
Method:								

Purge Data

Date:	Volume	pH	S.C.	Temp. (°C)	Turbidity	Color	TBD	TBD
Method:	Initial							
Monitor Reading (ppm):	1							
Well Casing Dia. & Material Type:	2							
	3							
Total Well Depth (TD):	4							
Static Water Level (WL):	5							
TD-WL (ft.) =								
One Casing Volume: (gal/L)								
Start Purge (hrs.):								
End Purge (hrs.):								
Total Purge Time (min):								
Total Amount Purged (gal/L):								

Analysis	Preservative	Container Requirements	Collected (✓)

Observations/Notes:

Circle if Applicable:		Signature(s):
MS/MSD	Duplicate ID No:	

TBD: To Be Determined

ATTACHMENT B-2
EXAMPLE SURFACE WATER SAMPLING LOG SHEET

SURFACE WATER SAMPLING LOG SHEET

Page ____ of ____

Project Site Name: _____ Sample ID No.: _____

Project No.: _____ Sample Location: _____

☐ Spring ☐ Pond Sampled By: _____

☐ Stream ☐ Lake

☐ Other _____

☐ QA Sample Type: _____ C.O.C. No.: _____

Sample Data		
Date and Time	Method	Depth

pH	S.C.	Temp. (°C)	Turbidity	Color	TBD	TBD	TBD

Analysis	Preservative	Container Requirements	Collected (✓)

Observations/Notes:

Circle if Applicable:		Signature(s):
MS/MSD	Duplicate ID No.:	

TBD: To Be Determined

ATTACHMENT B-3
EXAMPLE SOIL/SEDIMENT SINGLE SAMPLE LOG SHEET

SOIL/SEDIMENT
SINGLE SAMPLE LOG SHEET

Page ____ of ____

Project Site Name: _____

Project No.: _____

- ☐ Surface Soil
- ☐ Subsurface Soil
- ☐ Sediment
- ☐ Other _____
- ☐ QA Sample Type: _____

Sample ID No.: _____

Sample Location: _____

Sampled By: _____

C.O.C. No.: _____

Sample Method:	Composite Sample Data		
	Sample	Time	Color/Description
Depth Sampled:			
Sample Date and Time:			
Type of Sample			
☐ Grab			
☐ Composite			
☐ Grab-Composite	Grab Sample Data		
☐ High Concentration	Color	Description: (Sand, Clay, Dry, Moist, Wet, etc.)	
☐ Low Concentration			

Analysis	Container Type/Volume	Collected (✓)	Map:

Observations/Notes:

Circle if Applicable:		Signature(s):
MS/MSD	Duplicate ID No:	

ATTACHMENT B-4
CONTAINER SAMPLE LOG SHEET FORM

Brown & Root Environmental

Page ___ of _

☐ Container Data

Case #: _____

By: _____

Project Site Name: _____ Project Site No. _____

Brown & Root Env. Source No. _____ Source Location: _____

Container Source	Container Description
☐ Drum ☐ Bung Top ☐ Lever Lock ☐ Bolted Ring ☐ Other _____ ☐ Bag/Sack ☐ Tank ☐ Other _____	Color: _____ Condition: _____ Markings: _____ Vol. of Contents: _____ Other: _____

Disposition of Sample	Sample Description			
☐ Container Sampled ☐ Container opened but not sampled. Reason: _____ ☐ Container not opened. Reason: _____		Layer 1	Layer 2	Layer 3
	Phase	☐Sol. ☐Liq.	☐Sol. ☐Liq.	☐Sol. ☐Liq.
	Color	_____	_____	_____
	Viscosity	☐L ☐M ☐H	☐L ☐M ☐H	☐L ☐M ☐H
	% of Total Volume	_____	_____	_____
	Other	_____	_____	_____

Monitor Reading:	Type of Sample ☐ Grab ☐ Low Concentration ☐ Composite ☐ High Concentration ☐ Grab-composite
Sample Method:	

Sample Date & Time:	Sample Identification	Organic	Inorganic
Sampled by:			
Signature(s):			
	Date Shipped		
Analysis:	Time Shipped		
	Lab		
	Volume		

ATTACHMENT B-5

SAMPLE LABEL

Brown & Root Environmental PROJECT: _____

STATION LOCATION: _____

DATE: ____/____/____ TIME: _____ hrs.

MEDIA: WATER ☐ SOIL ☐ SEDIMENT ☐ _____ ☐

CONCENTRATION: LOW ☐ MEDIUM ☐ HIGH ☐

TYPE: GRAB ☐ COMPOSITE ☐

ANALYSIS	PRESERVATION
VOA ☐ BNAs ☐	Cool to 4°C ☐
PCBs ☐ PESTICIDES ☐	HNO_3 to pH < 2 ☐
METALS: TOTAL ☐ DISSOLVED ☐	NaOH to pH > 12 ☐
CYANIDE ☐	_____ ☐
_____ ☐	

Sampled by: _____

Remarks:

ATTACHMENT B-6

CHAIN-OF-CUSTODY RECORD FORM
(Original is 8.5 x 11")

PROJECT NO.	PROJECT NAME	NO. OF CONTAINERS	REMARKS
SAMPLERS: *(Signature)*			

STA NO.	DATE	TIME			STATION LOCATION							

Relinquished by: (Signature)	Date/Time	Received by: (Signature)	Relinquished by: (Signature)	Date/Time	Received by: (Signature)
Relinquished by: (Signature)	Date/Time	Received by: (Signature)	Relinquished by: (Signature)	Date/Time	Received by: (Signature)
Relinquished by: (Signature)	Date/Time	Received for Laboratory by: (Signature)	Date/Time	Remarks:	

ATTACHMENT B-7

CHAIN-OF-CUSTODY SEAL

CUSTODY SEAL	**CUSTODY SEAL**
Date _____	**Date** _____
Signature _____	**Signature** _____

ATTACHMENT C-1
EXAMPLE GROUNDWATER LEVEL MEASUREMENT SHEET

GROUNDWATER LEVEL MEASUREMENT SHEET

Page ___ of ___

PROJECT NAME: _____ LOCATION: _____
PROJECT NUMBER: _____ MEASURING DEVICE: _____
PERSONNEL: _____ ADJUSTMENT FACTOR: _____
DATE: _____ REMARKS: _____
WEATHER CONDITIONS: _____

Well or Piezometer Number	Time	Elevation of Reference Point (Feet)*	Water Level Indicator Reading (Feet)*	Groundwater Elevation (Feet)*	Comments

*Measurements to nearest 0.01 foot.

Signature(s): _____

ATTACHMENT C-2
EXAMPLE PUMPING TEST DATA SHEET

PUMPING TEST DATA SHEET

Page ___ of ___

PROJECT NAME: _____
PROJECT NUMBER: _____
PUMPING TEST: [ ]
TEST NUMBER: _____
METHOD OF MEASUREMENT: _____
DATE(s): _____
STATIC H_2O LEVEL (ft) (SO) _____

PUMPING WELL NUMBER: _____
MEASURED WELL NUMBER: _____
STEP DRAW DOWN TEST [ ]
MONITORING POINT: _____
DEPTH CORRECTION (ft) _____
PUMP SETTING (Ft. below monitoring point): _____
DISTANCE FROM PUMPING WELL (ft) (r): _____

PUMPING TEST PERFORMED BY: _____
REMARKS: _____

MILITARY TIME	ELAPSED TIME SINCE PUMP START OR STOP (Min.)	WATER LEVEL (Ft.)	CORRECTION (Ft.)	DRAW DOWN OR RECOVERY (Ft.)	FLOW METER READING (Gals.)	PUMPING RATE (GPM)	REMARKS

SIGNATURE(s): _____

ATTACHMENT C-3

PACKER TEST REPORT FORM

PROJECT: _____ **PROJECT NO.:** _____ **TEST NO:** _____ **PAGE** ____ **OF** ____

BORING NO.: _____ **CASING DEPTH:** _____ **CONTRACTOR:** _____ **STATIC WATER LEVEL** _____

TEST INTERVAL: _____ **BY:** _____ **CHECKED:** _____ **PACKER PRESSURE** _____

Flow Test					Calculated Results							
Pressure, P (psi)	Elapsed Time (min)	Flow Reading	Δ Flow, ΔQ (ft³)	Δ Flow, ΔQ (gal)	Flow Rate Q (gal/min)	H_1* (ft)	Hp(ft) = 2.31 (psi)	H_2* (ft)	H = Hp + (H1 or H2)	Cp	K (ft/yr) = Cp·Q/H	K (cm/sec) = 9.67 x 10⁻⁷ K (ft/yr)

TEST CONFIGURATION

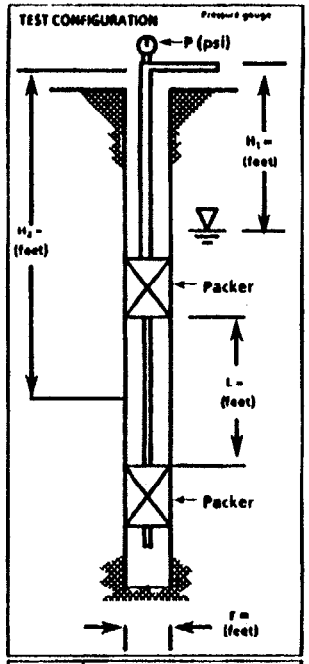

Length of Test Section in feet, L	Cp Limiting Bit Size			
	CP (1.5")	AX (1.875")	BX (2.31")	NX (3")
1	31,000	28,500	25,000	22,300
2	18,400	18,100	16,000	15,500
5	9,000	9,300	8,000	8,400
8	6,800	6,500	6,100	5,800
10	5,700	5,000	5,400	4,900
15	4,100	3,800	3,400	3,600
20	3,200	3,100	3,000	2,800

CP = (1/(2 π L)) ln(L/r) (70,315 5)
7.48 Gallons = 1 Ft³
1 psi = 2.31 ft head

* H_1 is used when the test length is below the water table.
H_2 is used when the test length is above the water table.

Remarks: _____

Subject	Number	Page
FIELD DOCUMENTATION	SA-6.3	19 of 32
Revision 0		Effective Date 03/01/96

ATTACHMENT C-4
EXAMPLE BORING LOG

BORING LOG Page___ of___

PROJECT NAME: _____ BORING NUMBER: _____
PROJECT NUMBER: _____ DATE : _____
DRILLING COMPANY: _____ GEOLOGIST: _____
WATER LEVEL DATA: _____

Sample No. and Type or RQD	Depth (Ft.) or Run No.	Blows/ 6" or RQD (%)	Sample Recovery/ Sample Length	Lithology Change (Depth/Ft.) or Screened Interval	MATERIAL DESCRIPTION: Soil Density/ Consistency or Rock Hardness	Color	Material Classification	* USCS	Remarks	PID or FID Reading (ppm)

*When rock coring enter rock brokeness.

CONVERTED TO WELL : ___ Yes ___ No; WELL I.D.#: _____
REMARKS: _____

Signature(s): _____

LEGEND

SOIL TERMS

UNIFIED SOIL CLASSIFICATION (USCS)

COARSE-GRAINED SOILS — More Than Half of Material is LARGER Than No. 200 Sieve Size

FIELD IDENTIFICATION PROCEDURES (Excluding Particles Larger Than 3 Inches and Basing Fractions on Estimated Weights)			GROUP SYMBOL	TYPICAL NAMES
GRAVELS (50%(+)>1/4"Ø)	CLEAN GRAVELS (Low % Fines)	Wide range in grain size and substantial amounts of all intermediate particle sizes.	GW	Well graded gravels, gravel-sand mixtures, little or no fines.
		Predominantly one size or a range of sizes with some intermediate sizes missing.	GP	Poorly graded gravels, gravel-sand mixtures, little or no fines.
	GRAVELS W/FINES (High % Fines)	Non-plastic fines (for identification procedures, see ML)	GM	Silty gravels, poorly graded gravel-sand-silt mixtures.
		Plastic fines (for identification procedures, see CL)	GC	Clayey gravels, poorly graded gravel-sand-clay mixtures.
SANDS 50%(+)<1/4"Ø	CLEAN SANDS (Low % Fines)	Wide range in grain size and substantial amounts of all intermediate particle sizes.	SW	Well graded sand, gravelly sands, little or no fines.
		Predominantly one size or a range of sizes with some intermediate sizes missing.	SP	Poorly graded sands, gravelly sands, little or no fines.
	SANDS W/FINES (High % Fines)	Non-plastic fines (for identification procedures, see MCL)	SM	Silty sands, poorly graded sand-silt mixtures.
		Plastic fines (for identification procedures, see CL)	SC	Clayey sands, poorly graded sand-clay mixtures.

FINE-GRAINED SOILS — More Than Half of Material is SMALLER Than No. 200 Sieve Size

FIELD IDENTIFICATION PROCEDURES (Excluding Particles Larger Than 3 Inches and Basing Fractions on Estimated Weights)	Identification Procedures on Fraction Smaller than No. 40 Sieve Size				GROUP SYMBOL	TYPICAL NAMES
		DRY STRENGTH (Crushing Characteristics)	DILATANCY (Reaction to Shaking)	TOUGHNESS (Consistency Near Plastic Limit)		
SILTS AND CLAYS Liquid Limit <50		None to Slight	Quick to Slow	None	ML	Inorganic silts and very fine sands, rock flour, silty or clayey fine sands with slight plasticity.
		Medium to High	None to Very Slow	Medium	CL	Inorganic clays of low to medium plasticity, gravelly clays, sandy clays, silty clays, lean clays.
		Slight to Medium	Slow	Slight	OL	Organic silts and organic silt-clays of low plasticity.
SILTS AND CLAYS Liquid Limit >50		Slight to Medium	Slow to None	Slight to Medium	MH	Inorganic silts, micaceous or diatomaceous fine sandy or silty soils, elastic silts.
		High to Very High	None	High	CH	Inorganic clays of high plasticity, fat clays.
		Medium to High	None to Very Slow	Slight to Medium	OH	Organic clays of medium to high plasticity.
HIGHLY ORGANIC SOILS	Readily identified by color, odor, spongy feel and frequently by fibrous texture.				Pt	Peat and other organic soils

Boundary classifications: Soils possessing characteristics of two groups are designated by combining group symbols. For example, GW-GC, well graded gravel-sand mixture with clay binder.
All sieve sizes on this chart are U.S. Standard.

DENSITY OF GRANULAR SOILS

DESIGNATION	STANDARD PENETRATION RESISTANCE-BLOWS/FOOT
Very Loose	0-4
Loose	5-10
Medium Loose	11-30
Dense	31-50
Very Dense	Over 50

CONSISTENCY OF COHESIVE SOILS

CONSISTENCY	UNC COMPRESSIVE STRENGTH (TONS/SQ. FT.)	STANDARD PENETRATION RESISTANCE-BLOWS/FOOT	FIELD IDENTIFICATION METHODS
Very Soft	Less than 0.25	0 to 2	Easily pentrated several inches by fist
Soft	0.25 to 0.50	2 to 4	Easily penetrated several inches by thumb.
Medium Stiff	0.50 to 1.0	4 to 8	Can be penetrated several inches by thumb.
Stiff	1.0 to 2.0	8 to 15	Readily indented by thumb.
Very Stiff	2.0 to 4.0	15 to 30	Readily indented by thumbnail.
Hard	More than 4.0	Over 30	Indented with difficulty by thumbnail.

ROCK TERMS

ROCK HARDNESS (FROM CORE SAMPLES)

Descriptive Terms	Screwdriver or Knife Effects	Hammer Effects
Soft	Easily Gouged	Crushes when pressed with hammer
Medium Soft	Can be Gouged	Breaks (one blow); crumbly edges
Medium Hard	Can be scratched	Breaks (one blow); sharp edges
Hard	Cannot be scratched	Breaks conchoidally (several blows); sharp edges

ROCK BROKENESS

Descriptive Terms	Abbreviation	Spacing
Very Broken	(V. Br.)	0-2"
Broken	(Br.)	2"-1'
Blocky	(Bl.)	1'-3"
Massive	(M.)	3'-10'

LEGEND:

SOIL SAMPLES - TYPES

S-2" Split-Barrel Sample

ST-3" O.D. Undisturbed Sample

O - Other Samples, Specify in Remarks

ROCK SAMPLES - TYPES

X-NX (Conventional) Core (-2 1/8" O.D.)

Q-NQ (Wireline) Core (-1-7/8" O.D.)

Z - Other Core Sizes, Specify in Remarks

WATER LEVELS

12/18 ▼ 12.6' Initial Level w/Date & Depth

12/18 ▼ 12.6' Stabilized Level w/Date & Depth

ATTACHMENT C-5
EXAMPLE OVERBURDEN MONITORING WELL SHEET

BORING NO.: _____

OVERBURDEN
MONITORING WELL SHEET

PROJECT _____ LOCATION _____
PROJECT NO. _____ BORING _____
ELEVATION _____ DATE _____
FIELD GEOLOGIST _____

DRILLER _____
DRILLING METHOD _____
DEVELOPMENT METHOD _____

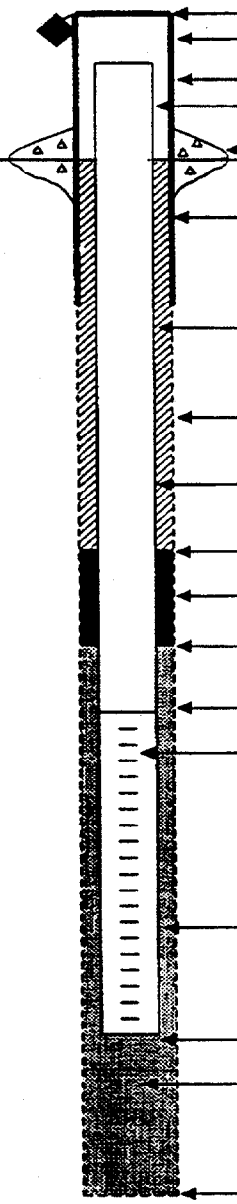

ELEVATION OF TOP OF SURFACE CASING : _____
ELEVATION OF TOP OF RISER PIPE: _____

STICK - UP TOP OF SURFACE CASING: _____
STICK - UP RISER PIPE : _____

TYPE OF SURFACE SEAL: _____

I.D. OF SURFACE CASING: _____
TYPE OF SURFACE CASING: _____

RISER PIPE I.D. _____
TYPE OF RISER PIPE: _____

BOREHOLE DIAMETER: _____

TYPE OF BACKFILL: _____

ELEVATION / DEPTH TOP OF SEAL: _____ / _____

TYPE OF SEAL: _____

DEPTH TOP OF SAND PACK: _____

ELEVATION / DEPTH TOP OF SCREEN: _____ / _____

TYPE OF SCREEN: _____

SLOT SIZE x LENGTH: _____

I.D. OF SCREEN: _____

TYPE OF SAND PACK: _____

ELEVATION / DEPTH BOTTOM OF SCREEN: _____ / _____

ELEVATION / DEPTH BOTTOM OF SAND PACK: _____ / _____

TYPE OF BACKFILL BELOW OBSERVATION WELL: _____

ELEVATION / DEPTH OF HOLE: _____ / _____

ATTACHMENT C-5A
EXAMPLE OVERBURDEN MONITORING WELL SHEET (FLUSHMOUNT)

BORING NO.: _____

MONITORING WELL SHEET

PROJECT _____ LOCATION _____
PROJECT NO. _____ BORING _____
ELEVATION _____ DATE _____
FIELD GEOLOGIST _____

DRILLER _____
DRILLING METHOD _____
DEVELOPMENT METHOD _____

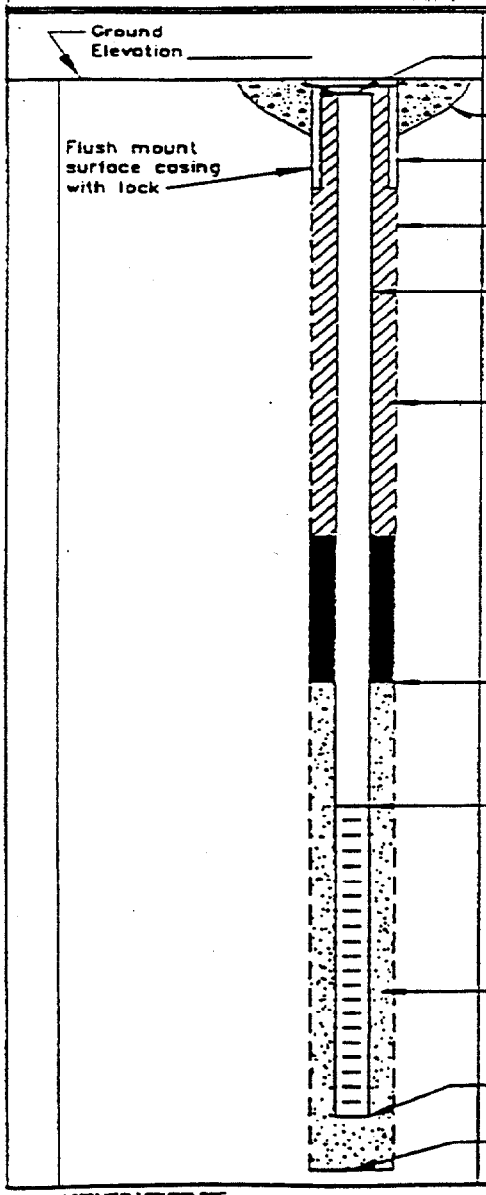

ELEVATION TOP OF RISER: _____
TYPE OF SURFACE SEAL: _____
TYPE OF PROTECTIVE CASING: _____
I.D. OF PROTECTIVE CASING: _____
DIAMETER OF HOLE: _____
TYPE OF RISER PIPE: _____
RISER PIPE I.D.: _____
TYPE OF BACKFILL/SEAL: _____
_____
DEPTH/ELEVATION TOP OF SAND: _____ / _____
DEPTH/ELEVATION TOP OF SCREEN: _____ / _____
TYPE OF SCREEN: _____
SLOT SIZE x LENGTH: _____
TYPE OF SAND PACK: _____
DIAMETER OF HOLE IN BEDROCK: _____
DEPTH/ELEVATION BOTTOM OF SCREEN: _____ / _____
DEPTH/ELEVATION BOTTOM OF SAND: _____ / _____
DEPTH/ELEVATION BOTTOM OF HOLE: _____ / _____
BACKFILL MATERIAL BELOW SAND: _____

ATTACHMENT C-6
EXAMPLE CONFINING LAYER MONITORING WELL SHEET

BORING NO.: _____

CONFINING LAYER
MONITORING WELL SHEET

PROJECT _____ LOCATION _____
PROJECT NO. _____ BORING _____
ELEVATION _____ DATE _____
FIELD GEOLOGIST _____

DRILLER _____
DRILLING METHOD _____
DEVELOPMENT METHOD _____

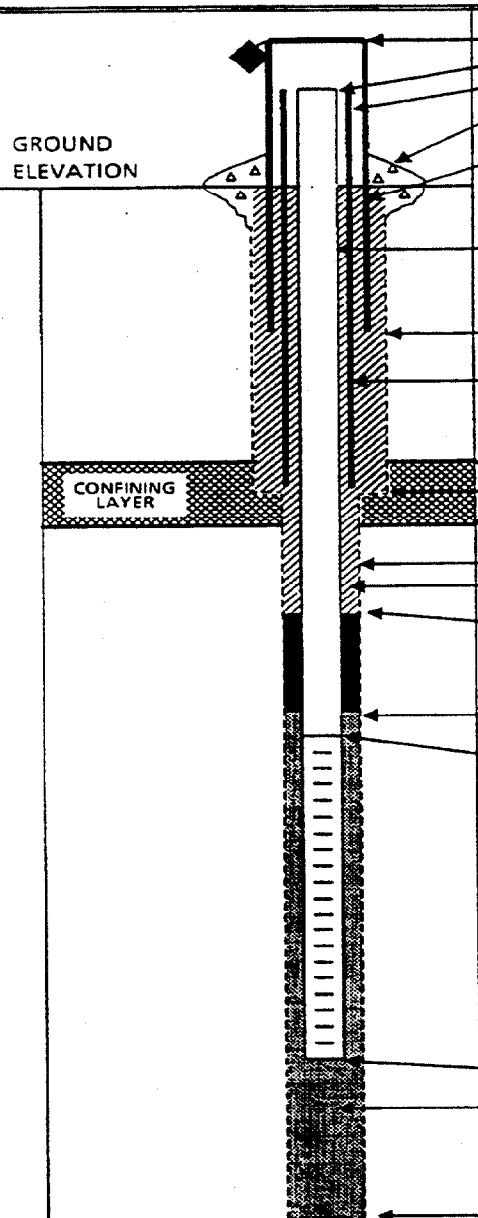

ELEVATION OF TOP OF SURFACE CASING : _____
ELEVATION OF TOP OF RISER PIPE: _____
ELEVATION TOP OF PERM. CASING: _____
TYPE OF SURFACE SEAL: _____

I.D. OF SURFACE CASING: _____
TYPE OF SURFACE CASING: _____

RISER PIPE I.D. _____
TYPE OF RISER PIPE: _____

BOREHOLE DIAMETER: _____

PERM. CASING I.D. _____
TYPE OF CASING & BACKFILL: _____

ELEVATION / DEPTH TOP CONFINING LAYER: _____
ELEVATION / DEPTH BOTTOM OF CASING: _____
ELEVATION / DEPTH BOT. CONFINING LAYER: _____

BOREHOLE DIA. BELOW CASING: _____
TYPE OF BACKFILL: _____

ELEVATION / DEPTH TOP OF SEAL: _____
TYPE OF SEAL: _____

DEPTH TOP OF SAND PACK: _____

ELEVATION/DEPTH TOP OF SCREEN: _____
TYPE OF SCREEN: _____

TYPE OF SAND PACK: _____

ELEVATION / DEPTH BOTTOM OF SCREEN: _____

ELEVATION / DEPTH BOTTOM OF SAND PACK: _____
TYPE OF BACKFILL BELOW OBSERVATION WELL: _____

ELEVATION / DEPTH OF HOLE: _____

ATTACHMENT C-7
EXAMPLE BEDROCK MONITORING WELL SHEET - OPEN HOLE WELL

BORING NO.: _____

BEDROCK
MONITORING WELL SHEET
OPEN HOLE WELL

PROJECT _____ LOCATION _____
PROJECT NO. _____ BORING _____
ELEVATION _____ DATE _____
FIELD GEOLOGIST _____

DRILLER _____
DRILLING METHOD _____
DEVELOPMENT METHOD _____

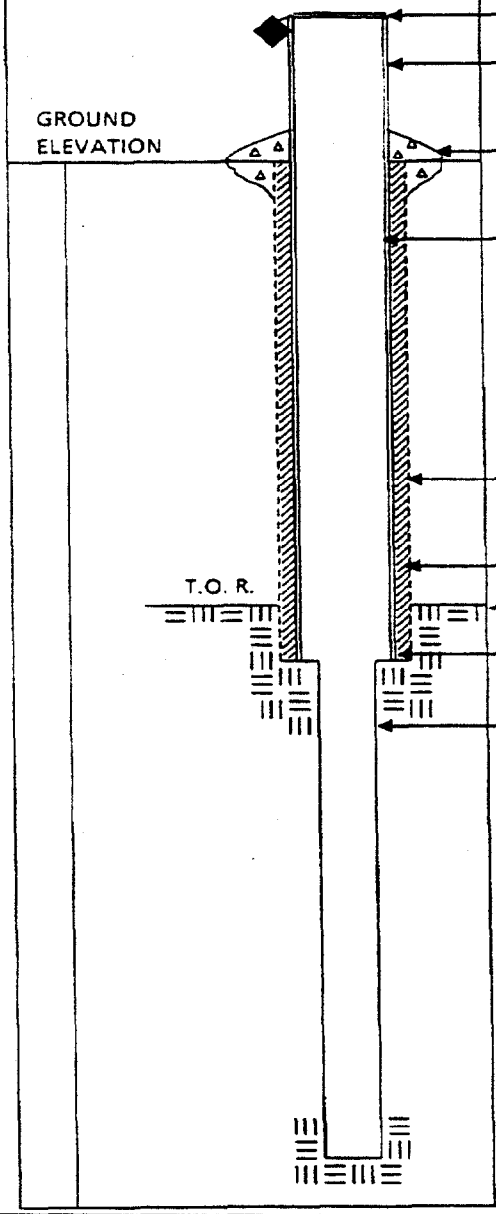

ELEVATION OF TOP OF CASING: _____

STICK UP OF CASING ABOVE GROUND SURFACE: _____

TYPE OF SURFACE SEAL: _____

I.D. OF CASING: _____
TYPE OF CASING: _____

TEMP. / PERM.: _____

DIAMETER OF HOLE: _____

TYPE OF CASING SEAL: _____

DEPTH TO TOP OF ROCK: _____

DEPTH TO BOTTOM CASING: _____

DIAMETER OF HOLE IN BEDROCK: _____

DESCRIBE IF CORE / REAMED WITH BIT:

_____
_____
_____

DESCRIBE JOINTS IN BEDROCK AND DEPTH:

_____
_____
_____

ELEVATION / DEPTH OF HOLE: _____ / _____

ATTACHMENT C-8
EXAMPLE BEDROCK MONITORING WELL SHEET - WELL INSTALLED IN BEDROCK

BORING NO.: _____

BEDROCK
MONITORING WELL SHEET
WELL INSTALLED IN BEDROCK

PROJECT _____ LOCATION _____
PROJECT NO. _____ BORING _____
ELEVATION _____ DATE _____
FIELD GEOLOGIST _____

DRILLER _____
DRILLING METHOD _____
DEVELOPMENT METHOD _____

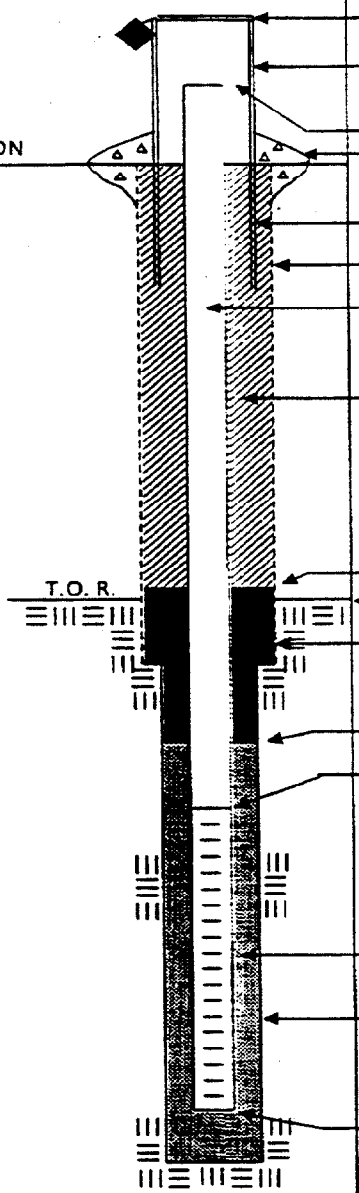

ELEVATION OF TOP OF SURFACE CASING: _____

STICK UP OF CASING ABOVE GROUND SURFACE: _____

ELEVATION TOP OF RISER: _____

TYPE OF SURFACE SEAL: _____

I.D. OF SURFACE CASING: _____

DIAMETER OF HOLE: _____

RISER PIPE I.D.: _____

TYPE OF RISER PIPE: _____

TYPE OF BACKFILL: _____

ELEVATION / DEPTH TOP OF SEAL: ____/____

ELEVATION / DEPTH TOP OF BEDROCK: ____/____

TYPE OF SEAL: _____

ELEVATION / DEPTH TOP OF SAND: ____/____

ELEVATION / DEPTH TOP OF SCREEN: ____/____

TYPE OF SCREEN: _____

SLOT SIZE x LENGTH: _____

I.D. SCREEN: _____

TYPE OF SAND PACK: _____

DIAMETER OF HOLE IN BEDROCK:

CORE / REAM: _____

ELEVATION / DEPTH BOTTOM SCREEN: ____/____

ELEVATION / DEPTH BOTTOM OF HOLE: ____/____

ATTACHMENT C-8A
EXAMPLE BEDROCK MONITORING WELL SHEET
WELL INSTALLED IN BEDROCK (FLUSHMOUNT)

BORING NO.: _____

BEDROCK
MONITORING WELL SHEET
WELL INSTALLED IN BEDROCK

PROJECT: _____	LOCATION: _____	DRILLER: _____
PROJECT NO.: _____	BORING: _____	DRILLING METHOD: _____
ELEVATION: _____	DATE: _____	DEVELOPMENT METHOD: _____
FIELD GEOLOGIST: _____		

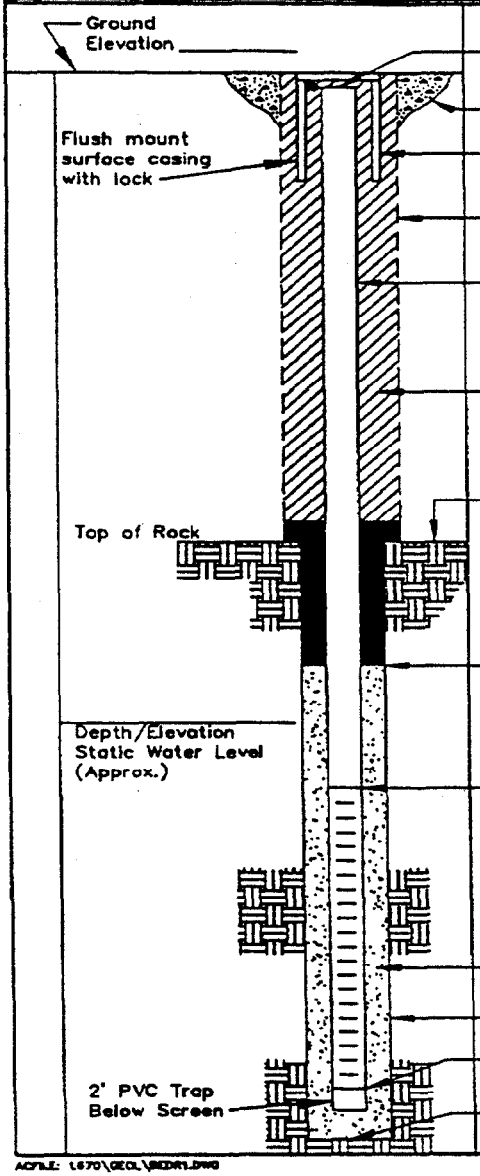

ELEVATION TOP OF RISER: _____

TYPE OF SURFACE SEAL: _____

TYPE OF PROTECTIVE CASING: _____

I.D. OF PROTECTIVE CASING: _____

DIAMETER OF HOLE: _____

TYPE OF RISER PIPE: _____

RISER PIPE I.D.: _____

TYPE OF BACKFILL/SEAL: _____

_____

DEPTH/ELEVATION TOP OF BEDROCK: _____/_____

DEPTH/ELEVATION TOP OF SAND: _____/_____

DEPTH/ELEVATION TOP OF SCREEN: _____/_____

TYPE OF SCREEN: _____

SLOT SIZE x LENGTH: _____

TYPE OF SAND PACK: _____

DIAMETER OF HOLE IN BEDROCK: _____

DEPTH/ELEVATION BOTTOM OF SCREEN: _____/_____

DEPTH/ELEVATION BOTTOM OF SAND: _____/_____

DEPTH/ELEVATION BOTTOM OF HOLE: _____/_____

BACKFILL MATERIAL BELOW SAND: _____

ACFILE: L670\GEOL\BEDR1.DWG

ATTACHMENT C-9
EXAMPLE TEST PIT LOG

TEST PIT LOG

Brown & Root Environmental

PROJECT: _____ TEST PIT NO.:
PROJECT NO _____ DATE: _____
LOCATION: _____
FIELD GEOLOGIST: _____

DEPTH (ft.)	LITHOLOGY CHANGE (Depth ft.)	MATERIAL DESCRIPTION (Soil Density / Consistency, Color)	USCS	REMARKS

Test Pit Cross Section and / or Plan View

REMARKS _____

PHOTO LOG _____ TEST PIT _____

PAGE ____ OF ____

ATTACHMENT D
EXAMPLE EQUIPMENT CALIBRATION LOG

Brown & Root Environmental

EQUIPMENT CALIBRATION LOG

INSTRUMENT NAME / MODEL : _____

JOB NAME : _____

MANUFACTURER : _____

JOB NUMBER : _____

CALIBRATION DATE	INITIAL SETTINGS	STANDARDS USED	PROCEDURE	ADJUSTMENTS MADE	FINAL SETTINGS	SIGNATURE	COMMENTS

ATTACHMENT E
EXAMPLE DAILY ACTIVITIES RECORD

Brown & Root Environmental

DAILY ACTIVITIES RECORD

PROJECT _____ LOCATION _____
CLIENT _____ ARRIVAL TIME _____ JOB NO. _____
DATE _____ DEPARTURE TIME _____
CONTRACTOR _____ DRILLER _____
BORING NO. _____ HNUS REPRESENTATIVE _____

ITEM	QUANTITY ESTIMATE	QUANTITY TODAY	PREVIOUS TOTAL QUANTITY	CUMULATIVE QUANTITY TO DATE

COMMENTS: _____

APPROVED BY:

_____ _____
HNUS FIELD REPRESENTATIVE DRILLER OR REPRESENTATIVE

ATTACHMENT F
FIELD TRIP SUMMARY REPORT
PAGE 1 OF 2

SUNDAY

Date: _____ Personnel: _____

Weather: _____ Onsite: _____

Site Activities: _____

_____

_____

_____

MONDAY

Date: _____ Personnel: _____

Weather: _____ Onsite: _____

Site Activities: _____

_____

_____

_____

TUESDAY

Date: _____ Personnel: _____

Weather: _____ Onsite: _____

Site Activities: _____

_____

_____

_____

WEDNESDAY

Date: _____ Personnel: _____

Weather: _____ Onsite: _____

Site Activities: _____

_____

_____

_____

ATTACHMENT F
PAGE 2 OF 2
FIELD TRIP SUMMARY REPORT

THURSDAY

Date: _____ Personnel: _____

Weather: _____ Onsite: _____

Site Activities: _____

_____

_____

_____

FRIDAY

Date: _____ Personnel: _____

Weather: _____ Onsite: _____

Site Activities: _____

_____

_____

_____

SATURDAY

Date: _____ Personnel: _____

Weather: _____ Onsite: _____

Site Activities: _____

_____

_____

_____

TABLE OF CONTENTS

SECTION **PAGE**

1.0 PURPOSE 2

2.0 SCOPE 2

3.0 GLOSSARY 2

4.0 RESPONSIBILITIES 2

5.0 PROCEDURES 2

5.1 Drilling Equipment 2
5.2 Sampling Equipment 3
5.2.1 Bailers and Bailing Line 3
5.2.2 Sampling Pumps 4
5.2.3 Filtering Equipment 4
5.2.4 Other Sampling Equipment 5
5.3 Field Analytical Equipment 5
5.3.1 Water Level Indicators 5
5.3.2 Probes 5
5.4 Waste Handling 5
5.5 Sources of Contaminated Materials and Containment Methods 6
5.5.1 Decontamination Solutions 6
5.5.2 Disposal Equipment 6
5.5.3 Drilling Muds and Well-Development Fluids 6
5.5.4 Spill-Contaminated Materials 7
5.6 Disposal of Contaminated Materials 7

6.0 REFERENCES 8

ATTACHMENTS

A TWO TYPES OF MUD PITS USED IN WELL DRILLING 9

1.0 PURPOSE

The purpose of this procedure is to provide guidelines regarding the appropriate procedures to be followed when decontaminating drilling equipment, monitoring well materials, chemical sampling equipment and field analytical equipment.

2.0 SCOPE

This procedure addresses drilling equipment and monitoring well materials decontamination, as well as chemical sampling and field analytical equipment decontamination. This procedure also provides general reference information on the control of contaminated materials.

3.0 GLOSSARY

None.

4.0 RESPONSIBILITIES

Project Manager - Responsible for ensuring that all field activities are conducted in accordance with approved project plan(s) requirements.

Field Operations Leader (FOL) - Responsible for the onsite verification that all field activities are performed in compliance with approved Standards Operating Procedures or as otherwise dictated by the approved project plan(s).

5.0 PROCEDURES

To ensure that analytical chemical results reflect actual contaminant concentrations present at sampling locations, the various drilling equipment and chemical sampling and analytical equipment used to acquire the environment sample must be properly decontaminated. Decontamination minimizes the potential for cross-contamination between sampling locations, and the transfer of contamination offsite.

5.1 Drilling Equipment

Prior to the initiation of a drilling program, all drilling equipment involved in field sampling activities shall be decontaminated by steam cleaning at a predetermined area. The steam cleaning procedure shall be performed using a high-pressure spray of heated potable water producing a pressurized stream of steam. This steam shall be sprayed directly onto all surfaces of the various equipment which might contact environmental samples. The decontamination procedure shall be performed until all equipment is free of all visible potential contamination (dirt, grease, oil, noticeable odors, etc.) In addition, this decontamination procedure shall be performed at the completion of each sampling and/or drilling location, including soil borings, installation of monitoring wells, test pits, etc. Such equipment shall include drilling rigs, backhoes, downhole tools, augers, well casings, and screens. Where the drilling rig is set to perform multiple borings at a single area of concern, the steam-cleaning of the drilling rig itself may be waived with proper approval. Downhole equipment, however, must always be steam-cleaned between borings. Where PVC well casings are to be installed, decontamination is not required if the manufacturer provides these casings in factory-sealed, protective, plastic sleeves (so long as the protective packaging is not compromised until immediately before use.

The steam cleaning area shall be designed to contain decontamination wastes and waste waters and can be a lined excavated pit or a bermed concrete or asphalt pad. For the latter, a floor drain must be

provided which is connected to a holding facility. A shallow above-ground tank may be used or a pumping system with discharge to a waste tank may be installed.

In certain cases such an elaborate decontamination pad is not possible. In such cases, a plastic lined gravel bed pad with a collection system may serve as an adequate decontamination area. Alternately, a lined sloped pad with a collection pump installed at the lower end may be permissible. The location of the steam cleaning area shall be onsite in order to minimize potential impacts at certain sites.

Guidance to be used when decontaminating drilling equipment shall include:

- As a general rule, any part of the drilling rig which extends over the borehole, shall be steam cleaned.
- All drilling rods, augers, and any other equipment which will be introduced to the hole shall be steam cleaned.
- The drilling rig, all rods and augers, and any other potentially contaminated equipment shall be decontaminated between each well location to prevent cross contamination of potential hazardous substances.

Prior to leaving at the end of each work day and/or at the completion of the drilling program, drilling rigs and transport vehicles used onsite for personnel or equipment transfer shall be steam cleaned, as practicable. A drilling rig left at the drilling location does not need to be steam cleaned until it is finished drilling at that location.

5.2 Sampling Equipment

5.2.1 Bailers and Bailing Line

The potential for cross-contamination between sampling points through the use of a common bailer or its attached line is high unless strict procedures for decontamination are followed. For this reason, it is preferable to dedicate an individual bailer and its line to each sample point, although this does not eliminate the need for decontamination of dedicated bailers. For non-dedicated sampling equipment, the following conditions and/or decontamination procedures must be followed.

Before the initial sampling and after each successive sampling point, the bailer must be decontaminated. The following steps are to be performed when sampling for organic contaminants. Note: contract-specific requirements may permit alternative procedures.

- Potable water rinse
- Alconox or Liquinox detergent wash
- Scrubbing of the line and bailer with a scrub brush (may be required if the sample point is heavily contaminated with heavy or extremely viscous compounds)
- Potable water rinse
- Rinse with 10 percent nitric acid solution*
- Deionized water rinse

---

* Due to the leaching ability of nitric acid on stainless steel, this step is to be omitted if a stainless steel sampling device is being used and metals analysis is required with detection limits less than approximately 50 ppb.

- Acetone or methanol rinse (in some EPA Regions, isopropanol is used instead)
- Hexane rinse**
- Copious distilled/Deionized water rinse
- Air dry

If sampling for volatile organic compounds (VOCs) only, the nitric acid, acetone, methanol, and hexane rinses may be omitted. Only reagent grade or purer solvents are to be used for decontamination. When isopropanol is used, the bailer must be thoroughly dry before using to acquire the next sample.

In general, specially purchased pre-cleaned disposable sampling equipment is not decontaminated (nor is an equipment rinsate blank collected) so long as the supplier has provided certification of cleanliness. If decontamination is performed on several bailers at once (i.e., in batches), bailers not immediately used may be completely wrapped in aluminum foil (shiny-side toward equipment) and stored for future use. When batch decontamination is performed, one equipment rinsate is generally collected from one of the bailers belonging to the batch before it is used for sampling.

It is recommended that clean, dedicated braided nylon or polypropylene line be employed with each bailer use.

5.2.2 Sampling Pumps

Most sampling pumps are low volume (less than 2 gpm) pumps. These include peristaltic, diaphragm, air-lift, pitcher and bladder pumps, to name a few. If these pumps are used for sampling from more than one sampling point, they must be decontaminated prior to initial use and after each use.

The procedures to be used for decontamination of sampling pumps compare to those used for a bailer except that the 10 percent nitric acid solution is omitted. Each of the liquid factions is to be pumped through the system. The amount of pumping is dependent upon the size of the pump and the length of the intake and discharge hoses. Certain types of pumps are unacceptable for sampling purposes. For peristaltic pumps, the tubing is replaced rather than cleaned.

An additional problem is introduced when the pump relies on absorption of water via an inlet or outlet hose. For organic sampling, this hose should be Teflon. Other types of hoses leach organics (especially phthalate esters) into the water being sampled or adsorb organics from the sampled water. For all other sampling, the hose should be Viton, polyethylene, or polyvinyl chloride (listed in order of preference). Whenever possible, dedicated hoses should be used. It is preferable that these types of pumps not be used for sampling, only for purging.

5.2.3 Filtering Equipment

On occasion, the sampling plan may require acquisition of filtered groundwater samples. Field-filtering is addressed in SOP SA-6.1 and should be conducted as soon after sample acquisition as possible. To this end, three basic filtration systems are most commonly used: the in-line disposable Teflon filter, the inert gas over-pressure filtration system, and the vacuum filtration system.

For the in-line filter, decontamination is not required since the filter cartridge is disposable, however, the cartridge must be disposed of in an approved receptacle and the intake and discharge lines must still be decontaminated or replaced before each use.

** If sampling for pesticides, PCBs, or fuels.

For the over-pressure and the vacuum filtration systems, the portions of the apparatus which come in contact with the sample must be decontaminated as outlined in the paragraphs describing the decontamination of bailers. (Note: Varieties of both of these systems come equipped from the manufacturer with Teflon-lined surfaces for those that would come into contact with the sample. These filtration systems are preferred when decontamination procedures must be employed.)

5.2.4 Other Sampling Equipment

Field tools such as trowels and mixing bowls are to be decontaminated in the same manner as described above.

5.3 Field Analytical Equipment

5.3.1 Water Level Indicators

Water level indicators that come into contact with groundwater must be decontaminated using the following steps:

- Rinse with potable water
- Rinse with deionized water
- Acetone or methanol rinse (unless otherwise directed by manufacturer)
- Rinse with deionized water

Water level indicators that do not come in contact with the groundwater but may encounter incidental contact during installation or retrieval need only undergo the first and last steps stated above.

5.3.2 Probes

Probes (e.g., pH or specific-ion electrodes, geophysical probes, or thermometers) which would come in direct contact with the sample, will be decontaminated using the procedures specified above unless manufacturer's instructions indicate otherwise (e.g., dissolved oxygen probes). Probes that contact a volume of groundwater not used for laboratory analyses can be rinsed with deionized water. For probes which make no direct contact, (e.g., OVA equipment) the probe is self-cleaning when exposure to uncontaminated air is allowed and the housing can be wiped clean with paper-towels or cloth wetted with alcohol.

5.4 Waste Handling

For the purposes of these procedures, contaminated materials are defined as any byproducts of field activities that are suspected or known to be contaminated with hazardous substances. These byproducts include such materials as decontamination solutions, disposable equipment, drilling muds, well-development fluids, and spill-contaminated materials and Personal Protection Equipment (PPE).

The procedures for obtaining permits for investigations of sites containing hazardous substances are not clearly defined at present. In the absence of a clear directive to the contrary by the EPA and the states, it must be assumed that hazardous wastes generated during field activities will require compliance with Federal agency requirements for generation, storage, transportation, or disposal. In addition, there may be state regulations that govern the disposal action. This procedure exclusively describes the technical methods used to control contaminated materials.

The plan documents for site activities must include a description of control procedures for contaminated materials. This planning strategy must assess the type of contamination, estimate the amounts that would be produced, describe containment equipment and procedures, and delineate storage or disposal methods. As a general policy, it is wise to select investigation methods that minimize the generation of contaminated spoils. Handling and disposing of potentially hazardous materials can be dangerous and expensive. Until sample analysis is complete, it is assumed that all produced materials are suspected of contamination from hazardous chemicals and require containment.

5.5 Sources of Contaminated Materials and Containment Methods

5.5.1 Decontamination Solutions

All waste decontamination solutions and rinses must be assumed to contain the hazardous chemicals associated with the site unless there are analytical or other data to the contrary. The waste solution volumes could vary from a few gallons to several hundred gallons in cases where large equipment required cleaning.

Containerized waste rinse solutions are best stored in 55-gallon drums (or equivalent containers) that can be sealed until ultimate disposal at an approved facility. Larger equipment such as backhoes and tractors must be decontaminated in an area provided with an impermeable liner and a liquid collection system. A decontamination area for large equipment could consist of a bermed concrete pad with a floor drain leading to a buried holding tank.

5.5.2 Disposable Equipment

Disposable equipment that could become contaminated during use typically includes PPE, rubber gloves, boots, broken sample containers, and cleaning-wipes. These items are small and can easily be contained in 55-gallon drums with lids. These containers should be closed at the end of each work day and upon project completion to provide secure containment until disposed.

5.5.3 Drilling Muds and Well-Development Fluids

Drilling muds and well-development fluids are materials that may be used in groundwater monitoring well installations. Their proper use could result in the surface accumulation of contaminated liquids and muds that require containment. The volumes of drilling muds and well-development fluids used depend on well diameter and depth, groundwater characteristics, and geologic formations. There are no simple mathematical formulas available for accurately predicting these volumes. It is best to rely on the experience of reputable well drillers familiar with local conditions and the well installation techniques selected. These individuals should be able to estimate the sizes (or number) of containment structures required. Since guesswork is involved, it is recommended that an slight excess of the estimated amount of containers required will be available.

Drilling muds are mixed and stored in what is commonly referred to as a mud pit. This mud pit consists of a suction section from which drilling mud is withdrawn and pumped through hoses, down the drill pipe to the bit, and back up the hole to the settling section of the mud pit. In the settling section, the mud's velocity is reduced by a screen and several flow-restriction devices, thereby allowing the well cuttings to settle out of the mud/fluid.

The mud pit may be either portable above-ground tanks commonly made of steel (which is preferred) or stationary in-ground pits as depicted in Attachment A. The above-ground tanks have a major advantage over the in-ground pits because the above-ground tanks isolate the natural soils from the

contaminated fluids within the drilling system. These tanks are also portable and can usually be cleaned easily.

As the well is drilled, the cuttings that accumulate in the settling section must be removed. This is best done by shoveling them into drums or other similar containers. When the drilling is complete, the contents of the above-ground tank are likewise shoveled or pumped into drums, and the tank is cleaned and made available for its next use.

If in-ground pits are used, they should not extend into the natural water table. They should also be lined with a bentonite-cement mixture followed by a layer of flexible impermeable material such as plastic sheeting. Of course, to maintain its impermeable seal, the lining material used would have to be nonreactive with the wastes. An advantage of the in-ground pits is that well cuttings do not necessarily have to be removed periodically during drilling because the pit can be made deep enough to contain them. Depending on site conditions, the in-ground pit may have to be totally excavated and refilled with uncontaminated natural soils when the drilling operation is complete.

When the above-ground tank or the in-ground pit is used, a reserve tank or pit should be located at the site as a backup system for leaks, spills, and overflows. In either case, surface drainage should be such that any excess fluid could be controlled within the immediate area of the drill site.

The containment procedure for well-development fluids is similar to that for drilling muds. The volume and weight of contaminated fluid will be determined by the method used for development. When a new well is pumped or bailed to produce clear water, substantially less volume and weight of fluid result than when backwashing or high-velocity jetting is used.

5.5.4 Spill-Contaminated Materials

A spill is always possible when containers of liquids are opened or moved. Contaminated sorbents and soils resulting from spills must be contained. Small quantities of spill-contaminated materials are usually best contained in drums, while larger quantities can be placed in lined pits or in other impermeable structures. In some cases, onsite containment may not be feasible and immediate transport to an approved disposal site will be required.

5.6 Disposal of Contaminated Materials

Actual disposal techniques for contaminated materials are the same as those for any hazardous substance, that is, incineration, landfilling, treatment, and so on. The problem centers around the assignment of responsibility for disposal. The responsibility must be determined and agreed upon by all involved parties before the field work starts. If the site owner or manager was involved in activities that precipitated the investigation, it seems reasonable to encourage his acceptance of the disposal obligation. In instances where a responsible party cannot be identified, this responsibility may fall on the public agency or private organization investigating the site.

Another consideration in selecting disposal methods for contaminated materials is whether the disposal can be incorporated into subsequent site cleanup activities. For example, if construction of a suitable onsite disposal structure is expected, contaminated materials generated during the investigation should be stored at the site for disposal with other site materials. In this case, the initial containment structures should be evaluated for use as long-term storage structures. Also, other site conditions such as drainage control, security, and soil type must be considered so that proper storage is provided. If onsite storage is expected, then the containment structures should be specifically designed for that purpose.

6.0 REFERENCES

Brown & Root Environmental: Standard Operating Procedure No. 4.33, Control of Contaminated Material.

ATTACHMENT A

TWO TYPES OF MUD PITS USED IN WELL DRILLING

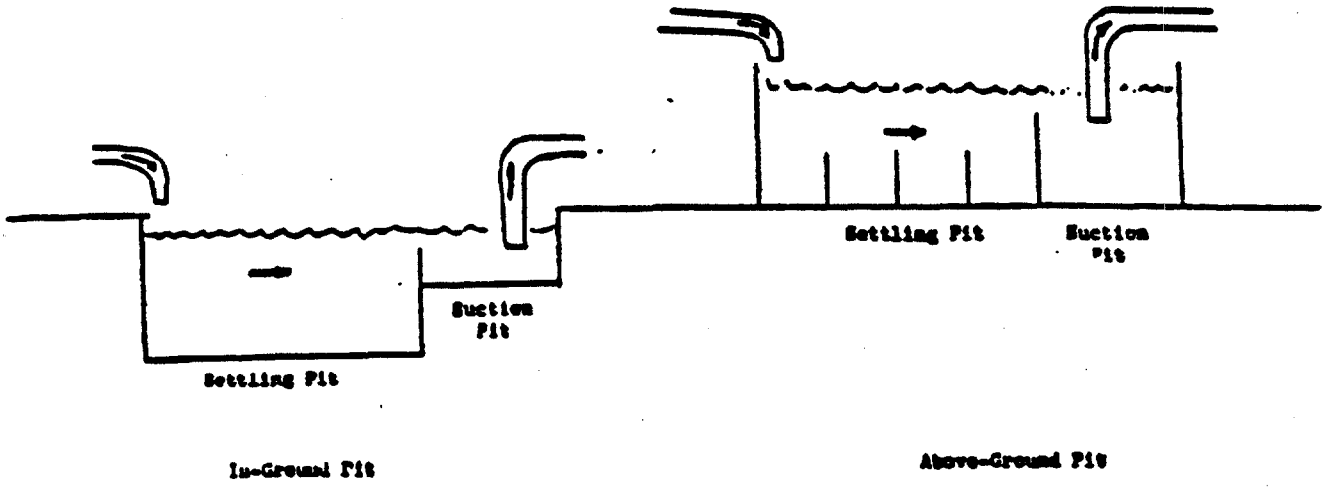

TABLE OF CONTENTS

SECTION		PAGE
1.0	PURPOSE	3
2.0	SCOPE	3
3.0	GLOSSARY	3
4.0	RESPONSIBILITIES	3
5.0	PROCEDURES	4
5.1	Principle of Operation	4
5.1.1	Displays	4
5.1.2	Keys	5
5.2	Default Display	6
5.3	Monitoring	6
5.3.1	Instrument Status	6
5.3.2	Alarms	6
5.4	STEL, TWA, MAX, and PEAK Operation	7
5.4.1	Short-term Exposure Limit (STEL) Mode	7
5.4.2	Time-weighted Average (TWA) Mode	7
5.4.3	MAX Mode	7
5.4.4	PEAK Mode	8
5.5	Set Functions	8
5.5.1	Pump	8
5.5.2	Clock	8
5.5.3	Calibration (Cal)	9
5.5.4	Library (Lib)	9
5.6	Preparing for Field Operation of the Photovac 2020	9
5.7	Maintenance and Calibration Schedule	10
5.7.1	Cleaning the UV Light Source Window	12
5.7.2	Cleaning the Ionization Chamber	12
5.8	Instrument Advantages	12
5.9	Limitations of the Photovac 2020 Photoionization Monitor	12
5.9.1	Variables Affecting Monitoring Data	13
6.0	TROUBLESHOOTING	13
6.1	Fault Messages	13
6.2	Specific Problems	15

TABLE OF CONTENTS

SECTION **PAGE**

7.0 SHIPPING **20**

8.0 REFERENCES **20**

FIGURES

NUMBER **PAGE**

5-1 DOCUMENTATION OF FIELD CALIBRATION 11
7-1 EXAMPLE OF A HAZARDOUS AIRBILL FOR ISOBUTYLENE 21

1.0 PURPOSE

To establish procedures for the use, maintenance, and calibration of the Photovac 2020 Photoionization Air Monitor.

2.0 SCOPE

Applies to each usage of the Photovac 2020 Photoionization Air Monitor by Brown & Root Environmental personnel.

3.0 GLOSSARY

Electron volt (eV) - A unit of energy equal to the energy acquired by an electron when it passes through a potential difference of 1 volt in a vacuum. It is equal to $1.602192 \pm 0.000007 \times 10^{-19}$ volts.

Intrinsically Safe (I.S.) - Based on wiring, configuration, design, operation, gasketing, construction, this instrument may be employed within locations in which flammable gases and/or vapors may exist.

Ionization Potential (I.P.) - The energy required to remove an electron from a molecule yielding a positively charged ion and a negatively charged free electron. The instrument measures this energy level.

Photoionization Detector (PID) - Photoionization detector employed as general reference to air monitors of this type. PIDs detection method employs ultraviolet (UV) radiation as an energy source. As air and contaminant are drawn through the ionization chamber the UV light source causes the contaminant with ionization potentials equal to or less than the UV source to break into positive and negatively charge ions. The created ions are subjected to an electrostatic field. The voltage difference is measured in proportion to the calibration reference and the concentration of the contaminant.

Ultraviolet Radiation (UV) - Ultraviolet radiation is the energy source employed by the instrument to ionize collected sample gas streams. The UV lamp source is required to be equal to or greater than the ionization potential of the substance drawn through the instrument in order to create separate ionized species.

4.0 RESPONSIBILITIES

Health and Safety Manager (HSM) - The HSM shall ensure that the user has been appropriately trained and certified in the usage of the Photovac 2020 instrument.

Equipment Manager - The Equipment Manager shall ensure all air monitoring instrumentation slated for field activities has been operationally checked out, fully charged, and calibrated prior to issuing any instrument for field service. Maintenance deficiencies identified by the Equipment Manager will require those instruments to be pulled from service until repairs can be facilitated.

Field Operations Leader (FOL)/Field Team Leader (FTL) - The FOL/FTL shall ensure all field team members employing the monitoring instruments as part of their assigned duties are adequately trained in the operation and limitations of this instrument. The FOL/FTL shall ensure that the air monitoring instruments are employed as directed by site guidance documents (i.e., Work Plan, Health and Safety Plan, etc.). Additionally, the FOL/FTL shall ensure that the appropriate documentation and recordkeeping requirements are fulfilled including Documentation of Calibration and Direct Reading Instrument Response Data Sheets for air monitoring activities.

Health and Safety Officer (HSO) - The HSO is responsible for determining air monitoring requirements for the site activities, and providing direction for air monitoring during specific site activities. This identification of types of air monitoring and direction for use are indicated within the Site-Specific Health and Safety Plan (HASP).

Site Safety Officer (SSO) - The SSO shall ensure the instruments identified are employed in the manner directed by the HSO, and that any action levels specified are observed for the application of engineering controls, personal protective equipment (PPE) use, and administrative controls. Additionally, he/she shall ensure the instruments are properly maintained and calibrated prior to use in the field. The SSO, during specific air monitoring applications including STEL and TWA mode measurements, will be responsible for the operation and application of this specialty air monitoring device.

5.0 PROCEDURES

5.1 Principle of Operation

The Photovac portable photoionizer detects the concentration of many organic (and a few inorganic). The basis for detection of this instrument is the ionization of components of captured gaseous streams. The incoming gas molecules are subjected to ultraviolet (UV) radiation, which is energetic enough to ionize many gaseous compounds. Molecules are transformed into charged-ion pairs, creating a current between two electrodes. Each molecule has a characteristic ionization potential, which is the energy required to remove an electron from the molecule, yielding a positively-charged ion and the free electron. The instrument measures this energy level.

This instrument measures the concentration of airborne photoionizable gases and vapors and automatically displays and records these concentrations. It does not distinguish between individual substances. Readings displayed represent the total concentration of all photoionizable chemicals present in the sample. This instrument is factory set to display concentration in units of ppm or mg/m^3.

The 2020 instrument is easy to operate. The meter display updates itself once per second. Concentrations are directly displayed on the readout.

2020 also performs short-term exposure limit (STEL), time-weighted average (TWA) and PEAK calculations. You can view any of these results, but only one mode may be viewed at a time.

2020 has 6 keys for alphanumeric entry and for accessing multiple functions. The keys are used to set up and calibrate 2020. They allow you to manipulate the concentration data in various ways.

All information entered with the keys and stored in 2020's memory is retained when the instrument is switched off. The clock and calendar continue to operate and do not need to be set each time 2020 is turned on.

5.1.1 Displays

The 2020 has a meter display for reporting detected concentration, and a display used to display status information and guide you through configuration options. All functions of the 2020 will be controlled or reported using one of these displays.

5.1.1.1 Meter Display

The meter display is a 4-digit display. It will always be used for reporting detected concentration. When the detector and pump are off, the meter display will be blank.

In order to accommodate the range of concentrations 2020 can detect, the meter reading will be reported using one of 2 resolutions. A resolution of 0.1 will be used for concentrations below 100 ppm, and a resolution of 1 will be used for concentrations above 100 ppm.

5.1.1.2 Status Display

The status display is a 2 line by 16 character display. The top line is used to display status information and prompts you for information. The bottom line is used for soft key names. Up to 3 names can be displayed for the 3 soft keys. If a name does not appear for a soft key, then the soft key has no associated function.

5.1.2 Keys

5.1.2.1 Fixed Keys

The three round keys below the soft keys each have a fixed function. The first key is the ON/OFF key, the middle key is the EXIT key, and the last key is the ENTER key.

The ON/OFF key is used to both turn power on to the 2020 as well as turn the power off. To turn on 2020, press the ON/OFF key. To turn the power off, press the ON/OFF key and hold it down for 2 seconds, and then release it. This is done to prevent accidental power off.

The EXIT key provides a way of returning to the default display. In the functional map, the soft keys allow you to advance and the EXIT key provides a way to go back. If you are at the initial entry of the menu, EXIT will return you to the default display.

The ENTER key has a context sensitive function. When you are operating or navigating through the function map, the ENTER key is used to exit the functions and return you to the default display. When entering data such as a name, number, date, or time, ENTER is used to confirm the entry.

5.1.2.2 Soft Keys

The three soft keys on 2020 are located directly below the status display. Each key has varying functions for configuring 2020, editing the data logger, and controlling the display. Since only three soft keys are available, each function is broken down into a path.

5.1.2.3 Entering Text With the Soft Keys

For all information that you must enter, the left, center, and right soft keys correspond to the up, down, and right arrow.

The up and down arrows are used to change the character highlighted by the cursor. The right arrow is used to advance the cursor to the next character on the right. When the cursor is advanced past the right most character, it wraps around to the first character again. To accept the changes, press the ENTER key. To ignore the change, press EXIT.

Formatting characters, such as the colon (:) in the time, the decimal (.) in a concentration, and the slash (/) in the date are skipped when advancing the cursor.

All inputs are an 8 character input, which is displayed on the right side of the top line of the status display. The prompt, describing the input, occupies the left half of the top line. The soft keys are defined on the bottom line of the status display.

5.2 Default Display

The meter display shows the detected concentration. The resolution of the display changes with the magnitude of the reading. A reading of 0 to 99.9 will be displayed with a resolution of 0.1 ppm or mg/m^3. A reading greater than 99.9 will be shown with a resolution of 1 ppm or mg/m^3. The meter will display concentrations up to 2000 ppm or 2(XX) mg/m^3.

The status display is used to display the instrument status, date, time, units, and active soft keys.

The default display provides the following information: instrument status, current detected concentration, time, date, and measurement units. The status display toggles between showing time and units and then the date.

When the display mode is MAX, the date and time correspond to the date and time the MAX concentration was recorded. In TWA mode, the time represents the number of hours and minutes during which the TWA has been accumulating. For PEAK and STEL monitoring, the date and time correspond to the current date and time.

5.3 Monitoring

5.3.1 Instrument Status

The instrument status is shown on the left of the first line of the status display and on the Table and Graph outputs. Each status has a priority assigned to it. If more than one status is in effect, then the status with the highest priority is displayed until the condition is corrected or until the option is turned off.

5.3.2 Alarms

While operating the instrument, any one of three alarm conditions can occur. To accurately identify the source of the alarm, each type of alarm has been given a unique status.

In addition to the status, 2020 also has an audible alarm and a visual alarm LED. To conserve power, the 2020 alternates between these two alarm indicators, rather than operating both concurrently. Different alarms are identified by the frequency at which the 2020 alternates as follows: PEAK alarm-5 times per second; STEL alarm-2.5 times per second; and TWA alarm-1.25 times per second.

The left soft key is used for acknowledging alarms, and is named "Ack." If no alarm exists, then the "Ack" key is not shown. To clear the alarm, press the "Ack" key. Once acknowledged, the alarm indicators are cleared. The alarm status will remain until the alarm condition clears.

2020 updates the peak concentration once every second. Following every update, the peak concentration is compared to the peak alarm level, and if exceeded, an alarm is triggered.

If 15 minute average exceeds the selected STEL, a STEL alarm is generated.

The TWA alarm is generated when the current average of concentration, since the TWA was last cleared, has exceeded the TWA exposure limit.

During calibration, all alarms are disabled. Once the calibration is complete the alarms are re-enabled.

5.4 STEL, TWA, MAX, and PEAK Operation

The 2020's meter display can be configured to show one of four values: STEL, TWA, PEAK, and MAX.

5.4.1 Short-term Exposure Limit (STEL) Mode

The Short-term Exposure Limit (STEL) mode displays the concentration as a 15 minute moving average. 2020 maintains 15 samples, each representing a one-minute averaging interval.

Once every minute, the oldest of the 15 samples is replaced with a new one minute average. This moving average provides a 15-minute average of the last 15 minutes with a one-minute update rate. Since the average is calculated using 15 one-minute averages, the meter display will only update once every minute.

STEL is set to zero each time the instrument is turned on. Since STEL is a 15-minute moving average, there is no need to clear or reset the STEL.

STEL calculations are always being performed by 2020. You can display the results of the calculations by selecting STEL as the Display mode.

5.4.2 Time-weighted Average (TWA) Mode

The TWA accumulator sums concentrations every second until 8 hours of data have been combined. If this value exceeds the TWA alarm setting, a TWA alarm is generated. The TWA is not calculated using a moving average. Once 8 hours of data have been summed, the accumulation stops. In order to reset the TWA accumulator, press the "Clr" key.

This sum will only be complete after 8 hours, so the meter displays the current sum divided by 8 hours. While you are in TWA mode, the time on the status display will show the number of minutes and hours of data that TWA has accumulated. When this reaches 8 hours 2020 stops accumulating data and the TWA is complete.

TWA calculations are always being performed by 2020. You can display the results of the calculations by selecting TWA as the Display mode.

5.4.3 MAX Mode

The MAX mode displays the maximum signal, with the date and time that it was recorded. 2020 continues to log data according to the selected averaging interval, but only the maximum detected concentration is displayed on the meter display.

The right soft key is used to clear the meter when displaying MAX. The "Clr" key only affects the reading that the meter is displaying. For example, if you display the MAX reading, and you press "Clr," only the MAX value is cleared. The TWA is still accumulating in the background.

5.4.4 PEAK Mode

The PEAK mode displays the current detected concentration. The reading is updated once a second. In the background, the 2020 data logger is sampling the concentration and measuring minimum, maximum, and average concentrations for the selected averaging interval. At the end of every interval, one entry is placed in the data logger until the data logger is full. Typical application concerning the use of this instrument is operated in this mode. Operation within the other specialized modes are the responsibility of the SSO.

5.5 Set Functions

Set functions are used to setup 2020. There are three functions which can be set on the 2020: Calibration, Pump and Clock.

5.5.1 Pump

The Pump function is used to control the pump. After selecting Set Pump, 2020 responds by displaying the new pump status.

The detector is also turned off when you turn the pump off. This prevents the detector from being damaged when there is no sample flowing through the detector.

When the pump and the detector are off, the meter display will be blank. Turn the pump and detector off when concentration measurements are not necessary, and 2020 will only be used for reviewing data or generating reports. By operating the instrument with the pump and detector off when you do not need them, you will conserve the lives of the battery and ultraviolet (UV) lamp.

1. Press the ENTER key. The top line of the status display changes to "Select?". The bottom line displays 3 soft key names: "Set," "Log," and "Disp."

2. Press the soft key below "Set."

3. The names of the soft keys change to reflect the Set options. The display now shows 3 devices which can be set: "Clock," "Pump," and "Cal." Press the "Pump" key.

4. The 2020 turns the pump off. If the pump was off, pressing "Pump" will turn the pump on.

5. A message will be displayed to show you the status of the pump. 2020 reverts back to the previous menu after a few seconds.

6. To return to the default display, press the ENTER key.

5.5.2 Clock

The Clock function is used to set both the current date and time.

1. Press the ENTER key.

2. Press the "Set" key.

3. When the names of the soft keys change, press the "Clock" key.

The up and down arrows are used to change the character underlined by the cursor. The right arrow is used to advance the cursor to the next character on the right. When the cursor is advanced past the right-most character, it wraps around to the first character again.

Formatting characters, such as the colon (:) in the time and the slash (/) in the date are skipped when advancing the cursor.

4. Use the "arrow keys" to enter the correct time. The time is formatted as Hour:Minute:Second.

5. Press the ENTER key to confirm the time and move to the date option.

6. When setting the date, the 2020 prompts you for the current date formatted as Year/Month/Day. Use the "arrow keys" to enter the correct date.

7. Press the ENTER key to confirm the date and return to the Set options. You can wait for the display to timeout or press ENTER to return to the default display.

5.5.3 Calibration (Cal)

Cal allows you to setup and calibrate 2020. You have three options under the Cal function: "Zero," Span," and "Mem."

A calibration memory consists of a name, a response factor, and PEAK, TWA, and STEL alarm levels.

The "Zero" and "Span" keys are covered in detail in the manufacturer's operations manual for the instrument.

To edit the calibration memory, select "Mem" and then "Chng." The 2020 prompts you with two new soft keys: "User" and "Lib."

5.5.4 Library (Lib)

Library selections simplify Cal Memory programming, and provide standard response factors for approximately 70 applications. "Lib" allows you to select an entry from a pre-programmed library. The name, response factor, and three alarm levels are all set from the library. To select a library entry to program the selected Cal Memory:

1. Select "Set," "Cal," "Mem," "Chng," and "Lib."

2. Use the "Next" and "Prev" keys to scroll through the list. See the manufacturer's manual Appendix 8.7 for a list of the library entries.

5.6 Preparing for Field Operation of the Photovac 2020

Turning 2020 On

1. Turn 2020 on by pressing the ON/OFF key.

2. 2020 will display the software version number. Wait for the 2020 to proceed to the default display.

3. Allow 10 minutes for the instrument to warm up and stabilize.

4. Press the Enter Key. The default display will provide 3 soft key selection "Set," "Log," and "Display."

5. Press "Set." From this option 3 other soft key selections will be offered: "Pump," "Clock," and "Cal."

6. Press "Cal." This will begin the calibration sequence. The first selection is to Zero the instrument.

7. Press Enter, zeroing will begin. (Note: When employing zero gas attach and activate zero gas supply at this time.)

8. The next selection offered will be Span. Press Enter at which time the concentration will be requested. The isobutylene calibration gas employed under general service will be marked on the side of the container. Use the soft keys to toggle into position and to log the concentration. Once the concentration is logged press "Enter." The direction or status display will indicate spanning. At this time hook up the span gas with a regulator to the Photovac 2020, and open it to supply enough flow to elevate the flow rate indicator to the green indicator line (1/8" from the rest position).

9. Once spanning is complete, the alarms which have been disabled during calibration will activate indicating that calibration is complete.

10. Document this calibration procedure using a Document of Calibration form as illustrated in Figure 5-1.

This instrument is ready for general purpose application.

Calibration is to be performed daily or prior to each use in accordance with Section 5.6 of this SOP.

5.7 Maintenance and Calibration Schedule

Function	Frequency
Routine Calibration	Prior to each use
Factory Inspection and Calibration	Once a year, or when malfunctioning
Wipe Down the Outer Casing of the Unit	After each use
Clean UV Light Source	Every 24 hours of operation
Sample Inlet Filter	Change on a weekly basis or as required by level of use
Battery charging	After each use
Clean ionization chamber	Monthly

FIGURE 5-1

DOCUMENTATION OF FIELD CALIBRATION

SITE NAME: _____ PROJECT NO.: _____

Date of Calibration	Instrument Name and Model	B & R Environmental Instrument I.D. Number	Person Performing Calibration	Instrument Settings/Readings		Calibration Standard (Lot Number)	Remarks/ Comments
				Pre-Calibration Setting	Post-Calibration Reading		

5.7.1 Cleaning the UV Light Source Window

1. Turn the FUNCTION switch to the OFF position. Use 2020 multi-tool and remove lamp housing cover.

2. Tilt the lamp housing with one hand over the opening, slide the lamp out of the housing.

3. The lamp window may now be cleaned with any of the following compounds using lens paper:

   a. 11.7 eV Lamp - Dry Aluminum Oxide Powder (3.0 micron powder)
   b. HPLC Grade Methanol - All other lamps

4. Following cleaning, reassemble by first sliding the lamp back into the lamp housing. Replace o-ring as necessary, reinstall lamp housing cover, tighten using 2020 multi-tool. (Do not over tighten).

5. Recalibrate as per Section 5.6.

5.7.2 Cleaning the Ionization Chamber

1. Turn the FUNCTION switch to the OFF position and remove the lamp housing cover and lamp as per Section 5.7.1.

2. Using a gentle jet of compressed air, gently blow out any dust or dirt.

3. Following cleaning, reassemble by first sliding the lamp back into the lamp housing. Replace o-ring as necessary, reinstall lamp housing cover, tighten using 2020 multi-tool. (Do not over tighten).

4. Recalibrate as per Section 5.6.

5.8 Instrument Advantages

The Photovac 2020 is easy to use in comparison to many other types of monitoring instrumentation. Its detection limit range is in the low parts-per-million range. Response time rapidly reaches 90 percent scale of the indicated concentration (less than 3 seconds for benzene). This instrument's automated performance covers multiple monitoring functions simultaneously, incorporating data logging capabilities.

5.9 Limitations of the Photovac 2020 Photoionization Monitor

- Since the 2020 is a nonspecific total gas/vapor detector, it cannot be used to identify unknown chemicals; it can only quantitate them in relationship to a calibration standard (relative response ratio).

- For appropriate application of the 2020, ionization potentials of suspected contaminants must be known.

- Because the types of compounds that the 2020 can potentially detect are only a fraction of the chemicals possibly present at a hazardous waste site or incident, a background or zero reading on this instrument does not necessarily signify the absence of air contaminants.

- The 2020 instrument can monitor only certain vapors and gases in air. Many nonvolatile liquids, toxic solids, particulates, and other toxic gases and vapors cannot be detected.

- PID's are generally not specific. Their response to different compounds is relative to the calibration gas used. This is referred to as relative response ratio. Instrument readings may be higher or lower than the true concentration. This can be an especially serious problem when monitoring for total contaminant concentrations if several different compounds are being detected at once.

- The 2020 is a small, portable instrument which cannot be expected to yield results as accurately as laboratory instruments.

5.9.1 Variables Affecting Monitoring Data

Monitoring hazardous waste site environment can pose a significant challenge in assessing airborne concentrations and the potential threats to site personnel. Several variables may influence both dispersion and the instrument's ability to detect actual concentrations. Some of the variables which may impact these conditions are as follows:

- Temperature - changes in temperature or pressure will influence volatization, and effect airborne concentrations. Additionally, an increase or decrease in temperature ranges may have an adverse effect on the instrument's ability to detect airborne concentrations.

- Humidity - excessive levels of humidity may interfere with the accuracy of monitoring results.

- Rainfall - through increased barometric pressure and water may influence dispersion pathways effecting airborne emissions.

- Electromagnetic interference - high voltage sources, generators, other electrical equipment may interfere with the operation and accuracy of direct-reading monitoring instruments.

6.0 TROUBLESHOOTING

6.1 Fault Messages

When the "Fault" status is displayed, 2020's operation is comprised.

Fault 1: Signal from zero gas is too high.

Cause: If another fault occurred while 2020 was setting its zero point, then this fault is displayed.

Action: Ensure no faults are occurring and calibrate 2020 again.

Cause: Contamination of sample line, sample line, sample probe or fittings before the detector.

Action: Clean or replace the sample line, sample probe or the inlet filter.

Cause: Span gas and zero air are mixed up.

Action: Ensure clean air is used to zero 2020. If you are using gas bags, mark the calibration and zero gas bags clearly.

Cause: Ambient air is contaminated.

Action: If you are unsure about the quality of ambient air, use a supply of commercial zero grade air to zero 2020.

Fault 2: Signal from span gas is too small.

Cause: Operator may have confused the span gas and zero air.

Action: Ensure clean air is used to zero 2020. If you are using gas bags, mark the calibration and zero gas bags clearly.

Action: Ensure the span gas is of a reliable concentration.

Cause: UV lamp window is dirty.

Note: Do not remove the detector lamp in a hazardous location.

Action: Clean the UV lamp window.

Cause: UV lamp is failing.

Note: Do not remove or replace the detector lamp in a hazardous location.

Action: Install a new UV lamp.

Cause: Incompatible application.

Action: The concentration and sample gas are incompatible for use with 2020.

Fault 3: UV lamp fault. UV lamp has not started.

Cause: UV lamp has not started immediately.

Action: This fault may be seen momentarily when 2020 is first turned on. Allow 30 to 60 seconds for the UV lamp to start and the fault to clear.

Cause: UV lamp serial number label is blocking the photocell.

Note: Do not remove or replace the detector lamp in a hazardous location.

Action: If you have a UV lamp with a white serial number label, it is possible that the label is blocking the photocell. Rotate the lamp approximately 90 degree and then try to start 2020 again. If the fault persists, replace the lamp.

Cause: UV lamp not installed.

Note: Do not remove or replace the detector lamp in a hazardous location.

Action: Install a UV lamp.

Cause: UV lamp has failed.

Note: Do not remove or replace the detector lamp in a hazardous location.

Action: Install a new UV lamp.

Cause: Electronic problem.

Action: If a new UV lamp still generates this fault, then contact the Photovac Service Department.

Fault 4: Pump current too low or too high.

Cause: If the pump sounds labored, then the pump is operating beyond normal operating parameters.

Action: Check for an obstruction in the sample line. Make sure sample line, sample probe or inlet filter are not plugged.

Note: Do not replace the inlet filter in a hazardous location.

Action: Replace the inlet filter.

Action: Ensure the sample outlet, located on the underside of 2020, is not obstructed.

Cause: UV lamp is too wide, causing flow to be restricted.

Note: Do not remove or replace the detector lamp in a hazardous location.

Action: If you have a UV lamp with a white serial number label, it is possible that the lamp is too wide for the lampholder. Contact the Equipment Manager.

Cause: 2020 has been exposed to a solvent that can pass through the inlet filter and liquid has been aspirated.

Action: Contact the Equipment Manager.

Cause: The pump has failed.

Action: Contact the Equipment Manager.

6.2 Specific Problems

Problem: Very low or no instrument response detected, yet compounds are known to be present.

Cause: 2020 has not been calibrated properly.

Action: Ensure the calibration gas is of a reliable concentration and then calibrate the instrument as outlined in Section 3.2 or 3.3 of the User's Manual.

After the instrument has been calibrated, sample the bag of calibration gas. A reading equivalent to the calibration gas should be displayed. If not, contact the Equipment Manager.

Note: Do not remove or recharge the battery pack in a hazardous location.

Action: Disconnect the battery charger before calibrating 2020.

Cause: Calibration Memories have not been programmed correctly.

Action: Program all the calibration memories you require for your application. You must use the correct calibration gas and concentration for each Cal Memory.

Cause: Response factor has been set to zero.

Action: Enter the correct response factor. Refer to Appendix 8.6 for a list of response factors. If the compound is not listed in Appendix 8.6 or you are measuring gas mixtures, then enter a value of 1.0. See User's Manual.

Cause: You are not using the correct Cal Memory.

Action: Select the correct Cal Memory for your application.

Note: It does not matter which Cal Memory is selected or which response factor is entered. 2020's response is not specific to any one compound. The reading displayed represents the total concentration of all ionizable compounds in the sample.

Cause: Detector is leaking. A decrease in sensitivity may be due to a leak in the detector.

Note: Do not remove or replace the detection lamp in a hazardous location.

Action: Ensure the UV lamp has been installed correctly.

Action: Ensure the lamp cover has been tightened down. Do not overtighten the cover.

Action: Ensure the o-ring seal on the lamp cover is positioned correctly.

Cause: UV lamp is too long, causing flow to be restricted.

Note: Do not remove or replace the detector lamp in a hazardous location.

Action: If you have a UV lamp with a white serial number label, it is possible that the lamp is too long for the lampholder. Replace the lamp and contact the Equipment Manager.

Cause: UV lamp is too wide, causing flow to be restricted.

Note: Do not remove or replace the detector lamp in a hazardous location.

Action: If you have a UV lamp with a white serial number label, it is possible that the lamp is too wide for the lampholder. Contact the Equipment Manager.

Cause: Sampling environment is extremely humid.

Action: Water vapor is not ionized by the PID, but it does scatter and absorb the light and results in a lower reading.

The 2020 detector has been designed to operate under high humidity conditions. Under extreme conditions you may notice decreased response due to humidity.

Cause: UV lamp is failing.

Note: Do not remove or replace the detector lamp in a hazardous location.

Cause: High concentration of non-ionizable compounds.

Action: Chemical compounds, such as methane, with IPs greater than the 10.6 eV scatter and absorb the UV light. Sensitivity may be decreased significantly.

Application with high backgrounds of such materials, may be incompatible with 2020. Contact the Photovac Applications Group for more information.

Problem: Erroneously high readings.

Cause: Sampling environment is extremely humid.

Action: Water vapor may contain mineral salts which carry a charge. The water vapor becomes an electrolytic solution which becomes ionized when it enters the detector.

Atmospheric water in areas around the sea or stagnant water may produce a response in the absence of contaminants. The same effect may be seen when conducting ground water investigations in areas where the water is hard because it contains a significant concentration of minerals.

Cause: 2020 has not been calibrated properly.

Action: Ensure the calibration gas is of a reliable concentration and then calibrate the instrument as outlined in Section 5.6.

After the instrument has been calibrated, sample the bag of calibration gas. A reading equivalent to the calibration gas should be displayed. If not contact the Equipment Manager.

Cause: Cal Memories have not been programmed correctly.

Action: Program all the Cal Memories you require for your application. You must use the correct calibration gas and concentration for each Cal Memory. See Section 3.4, of the User's Manual.

Cause: You are not using the correct Cal Memory.

Action: Select the correct Cal Memory for your application. See Section 3.2.2 or 3.3.2, of the User's Manual.

Note: It does not matter which Cal Memory is selected or which response factor is entered. 2020's response is not specific to any one compound. The reading displayed represents the total concentration of all ionizable compounds in the sample.

Cause: Detector has been short circuited by foreign matter in the detector cell.

Note: Do not service 2020 in a hazardous location.

Action: Do not touch the wire grid inside the detector cell. Use a gentle jet of compressed air to remove any dust in the detector cell.

Warning: Do not insert any object, other than the UV lamp, into the lampholder.

Cause: There is an undetermined problem.

Action: Contact the Equipment Manager.

Problem: Date and time settings are not retained.

Cause: The battery pack has been removed before 2020 was turned off.

Note: Do not remove or recharge the battery pack in a hazardous location.

Action: Replace the battery pack and reset the time and date. Ensure 2020 has been turned off before removing the battery pack.

Cause: 2020 has not been used for 3 months or more and the internal battery (not the external battery pack) has discharged.

Note: Do not remove or recharge the battery pack in a hazardous location.

Action: Connect 2020 to the AC adapter and turn 2020 on. Turn the pump off. While 2020 is running the internal battery is charging. Leave the instrument running for approximately 24 hours.

Problem: Instrument status shows "Over."

Cause: High concentrations of gases and vapors will cause a rapid change in signal level. The detector and associated electronics may become temporarily saturated.

Action: Wait a few seconds for the status to return to normal. PIDs are designed to detect relatively low concentrations of gases and vapors. Exposure to very high concentrations may result in a very high or maximum response.

Cause: The detector has become saturated.

Action: Move 2020 to a location where it can sample clean air. Sample clean air until the reading stabilizes around 0.

Cause: Detector has been short circuited by foreign matter in the detector cell.

Note: Do not service 2020 in a hazardous location.

Action: Do not touch the wire grid inside the detector cell. Use a gentle jet of compressed air to remove any dust or dirt in the detector cell.

Warning: Do not insert any object, other than the UV lamp, into the lampholder.

Cause: There is an undetermined problem.

Action: Contact the Equipment Manager.

Problem: Display is blank.

Cause: Battery pack is critically low.

Note: Do not remove or recharge the battery pack in a hazardous location.

Action: Replace the battery pack or connect 2020 to the AC adapter.

Cause: The battery pack is not connected to the instrument correctly.

Action: Ensure the battery pack connector is securely attached to the connector on 2020.

Cause: There is an undetermined problem.

Action: Reset 2020. You must leave the instrument on while you disconnect the battery pack. This will reset the instrument. Reconnect the battery pack and close the battery hatch. Turn on 2020, set the time and date and program all the calibration memories that you are using.

Action: Contact the Equipment Manager.

Problem: Sample flow rate is less than 300 ml/min.

Cause: Inlet filter is plugged.

Note: Do not replace the inlet filter in a hazardous location.

Action: Replace inlet filter.

Cause: Inlet filter has not been installed properly.

Action: Ensure that the inlet filter has been installed correctly.

Cause: UV lamp is too long, causing flow to be restricted.

Note: Do not remove or replace the detector lamp in a hazardous location.

Action: If you have a UV lamp with a white serial number label, it is possible that the lamp is too long for the lampholder. Replace the lamp and contact the Equipment Manager.

Cause: UV lamp is too wide, causing flow to be restricted.

Action: If you have a UV lamp with a white serial number label, it is possible that the lamp is too wide for the lampholder. Contact the Equipment Manager.

Cause: 2020 has been exposed to a solvent that can pass through the inlet filter and liquid has been aspirated.

Action: Contact the Equipment Manager.

Cause: Sample outlet is obstructed.

Action: Ensure the sample outlet is? not obstructed in any way.

Cause: Pump has been damaged.

Action: Contact the Equipment Manager.

Problem: Liquid has been aspirated.

Cause: 2020 has been exposed to a solvent that can pass through the inlet filter.

Action: Contact the Equipment Manager.

Problem: Corrosive gases and vapors have been sampled.

Cause: 2020 has been exposed to corrosive gases and vapors.

Action: Corrosive gases and vapors can affect the electrodes within the detector as well as the lamp window. Prolonged exposure to corrosive materials may result in permanent fogging or etching of the window. If 2020 is exposed to corrosive material, contact the Equipment Manager.

7.0 SHIPPING

The Photovac may be shipped as cargo or carried on as luggage providing there is no calibration gas cylinder accompanying the kit. When shipping or transporting the calibration gas, a Hazardous Airbill including the information as stipulated in Figure 7-1 will be entered.

8.0 REFERENCES

Photovac 2020 Photoionization Monitor User's Manual, 1995.

FIGURE 7-1

EXAMPLE OF A HAZARDOUS AIRBILL FOR ISOBUTYLENE

SHIPPER'S DECLARATION FOR DANGEROUS GOODS (Provide at least two copies to the airline)

Shipper BROWN & ROOT ENVIRONMENTAL
SPRING RUN ROAD EXTENSION
CORAOPOLIS, PA 15108

Air Waybill No.
Page of Pages
Shipper's Reference Number (optional)

Consignee

FedEx. Federal Express

Two completed and signed copies of this Declaration must be handed to the operator.

TRANSPORT DETAILS

This shipment is within the limitations prescribed for: (delete non-applicable)

PASSENGER AND CARGO AIRCRAFT	~~CARGO AIRCRAFT ONLY~~

Airport of Departure

Airport of Destination:

WARNING

Failure to comply in all respects with the applicable Dangerous Goods Regulations may be in breach of the applicable law, subject to legal penalties. This Declaration must not, in any circumstances, be completed and/or signed by a consolidator, a forwarder, or an IATA cargo agent.

Shipment type: (delete non-applicable)

NON-RADIOACTIVE	~~RADIOACTIVE~~

NATURE AND QUANTITY OF DANGEROUS GOODS

Dangerous Goods Identification							
Proper Shipping Name	Class or Division	UN or ID No.	Packing Group	Subsidiary Risk	Quantity and type of packaging	Packing Inst.	Authorization
COMPRESSED GAS N.O.S. (AIR, ISOBUTYLENE)	2.2	UN 1956			1 FIBER BOARD box x KG	200	

Additional Handling Information

Emergency Telephone Number (412) 262-4583

I hereby declare that the contents of this consignment are fully and accurately described above by the proper shipping name, and are classified, packaged, marked and labelled/placarded, and are in all respects in proper condition for transport according to applicable International and National Governmental Regulations.

Name/Title of Signatory
TOM PATTON _ EQUIPMENT MANAGER
Place and Date
PITTSBURGH, PA
Signature
(see warning above)

IF ACCEPTABLE FOR PASSENGER AIRCRAFT, THIS SHIPMENT CONTAINS RADIOACTIVE MATERIAL INTENDED FOR USE IN, OR INCIDENT TO, RESEARCH, MEDICAL DIAGNOSIS, OR TREATMENT.

FedEx M-1421 10/95 LOGOS® 2001730945