N60921.AR.000507
NSWC WHITE OAK
5090.3a

Section: 04.03
Site 20903-5640 (White Oak)
Doc. #: 0003

00537

TECHNICAL MEMORANDUM

CH2MHILL

Baseline Sampling Summary for Enhanced *In-situ* Bioremediation Pilot Study at Site 9, Operable Unit 1 Former NSWC White Oak

PREPARED FOR: Walter Legg/EFACHES

PREPARED BY: Scott MacEwen/CH2M HILL
Abigail Wren/CH2M HILL

COPIES: Bruce Beach/EPA Region III
Mark Callaghan/MDE
Bob Ridgway/GSA/Identix
Scott Nesbit/Tetra Tech NUS
Phil Tully/Shaw

DATE: October 7, 2003

Introduction

This memorandum is intended to provide the results from the monitoring well installation and baseline sampling events associated with the groundwater remediation pilot test at Site 9 at the former Naval Surface Warfare Center (NSWC) White Oak. The purpose of the pilot test is to evaluate the effectiveness of enhanced *in-situ* bioremediation to degrade explosives compounds and perchlorate in the groundwater at the site. The pilot test uses sodium lactate as a electron donor to promote biodegredation of the site contaminants. The memo also provides a brief summary of the initiation of the test which involved drilling injection borings, subsurface fracturing and the injection of sodium lactate. Ensuing memoranda will provide further analysis and discussion of future data collected as the test progresses.

Site Characterization and Monitoring System Installation

Ten new monitoring wells were installed in the pilot study target area at Site 9 (see Figure 1). Seven of the wells, 09GW205-09GW211, were installed between May 28th and May 30th of 2003 and sampled on June 3, 2003. These wells were installed in the area initially believed to be the source area of the explosives contamination. Results from this baseline sampling showed that, contrary to indications from previous groundwater sampling, the source area was likely upgradient of the originally defined study area. Direct push soil and groundwater samples were then taken on June 23, 2003 in two locations (09SB300 and 09SB301) near a floor sump within Building 318 which had historically been used to collect wastewater (see Figure 1). Three additional monitoring wells, 09GW212-09GW214, were then installed on June 26, 2003 to further define the source of contamination. This additional phase of sampling identified the former wastewater collection sump in Building 318 as the source of the groundwater contamination.

Groundwater monitoring wells were installed using a either air rotary, mud rotary or hollow stem auger depending on depth and type of construction required. The wells were constructed of 2 inch diameter PVC with a 5 or 10-foot screen interval. The screened interval (relative to the water table and site lithology) varied from well to well depending on the purpose of the well. Well construction specifications are shown in Table 1. The soil boring logs fo reach well are included in Appendix A and well completion diagrams are included in Appendix B.

TABLE 1
Pilot Study Monitoring Wells
Site 9, NSWC White Oak

Station ID	Installation Date	Aquifer Zone	Total Depth (ft bls)	Screen Interval (ft bls)
09GW205	05/29/03	Saprolite	25	15-25
09GW206	05/28/03	Saprolite	35	25-35
09GW207	05/30/03	Saprolite	25	20-25
09GW208	05/30/03	Saprolite	36	26-36
09GW209	05/29/03	Saprolite	24	14-24
09GW210	05/30/03	Bedrock	52	42-52
09GW211	05/28/03	Saprolite	35	30-35
09GW212	06/26/03	Saprolite	52	42-52
09GW213	06/26/03	Saprolite	27.5	17.5-27.5
09GW214	06/26/03	Saprolite	27.5	17.5-27.5

Well 09GW212 serves as the upgradient background well. The screen of well 09GW210 is cased (isolated) in the bedrock to help determine if the groundwater contamination extends into the bedrock near the source area. The other eight wells, in addition to existing well 09GW01, serve as monitoring points in the saprolite (decomposed rock above the competent bedrock) at varying distances and depths downgradient of the source area.

Baseline Sampling

Prior to lactate injection, baseline sampling was conducted. Each of the monitoring wells was sampled and analyzed for the target contaminants (TCE, RDX, perchlorate) and their breakdown products. Most of the wells were also analyzed for sodium lactate indicator parameters, and natural attenuation indicator parameters. Baseline sampling was conducted during two separate events as indicated above. Wells 09GW205-09GW211 were sampled on June 3, 2003, and were sampled for all of the parameters listed below:

Target contaminants:

- Nitroaromatics and nitroamines (includes RDX, HMX, and 2,4,6-TNT)
- TCL volatile organic compounds (includes TCE)
- Perchlorate

Sodium lactate indicators:

- Metabolic acids
- Sodium
- Hydrogen

Primary natural attenuation parameters and field parameters:

Organics:

- Total organic carbon
- Methane, ethane, ethene
- Carbon dioxide

Electron Acceptors:

- Dissolved Oxygen
- Nitrate
- Sulfate
- Chemical Oxygen Demand (COD)

General Water Chemistry:

- Temperature
- Alkalinity
- Chloride
- Iron (II)
- Sulfide
- pH
- Eh or ORP

Wells 09GW212-09GW214 were sampled on July 7, 2003, and were only sampled for the target contaminants and field parameters (pH, DO, ORP, temperature, conductivity). Additionally, direct push soil and groundwater samples were collected at borings 09SB300/09GW300 and 09SB301/09GW301 on June 23, 2003. These samples were analyzed for the target contaminants only.

The key results for the target contaminants are indicated in Figure 2. Appendix C shows concentrations of all detected parameters for the samples collected, and a complete data set including all analytical results may be found in Appendix D.

In addition to analytical sampling, water levels were measured. All water level data is included in the attached Table 2, and groundwater contours are depicted in Figure 3. Groundwater contours indicated groundwater flow in the southwesterly direction, which is consistent with previous findings at the site.

Table 2
Monitoring-Well Elevations and Water Levels
Pilot Study for Site 9 Groundwater
Former NSWC-White Oak, Silver Spring, Maryland

Well	Top of PVC Casing - measuring point (ft. above msl)	18-Nov-02		03-Jun-03		07-Jul-03		04-Aug-03		21-Aug-03	
		Depth to Water (ft. bmp)	Groundwater Elevation (ft. above msl)	Depth to Water (ft. bmp)	Groundwater Elevation (ft. above msl)	Depth to Water (ft. bmp)	Groundwater Elevation (ft. above msl)	Depth to Water (ft. bmp)	Groundwater Elevation (ft. above msl)	Depth to Water (ft. bmp)	Groundwater Elevation (ft. above msl)
09GW01	206.47	16.31	190.16	13.00	193.47	NR	NR	14.01	192.46	14.49	191.98
09GW202	217.5	dry	dry	22.38	195.12	NR	NR	23.41	194.09	NR	NR
09GW204	206.54	15.94	190.60	13.42	193.12	NR	NR	14.35	192.19	NR	NR
09GW205	207.38	NR	NR	13.5	193.88	NR	NR	14.66	192.72	15.11	192.27
09GW206	213.67	NR	NR	19.48	194.19	NR	NR	20.54	193.13	NR	NR
09GW207	209.05	NR	NR	14.33	194.72	NR	NR	15.3	193.75	NR	NR
09GW208	214.44	NR	NR	18.9	195.54	NR	NR	19.91	194.53	20.3	194.14
09GW209	214.44	NR	NR	19.37	195.07	NR	NR	20.32	194.12	20.77	193.67
09GW210	209.67	NR	NR	53.4	156.27	NR	NR	25.1	184.57	NR	NR
09GW211	217.79	NR	NR	23.37	194.42	NR	NR	24.41	193.38	NR	NR
09GW212	230.51	NR	NR	NR	NR	34.75	195.76	35.8	194.71	36.15	194.36
09GW213	215.9	NR	NR	NR	NR	20.40	195.50	21.50	194.40	21.89	194.01
09GW214	215.58	NR	NR	NR	NR	20.23	195.35	21.15	194.43	21.62	193.96
IW01	215.52	NR	NR	NR	NR	NR	NR	NR	NR	21.89	193.63
IW02	214.7	NR	NR	NR	NR	NR	NR	NR	NR	20.78	193.92
IW03	214.12	NR	NR	NR	NR	NR	NR	NR	NR	19.81	194.31
IW04	211.17	NR	NR	NR	NR	NR	NR	NR	NR	16.91	194.26
IW05	211.79	NR	NR	NR	NR	NR	NR	NR	NR	19.28	192.51

Notes:
bmp = below measuring point. Measuring point is north side of PVC casing.
msl = mean sea level
NI = Not installed, NR = Not Read

Fracturing and Injection Process

Injection Well Installation

The expected radius of distribution for sodium lactate in the treatment area, based on conversations with ARS Technologies, the subcontractor that performed the pneumatic fracturing and injection, was 20 to 40 feet. Based on this information, and in conjunction with groundwater flow data and source area concentrations, it was determined that five injection borings (09IW01-09IW05) would be placed at approximately 45 foot spacing in a five point configuration as indicated on Figure 1.

Injection wells were installed on July 16, 2003. The injection wells were constructed by first drilling an 8-inch diameter borehole to the water table (approximately 18 to 20 feet) using hollow stem augers, and grouting in a 5-inch diameter steel casing to that depth. In all five borings, the Coastal Plain/saprolite interface was encountered above the water table. A 4-inch diameter borehole was then advanced through the saturated saprolite and 3 feet into competent bedrock using a roller bit. The borehole below the steel casing was left open in each instance to facilitate the fracture/injection process. Three-inch inner diameter schedule 40 PVC pipe was placed loosely in each of the boreholes to prevent collapse. This PVC pipe was removed only during fracturing/injection and only from the injection well currently in use. Details regarding the construction of the injection wells are shown in Table 3 below.

TABLE 3
Pilot Study Injection Wells
Site 9, NSWC White Oak

Station ID	Installation Date	Aquifer Zone	Top of Bedbock (ft bls)	Bottom of Steel Casing (ft bls)
09IW01	07/16/03	Saprolite	28.9	19.2
09IW02	07/16/03	Saprolite	54	18.8
09IW03	07/16/03	Saprolite	23.40	19.0
09IW04	07/16/03	Saprolite	29.95	18.8
09IW05	07/16/03	Saprolite	29.7	18.5

Fracturing and Injection Process

Pneumatic fracturing and sodium lactate injection focussed on the borehole interval between the bottom of the steel casing and the top of the bedrock. This interval ranged from 4 to 35 feet, but was typically about 11 feet thick. ARS equipment enables fracturing/injection in 3 foot intervals. Thus, between two and six fracture/injection intervals were completed (beginning with the deepest) in each of the five boreholes. An attempt was made to complete fracturing at all borings prior to any lactate injection. This would promote the creation of an interconnected fracture network across the site prior to injection, thereby enhancing lactate distribution.

Work onsite began Monday, July 21, 2003. Fracturing was completed at wells 09IW01 and 09IW03, on Tuesday July 22, 2003. However, upon completion of the upper fracture interval at 09IW03, the bottom fracture interval collapsed and was lost. At this point the approach

was revised so that lactate would be injected into each interval immediately follow fracturing at that interval to avoid further borehole loss. Fracturing and injection was completed at 09IW02 on Wednesday, July 23, at 09IW04 on Thursday, July 24 and at 09IW05 on Friday, July 25. Full fracturing and injection process details are given in the ARS summary report *Pneumatic Fracturing and Liquid Atomized Injection of Sodium Lactate to Enhance Bioremediation of TCE and RDX,* which is provided in Appendix E.

File Path: v:\18gis\whiteoak\wo-ou1-figures3_chapter_4.apr

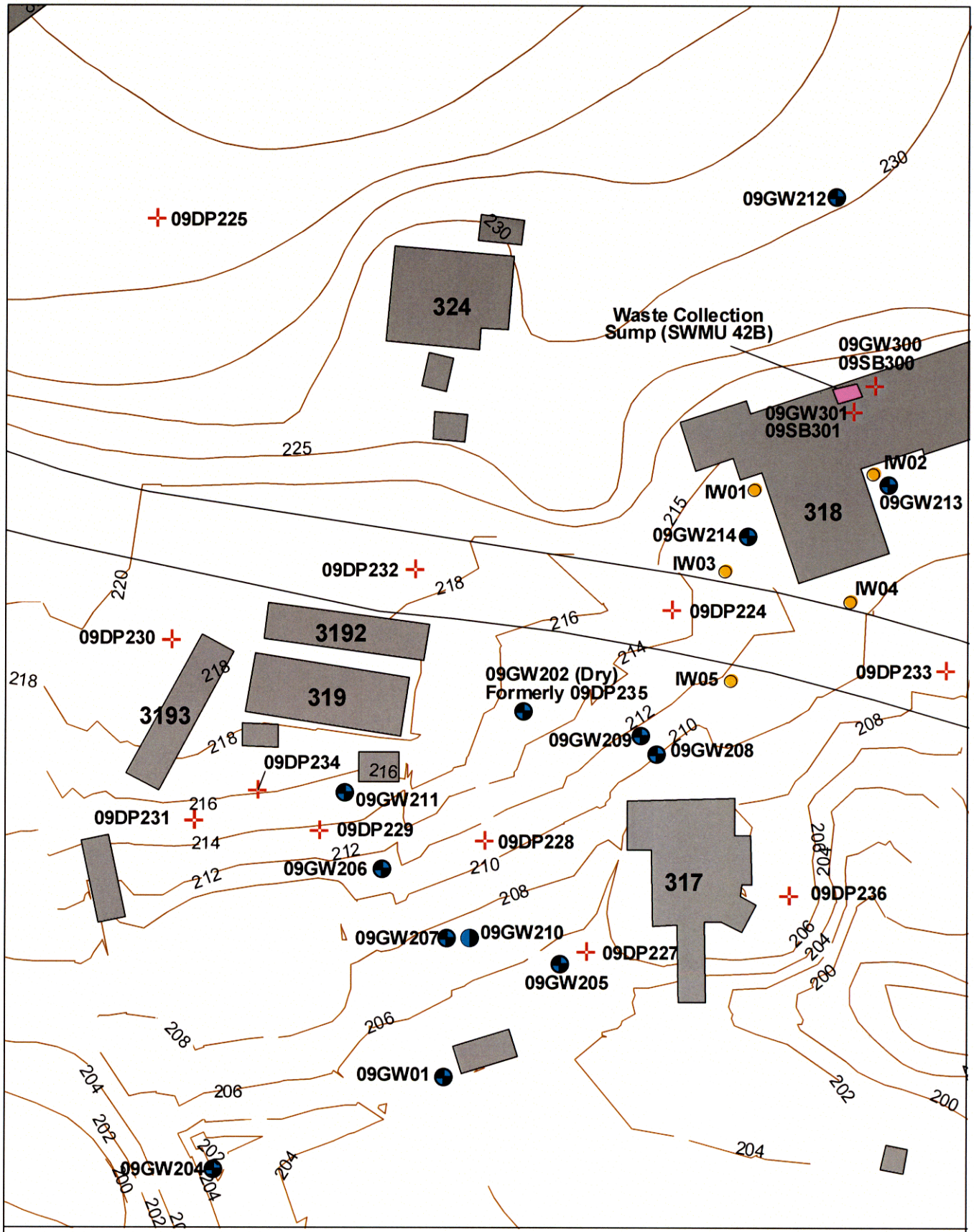

LEGEND

- Lactate Injection Boring
- Monitoring Well (Saprolite)
- Monitoring Well (Bedrock)
- Former Temporary Well/Geoprobe Location
- Roads
- Topography
- Buildings

N

25 0 25 50 Feet

Figure 1
Pilot Test Location and Baseline
Sampling Locations (June, July 2003)
Site 9 Pilot Test Baseline Memo
NSWC White Oak, Silver Spring, Maryland

CH2MHILL

File Path: v:\18gis\whiteoak\wo-ou1-figures3_chapter_4.apr

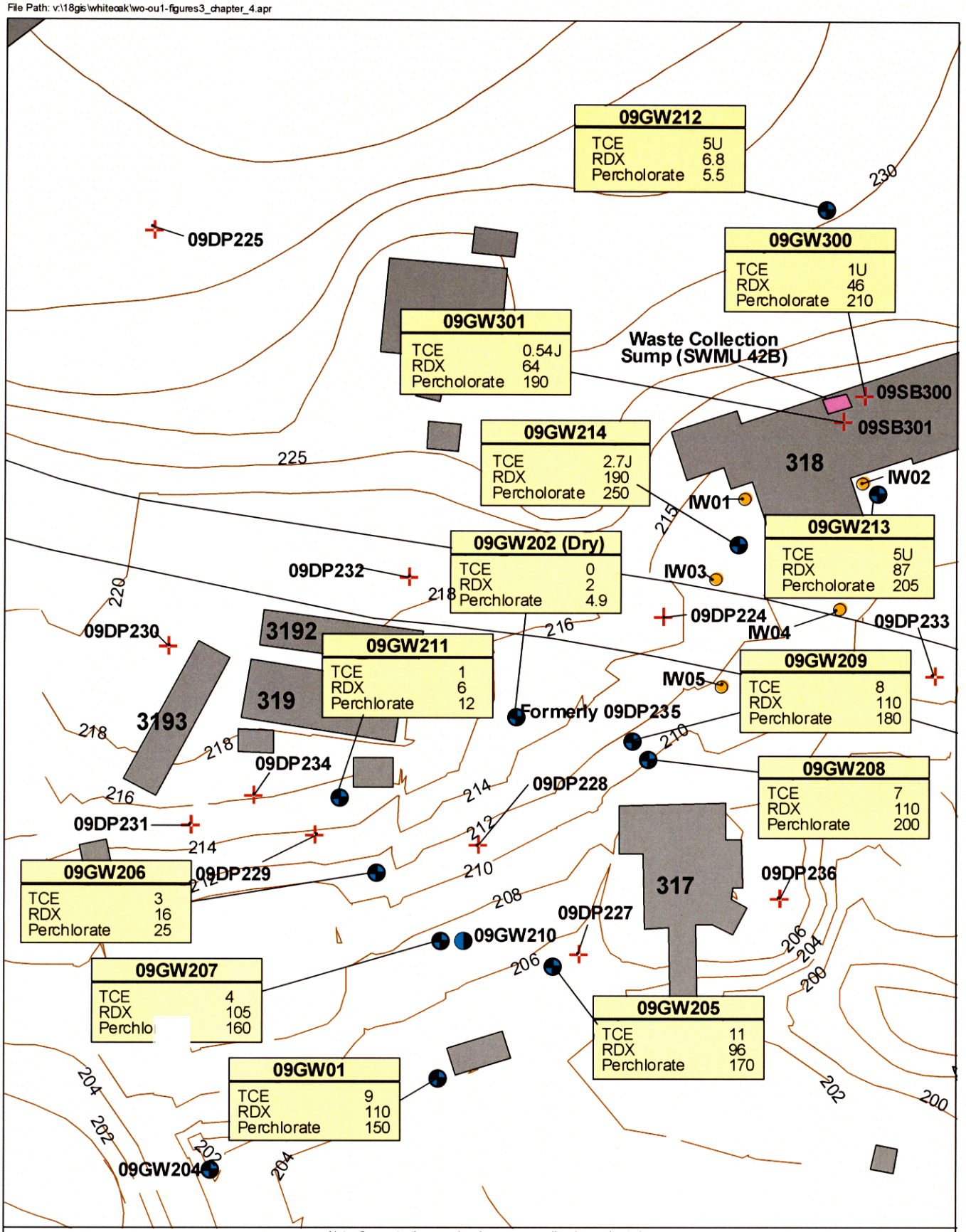

LEGEND

- Lactate Injection Boring
- Monitoring Well (Saprolite)
- Monitoring Well (Bedrock)
- Former Temporary Well/Geoprobe Location
- Roads
- Topography (5 feet Intervals)
- Buildings

Note: Concentrations are in micrograms per liter (groundwater)

N

25 0 25 50 Feet

Figure 2
Pilot Test Baseline
Sampling Results (June, July 2003)
Site 9 Pilot Test Baseline Memo
NSWC White Oak, Silver Spring, Maryland

CH2MHILL

File Path: v:\18gis\whiteoak\wo-ou1-figures3_chapter_4.apr

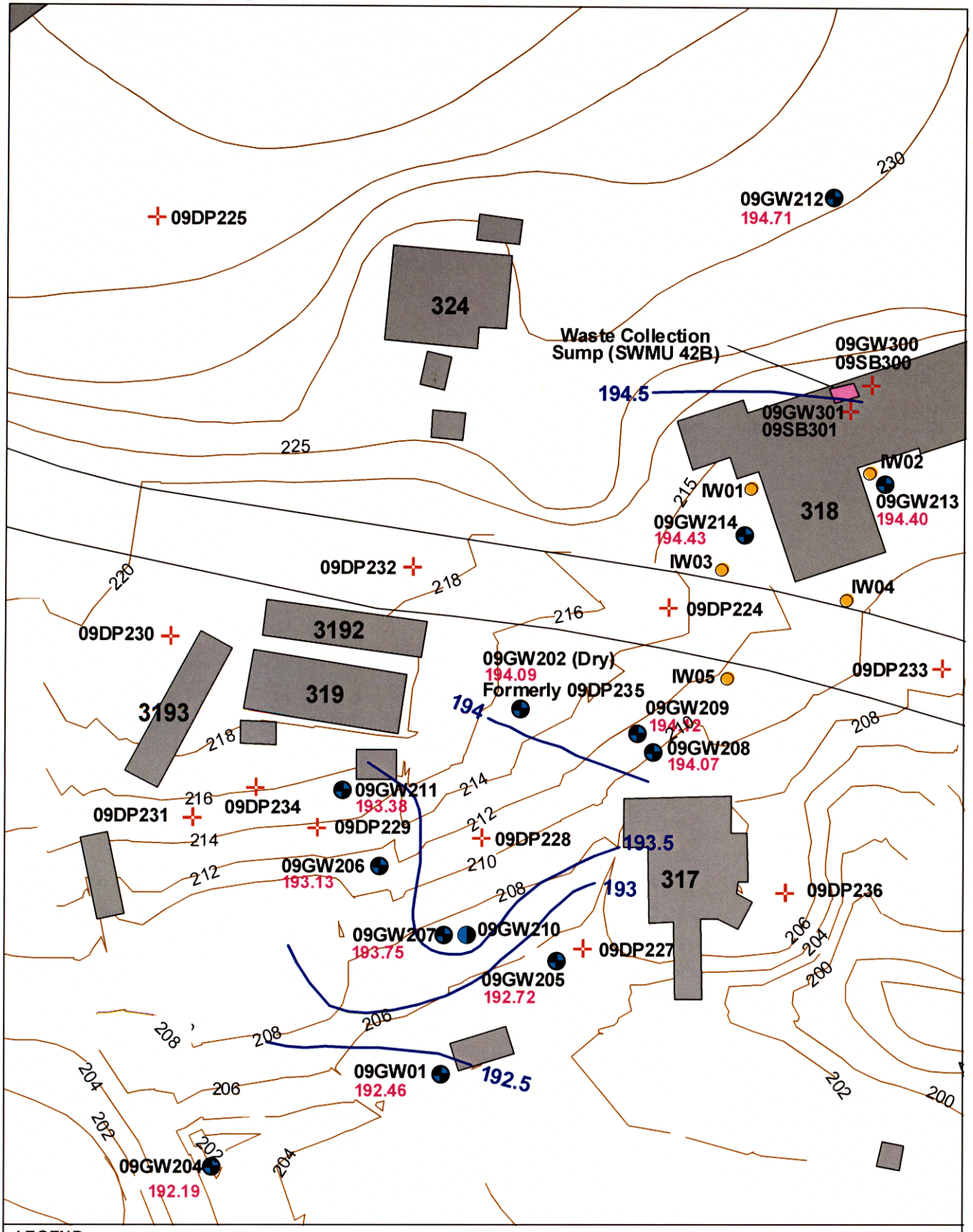

LEGEND

- Lactate Injection Boring
- Monitoring Well (Saprolite)
- Monitoring Well (Bedrock)
- Former Temporary Well/Geoprobe Location
- Roads
- Topography (5 feet Intervals)
- Buildings
- Groundwater Elevation Contours
- 193.47 = Groundwater Elevations

N

25 0 25 50 Feet

Figure 3
Groundwater Elevation Contours
Site 9 Pilot Test Baseline Memo
NSWC White Oak, Silver Spring, Maryland

CH2MHILL

APPENDIX A

Soil Boring Logs

CH2MHILL

PROJECT NUMBER	BORING NUMBER	
180396.PT.SI	09GW205	SHEET 1 OF 1

SOIL BORING LOG

PROJECT : White Oak — LOCATION : Silver Spring, Maryland

ELEVATION : — DRILLING CONTRACTOR : Groundwater Systems

DRILLING METHOD AND EQUIPMENT USED : Air Rotary & 2-foot long split spoons

WATER LEVELS 13' — START : 05/29/2003 — END : 1/17/2003 — GEOLOGIST : C. Brown

DEPTH BELOW SURFACE (FT)	INTERVAL (FT)	RECOVERY (IN)	#/TYPE	STANDARD PENETRATION TEST RESULTS 6"-6"-6"-6" (N)	SOIL DESCRIPTION: SOIL NAME, USCS GROUP SYMBOL, COLOR, MOISTURE CONTENT, RELATIVE DENSITY, OR CONSISTENCY SOIL STRUCTURE, MINERALOGY	COMMENTS: DEPTH OF CASING, DRILLING RATE, DRILLING FLUID LOSS, TESTS, AND INSTRUMENTATION. OVM (ppm): Breathing Zone Above Hole
0						
5						
10	10'-12'	1'	1	-	Yellowish-orange fine to coarse sand and gravel. Large rounded quarzite gravel. Loose sand, dry.	PID - 0 ppm
15	15'-17'	8"	2		Top 4" is fine to coarse sand and gravel. Rounded quartz gravel. Saturated. Bottom 4: is saprolite. Weathered rock, orange, brown and red dense sands with biotite and muscovite fragments present.	PID - 0 ppm
20	20'-22'	4"	3		Fine to coarse sand and gravel. Subangular quartz grav Saturated	PID - 0 ppm
25	26'				Bedrock	
30						

CH2MHILL

PROJECT NUMBER	BORING NUMBER	
180396.PT.SI	09GW206	SHEET 1 OF 1

SOIL BORING LOG

PROJECT : White Oak — LOCATION : Silver Spring, Maryland

ELEVATION : — DRILLING CONTRACTOR : Groundwater Systems

DRILLING METHOD AND EQUIPMENT USED : Hollow Stem Auger & 2-foot long split spoons

WATER LEVELS : 19.5' — START : 05/28/2003 — END : 05/28/2003 — GEOLOGIST : C. Brown

DEPTH BELOW SURFACE (FT)	INTERVAL (FT)	RECOVERY (IN)	#/TYPE	STANDARD PENETRATION TEST RESULTS 6"-6"-6"-6" (N)	SOIL DESCRIPTION: SOIL NAME, USCS GROUP SYMBOL, COLOR, MOISTURE CONTENT, RELATIVE DENSITY, OR CONSISTENCY SOIL STRUCTURE, MINERALOGY	COMMENTS: DEPTH OF CASING, DRILLING RATE, DRILLING FLUID LOSS, TESTS, AND INSTRUMENTATION. OVM (ppm): Breathing Zone Above Hole
0						
5						
10						
15						
20	19.5'-21.5'	8"	1	21,50/2	Saprolite - Dense fine sand. Gray sand with layers of red, dark brown and yellow sands.	PID - 0 ppm
25	24.5-26.5	6"	2	50/4	Same as above. Saprolite. Very dense sand.	PID - 0 ppm
30						

CH2MHILL

PROJECT NUMBER	BORING NUMBER	
180396.PT.SI	09GW207	SHEET 1 OF 1

SOIL BORING LOG

PROJECT : White Oak — LOCATION : Silver Spring, Maryland

ELEVATION : — DRILLING CONTRACTOR : Groundwater Systems

DRILLING METHOD AND EQUIPMENT USED : Air Rotary & 2-foot long split spoons

WATER LEVELS : — START : 05/30/2003 — END : 05/30/2003 — GEOLOGIST : C. Brown

DEPTH BELOW SURFACE (FT)	INTERVAL (FT)	RECOVERY (IN)	#/TYPE	STANDARD PENETRATION TEST RESULTS 6"-6"-6"-6" (N)	SOIL DESCRIPTION: SOIL NAME, USCS GROUP SYMBOL, COLOR, MOISTURE CONTENT, RELATIVE DENSITY, OR CONSISTENCY SOIL STRUCTURE, MINERALOGY	COMMENTS: DEPTH OF CASING, DRILLING RATE, DRILLING FLUID LOSS, TESTS, AND INSTRUMENTATION. OVM (ppm): Breathing Zone Above Hole
0						
5						
10						
	10'-12'	2"	1	-	Yellow-brown fine to medium sand. Loose. Wet.	PID - 0 ppm
15						
	15'-17'	3"	2	-	Same as above. Wet. Some mica fragments present.	PID - 0 ppm
20						
	20'-22'	2"	3	-	Same as above. Saturated.	PID - 0 ppm
25						
	25'-27'	4"	4	-	Same as above. Saturated. Some quarzite rounded gravel.	PID - 0 ppm
30						

CH2MHILL

PROJECT NUMBER	BORING NUMBER	
180396.PT.SI	09GW209	SHEET 1 OF 1

SOIL BORING LOG

PROJECT : White Oak — LOCATION : Silver Spring, Maryland

ELEVATION : — DRILLING CONTRACTOR : Groundwater Systems

DRILLING METHOD AND EQUIPMENT USED : Hollow Stem Auger & 2-foot long split spoons

WATER LEVELS 17.80' — START : 05/29/2003 — END : 05/29/2003 — GEOLOGIST : C. Brown

DEPTH BELOW SURFACE (FT)	INTERVAL (FT)	RECOVERY (IN)	#/TYPE	STANDARD PENETRATION TEST RESULTS 6"-6"-6"-6" (N)	SOIL DESCRIPTION: SOIL NAME, USCS GROUP SYMBOL, COLOR, MOISTURE CONTENT, RELATIVE DENSITY, OR CONSISTENCY SOIL STRUCTURE, MINERALOGY	COMMENTS: DEPTH OF CASING, DRILLING RATE, DRILLING FLUID LOSS, TESTS, AND INSTRUMENTATION. OVM (ppm): Breathing Zone Above Hole
0						
5						
10						
15						
20	20'-22'	3"	1	50/1	Saprolite. Fine sand with angular rock fragments. Yellow, brown, and gray sands. Some clay lenses at bottom of spoon. High plasticity.	PID - 0 ppm
25	25'-27'	3"	2	38-21-50/3	Top 1.5" is saprolite. Same as above. Bottom 1.5" is clay silty sand, brown-light brown. Saturated.	PID - 0 ppm
30						

CH2MHILL

PROJECT NUMBER	BORING NUMBER	
180396.PT.SI	09GW211	SHEET 1 OF 1

SOIL BORING LOG

PROJECT : White Oak — LOCATION : Silver Spring, Maryland

ELEVATION : — DRILLING CONTRACTOR : Groundwater Systems

DRILLING METHOD AND EQUIPMENT USED : Hollow Stem Auger & 2-foot long split spoons

WATER LEVELS : 26.5' — START : 05/28/2003 — END : 05/28/2003 — GEOLOGIST : C. Brown

DEPTH BELOW SURFACE (FT)	INTERVAL (FT)	RECOVERY (IN)	#/TYPE	STANDARD PENETRATION TEST RESULTS 6"-6"-6"-6" (N)	SOIL DESCRIPTION: SOIL NAME, USCS GROUP SYMBOL, COLOR, MOISTURE CONTENT, RELATIVE DENSITY, OR CONSISTENCY SOIL STRUCTURE, MINERALOGY	COMMENTS: DEPTH OF CASING, DRILLING RATE, DRILLING FLUID LOSS, TESTS, AND INSTRUMENTATION. OVM (ppm): Breathing Zone Above Hole
0						
5						
10	10'-12'	6"	1	19-30-50/2	Fine to coarse sand and gravel. Quartzite gravel. Loose sand Orange and light brown, dry.	PID - 0 ppm
15	14.5-16.5	1.2"	2	16-12-13-16	Top 6" is fine to medium loose sand with some gravel. Light brown-orange, dry. Some micas present. Next 2" is orange-red sand with some mica fragments. Bottom 6" is saprolite - gray, yellow and orange fine dense sand	PID - 0 ppm
20	19.5-21.5	1'	3	13-14-29-41	Top 2" is slough. Saprolite. Same as above. Dry.	PID - 0 ppm
25	24.5-26.5	8"	4	24-50/3	Top 2" is fine sandy silty clay. Micas present. Saprolite; Same as above. Gray, reddish yellow dense sands. Moist.	PID - 0 ppm
30						

CH2MHILL

PROJECT NUMBER	BORING NUMBER	
180396.PT.SI	09GW212	SHEET 1 OF 1

SOIL BORING LOG

PROJECT : White Oak — LOCATION : Silver Spring, Maryland

ELEVATION : — DRILLING CONTRACTOR : Groundwater Systems

DRILLING METHOD AND EQUIPMENT USED : Hollow Stem Auger & 2-foot long split spoons

WATER LEVELS : 34.75' BTOC — START : 06/25/2003 — END : 06/25/2003 — GEOLOGIST : E. Carpentti

DEPTH BELOW SURFACE (FT)	INTERVAL (FT)	RECOVERY (IN)	#/TYPE	STANDARD PENETRATION TEST RESULTS 6"-6"-6"-6" (N)	SOIL DESCRIPTION: SOIL NAME, USCS GROUP SYMBOL, COLOR, MOISTURE CONTENT, RELATIVE DENSITY, OR CONSISTENCY SOIL STRUCTURE, MINERALOGY	COMMENTS: DEPTH OF CASING, DRILLING RATE, DRILLING FLUID LOSS, TESTS, AND INSTRUMENTATION. OVM (ppm): Breathing Zone Above Hole
0	0' - 2'	6"	1-S	4-4-4-3 (7)	Fine silty sand with pebbles and quartz gravel. Dark yellowish brown, 10YR 4/4.	
5	5' - 7'	12"	2-S	23-24-48-50 (72)	Fine silty sand with quartz gravel, ~40% gravel, brownish yellow 10YR 6/6.	
10	10' - 12'	18"	3-S	11-13-18-19 (31)	Fine sand and silt, yellowish red 5YR 5/8, grading to saprolite, reddish yellow, abundant muscovite present.	
15	15' - 17'	24"	4-S	10-23-35-45 (58)	Saprolite with abundant mica, layers of dark red 10YR 3/6 and strong brown, 7.5YR 5/8.	
20	20' - 22'	18"	5-S	16-34-42-46 (76)	Saprolite, abundant biotite at top of spoon, grading in color to strong brown 7.5 YR 5/6.	
25	25' - 27'	6"	6-S	29-50/3	Saprolite, abundant mica present, strong brown 7.5YR 5/6.	
30	30' - 32'	3"	7-S	50/4	Saprolite, very dense, strong brown 7.5YR 5/6, dry.	
35						

CH2MHILL

PROJECT NUMBER	BORING NUMBER	
180396.PT.SI	09GW213	SHEET 1 OF 1

SOIL BORING LOG

PROJECT : White Oak — LOCATION : Silver Spring, Maryland

ELEVATION : — DRILLING CONTRACTOR : Groundwater Systems

DRILLING METHOD AND EQUIPMENT USED : Hollow Stem Auger & 2-foot long split spoons

WATER LEVELS : 20.23' BTOC — START : 06/26/2003 — END : 06/26/2003 — GEOLOGIST : E. Carpentti

DEPTH BELOW SURFACE (FT)	INTERVAL (FT)	RECOVERY (IN)	#/TYPE	STANDARD PENETRATION TEST RESULTS 6"-6"-6"-6" (N)	SOIL DESCRIPTION: SOIL NAME, USCS GROUP SYMBOL, COLOR, MOISTURE CONTENT, RELATIVE DENSITY, OR CONSISTENCY; SOIL STRUCTURE, MINERALOGY	COMMENTS: DEPTH OF CASING, DRILLING RATE, DRILLING FLUID LOSS, TESTS, AND INSTRUMENTATION. OVM (ppm): Breathing Zone Above Hole
0	0' - 2'	24"	1-S		Fine silty sand with quartz gravel, dark brown 7.5YR 5/6.	
5	5' - 7'	24"	2-S		The same silty sand grading from brownish yellow fine sand 10YR 5/6 to light brwnish grey silty sand, damp.	
10	10' - 12'	3"	3-S		Saprolite, yellowish brown 10YR 5/6, abundant mica present.	
15	15' - 17'	0"			Refusal.	
20						

CH2MHILL

PROJECT NUMBER	BORING NUMBER	
180396.PT.SI	09GW214	SHEET 1 OF 1

SOIL BORING LOG

PROJECT : White Oak — LOCATION : Silver Spring, Maryland

ELEVATION : — DRILLING CONTRACTOR : Groundwater Systems

DRILLING METHOD AND EQUIPMENT USED : Hollow Stem Auger & 2-foot long split spoons

WATER LEVELS : 20.23' BTOC — START : 06/25/2003 — END : 06/25/2003 — GEOLOGIST : E. Carpentti

DEPTH BELOW SURFACE (FT)	INTERVAL (FT)	RECOVERY (IN)	#/TYPE	STANDARD PENETRATION TEST RESULTS 6"-6"-6"-6" (N)	SOIL DESCRIPTION: SOIL NAME, USCS GROUP SYMBOL, COLOR, MOISTURE CONTENT, RELATIVE DENSITY, OR CONSISTENCY SOIL STRUCTURE, MINERALOGY	COMMENTS: DEPTH OF CASING, DRILLING RATE, DRILLING FLUID LOSS, TESTS, AND INSTRUMENTATION. OVM (ppm): Breathing Zone Above Hole
0	0' - 2'	0"	1-S	10-10-11-12 (22)	No Recovery	
5	5' - 7'	24"	2-S	10-13-15-19 (28)	Fine silty sand, some quartz pebbles present, yellowish red 5YR 4/6.	
10	10' - 12'	24"	3-S	10-13-15-19 (28)	Fine to medium grained sand with some quartz pebble and mica flakes present.	
15	15' - 17'	12"	4-S	16-24-37-36 (61)	Saprolite, interbedded layers of light brown and dark red, mica present, abundant brownish yellow 10YR 6/6, damp.	
20	20' - 22'	4"	5-S	50/4	Saprolite, dense, very damp. Abundant mica present. Yellowish brown 10YR 4/4.	
	22' - 23'	4"	6-S	50/4	Saprolite, very wet, dark yellowish brown 10YR 4/4 Hit refusal.	
	End of boring					
25						

CH2MHILL

PROJECT NUMBER	BORING NUMBER	
180396.PT.SI	09SB301	SHEET 1 OF 1

SOIL BORING LOG

PROJECT : White Oak — LOCATION : Silver Spring, Maryland

ELEVATION : — DRILLING CONTRACTOR : Groundwater Systems

DRILLING METHOD AND EQUIPMENT USED : Hollow Stem Auger & 2-foot long split spoons

WATER LEVELS : — START : 06/23/2003 — END : 06/23/2003 — GEOLOGIST : E. Carpenetti

DEPTH BELOW SURFACE (FT)	INTERVAL (FT)	RECOVERY (IN)	#/TYPE	STANDARD PENETRATION TEST RESULTS 6"-6"-6"-6" (N)	SOIL DESCRIPTION: SOIL NAME, USCS GROUP SYMBOL, COLOR, MOISTURE CONTENT, RELATIVE DENSITY, OR CONSISTENCY SOIL STRUCTURE, MINERALOGY	COMMENTS: DEPTH OF CASING, DRILLING RATE, DRILLING FLUID LOSS, TESTS, AND INSTRUMENTATION. OVM (ppm): Breathing Zone Above Hole
0	0' - 7"				Concrete flooring	
	7" - 4'				Fine silty sand with quartz gravel, light reddish yellow.	
5	4' - 6'				Fine grained sand and silt with quartz gravel, reddish yellow.	
	6' - 8'				Silty clay, hard, dense, some quartz gravel present, abundant mica flakes, dark red.	
10	8' - 10'				No recovery	
	10' - 12'				Silty clay to fine silty sand, some small pebbles present, yellowish red to dark red.	
15	12' - 16'				Fine sand and silt, dark red. Layers of weathered material of light grey to black. Approximately 1" silty sand lens, fine grained, yellowish red. Saprolite.	
20	16' - 20.5'				Saprolite, same as above.	
	End of boring					
25						

APPENDIX B

Well Completion Diagrams

PROJECT NUMBER	WELL NUMBER		
180396	09GW205	SHEET 1	OF 1

CH2MHILL

WELL COMPLETION DIAGRAM

PROJECT : White Oak OU-1 RI
LOCATION : Silver Spring, Maryland
DRILLING METHOD AND EQUIPMENT USED : HSA
DRILLING CONTRACTOR : Groundwater Systems START : 05/29/03 END : 05/29/03 GEOLOGIST : C. Brown

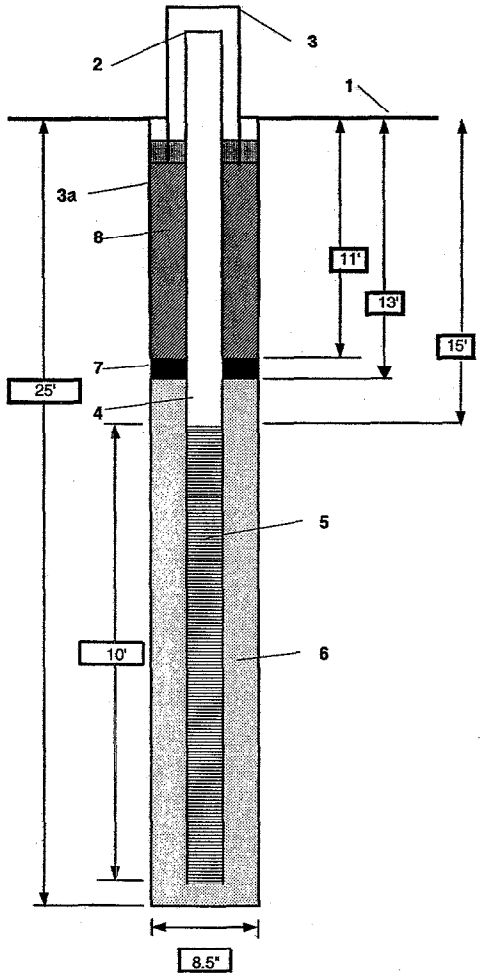

1- Ground elevation at well	204.0'
2- Top of casing elevation	207.38'
3- Wellhead protection cover type	2' Stickup
a) Dia./type of outer surface casing	4"
b) concrete pad dimensions	3 x 3
4- Dia./type of inner well casing	2" I.D. Sch 40 PVC
5- Type/slot size of screen	2" PVC Screen (.010 mm)
6- Type screen filter	#2 Sand
7- Type of seal	Bentonite seal, #2 Sand
a) Quantity used	
8- Grout	
a) Grout mix used	1 bag Portland + 5 lbs bentonite per 8 gal water
b) Method of placement	Tremmie pipe
Development method	Pump/Surge
Development time	1 hr
Estimated purge volume	20 gallons

PROJECT NUMBER	WELL NUMBER		
180396	09GW206	SHEET 1	OF 1

CH2MHILL

WELL COMPLETION DIAGRAM

PROJECT : White Oak OU-1 RI
LOCATION : Silver Spring, Maryland
DRILLING METHOD AND EQUIPMENT USED : HSA
DRILLING CONTRACTOR : Groundwater Systems START : 05/28/03 END : 05/28/03 GEOLOGIST : C. Brown

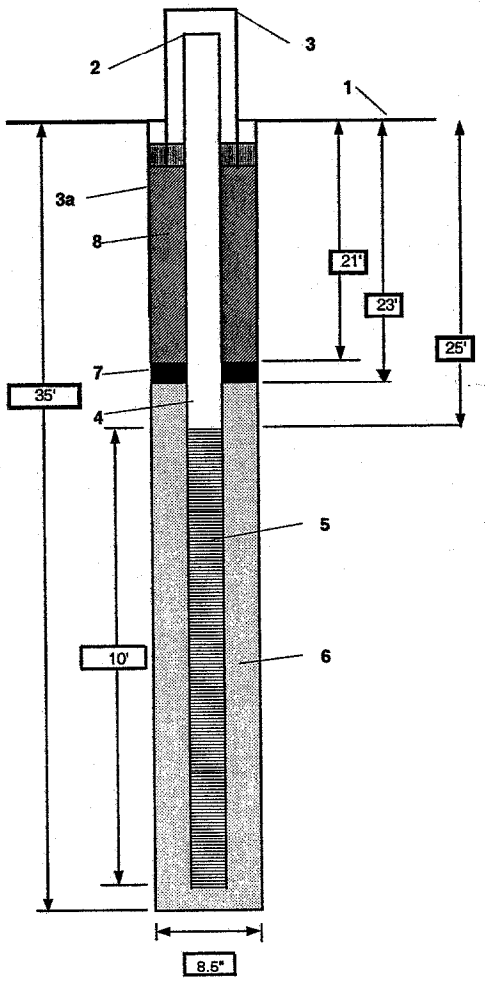

1- Ground elevation at well	211.1'
2- Top of casing elevation	213.67'
3- Wellhead protection cover type	2' Stickup
a) Dia./type of outer surface casing	4"
b) concrete pad dimensions	3 x 3
4- Dia./type of inner well casing	2" I.D. Sch 40 PVC
5- Type/slot size of screen	2" PVC Screen (.010 mm)
6- Type screen filter	#2 Sand
7- Type of seal	Bentonite seal, #2 Sand
a) Quantity used	
8- Grout	
a) Grout mix used	1 bag Portland + 5 lbs bentonite per 8 gal water
b) Method of placement	Tremmie pipe
Development method	Pump/Surge
Development time	1 hr
Estimated purge volume	20 gallons

PROJECT NUMBER	WELL NUMBER		
180396	09GW207	SHEET 1	OF 1

CH2MHILL

WELL COMPLETION DIAGRAM

PROJECT : White Oak OU-1 RI
LOCATION : Silver Spring, Maryland
DRILLING METHOD AND EQUIPMENT USED : Air Rotary
DRILLING CONTRACTOR : Groundwater Systems START : 05/30/03 END : 05/30/03 GEOLOGIST : C. Brown

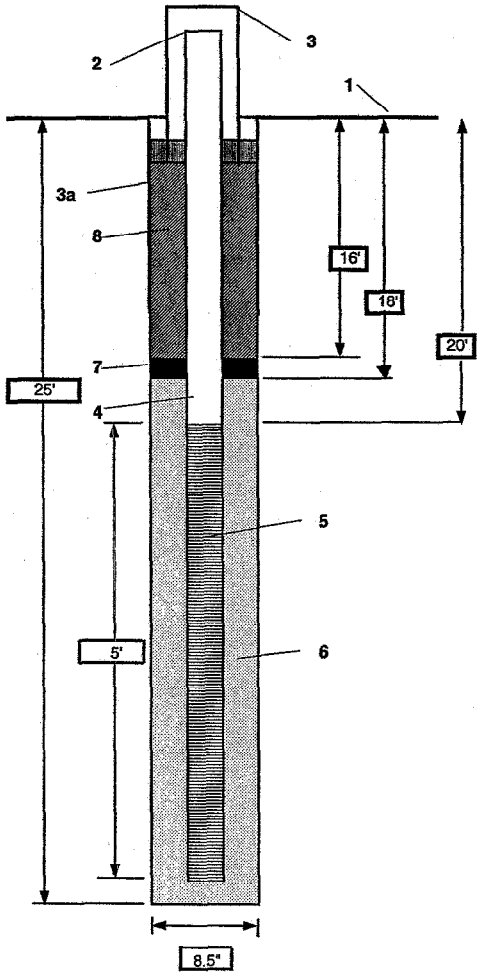

1- Ground elevation at well	206.7'
2- Top of casing elevation	209.05'
3- Wellhead protection cover type	2' Stickup
a) Dia./type of outer surface casing	4"
b) concrete pad dimensions	3 x 3
4- Dia./type of inner well casing	2" I.D. Sch 40 PVC
5- Type/slot size of screen	2" PVC Screen (.010 mm)
6- Type screen filter	#2 Sand
7- Type of seal	Bentonite seal, #2 Sand
a) Quantity used	
8- Grout	
a) Grout mix used	1 bag Portland + 5 lbs bentonite per 8 gal water
b) Method of placement	Tremmie pipe
Development method	Pump/Surge
Development time	1 hr
Estimated purge volume	35 gallons

CH2MHILL

PROJECT NUMBER	WELL NUMBER		
180396	09GW208	SHEET 1	OF 1

WELL COMPLETION DIAGRAM

PROJECT : White Oak OU-1 RI
LOCATION : Silver Spring, Maryland
DRILLING METHOD AND EQUIPMENT USED : Air Rotary
DRILLING CONTRACTOR : Groundwater Systems START : 05/30/03 END : 05/30/03 GEOLOGIST : C. Brown

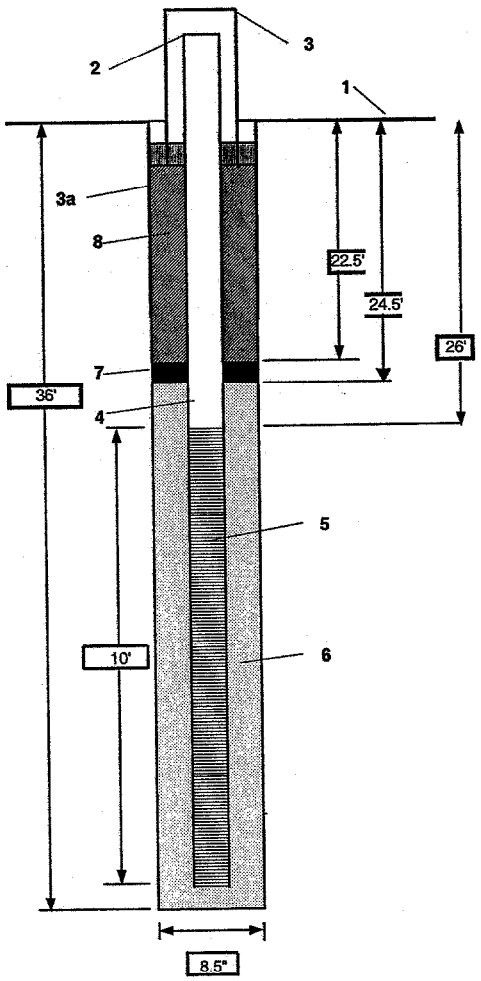

1- Ground elevation at well	~~211.8~~ 211.5
2- Top of casing elevation	213.98
3- Wellhead protection cover type	2' Stickup
a) Dia./type of outer surface casing	4"
b) concrete pad dimensions	3 x 3
4- Dia./type of inner well casing	2" I.D. Sch 40 PVC
5- Type/slot size of screen	2" PVC Screen (.010 mm)
6- Type screen filter	#2 Sand
7- Type of seal	Bentonite seal, #2 Sand
a) Quantity used	
8- Grout	
a) Grout mix used	1 bag Portland + 5 lbs bentonite per 8 gal water
b) Method of placement	Tremmie pipe
Development method	Pump/Surge
Development time	1 hr
Estimated purge volume	80 gallons

PROJECT NUMBER	WELL NUMBER		
180396	09GW209	SHEET 1	OF 1

CH2MHILL

WELL COMPLETION DIAGRAM

PROJECT : White Oak OU-1 RI
LOCATION : Silver Spring, Maryland
DRILLING METHOD AND EQUIPMENT USED : HSA
DRILLING CONTRACTOR : Groundwater Systems START : 05/29/03 END : 05/29/03 GEOLOGIST : C. Brown

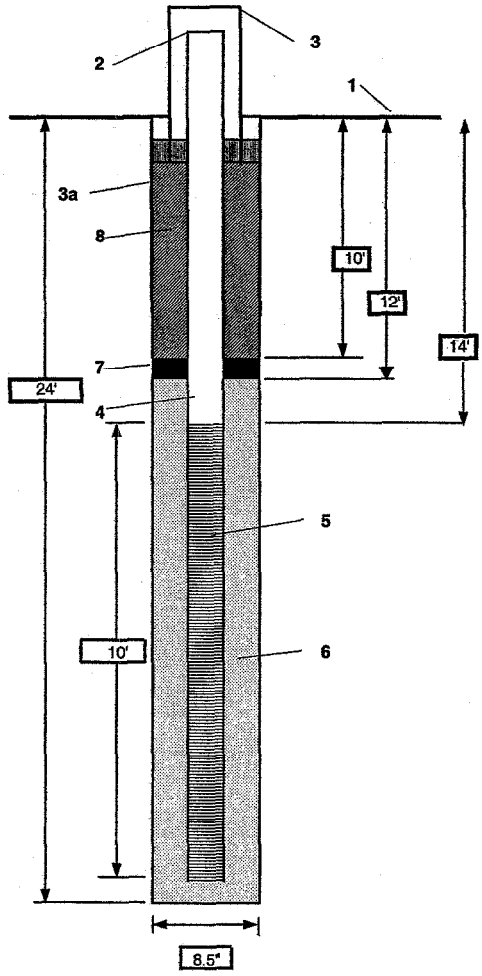

1- Ground elevation at well	211.8'
2- Top of casing elevation	214.44
3- Wellhead protection cover type	2' Stickup
a) Dia./type of outer surface casing	4"
b) concrete pad dimensions	3 x 3
4- Dia./type of inner well casing	2" I.D. Sch 40 PVC
5- Type/slot size of screen	2" PVC Screen (.010 mm)
6- Type screen filter	#2 Sand
7- Type of seal	Bentonite seal, #2 Sand
a) Quantity used	
8- Grout	
a) Grout mix used	1 bag Portland + 5 lbs bentonite per 8 gal water
b) Method of placement	Tremmie pipe
Development method	Pump/Surge
Development time	1 hr
Estimated purge volume	30 gallons

PROJECT NUMBER	WELL NUMBER		
180396	09GW210	SHEET 1	OF 1

CH2MHILL

WELL COMPLETION DIAGRAM

PROJECT : White Oak OU-1 RI
LOCATION : Silver Spring, Maryland
DRILLING METHOD AND EQUIPMENT USED : HSA
DRILLING CONTRACTOR : Groundwater Systems START : 05/29/03 END : 05/30/03 GEOLOGIST : G. Peters

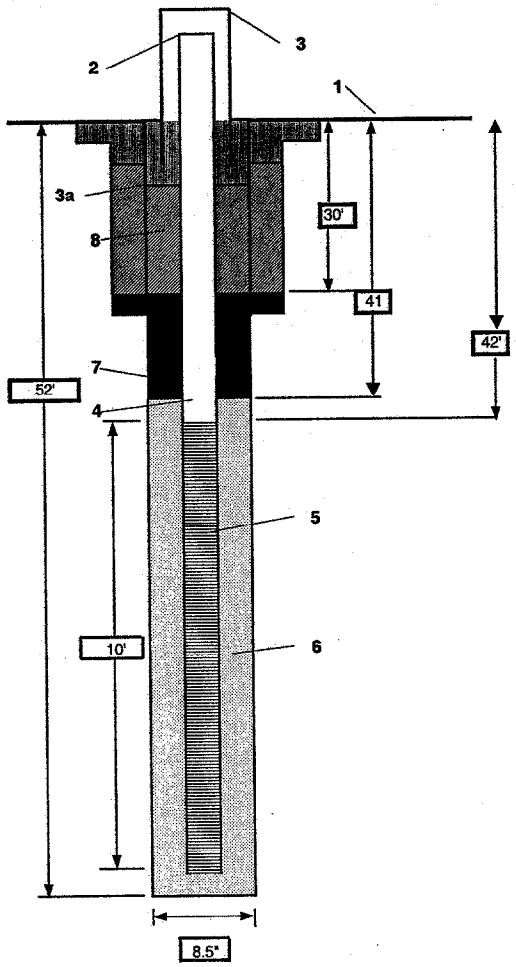

1- Ground elevation at well	206.3'
2- Top of casing elevation	209.67'
3- Wellhead protection cover type	2' Stickup
a) Dia./type of outer surface casing	NA
b) concrete pad dimensions	3 x 3
4- Dia./type of inner well casing	2" I.D. Sch 40 PVC
5- Type/slot size of screen	2" PVC Screen (.010 mm)
6- Type screen filter	#2 Sand
7- Type of seal	Bentonite seal, #2 Sand
a) Quantity used	
8- Grout	
a) Grout mix used	1 bag Portland + 5 lbs bentonite per 8 gal water
b) Method of placement	Tremmie pipe

PROJECT NUMBER	WELL NUMBER		
180396	09GW211	SHEET 1	OF 1

CH2MHILL

WELL COMPLETION DIAGRAM

PROJECT : White Oak OU-1 RI
LOCATION : Silver Spring, Maryland
DRILLING METHOD AND EQUIPMENT USED : HSA
DRILLING CONTRACTOR : Groundwater Systems START : 05/28/03 END : 05/28/03 GEOLOGIST : C. Brown

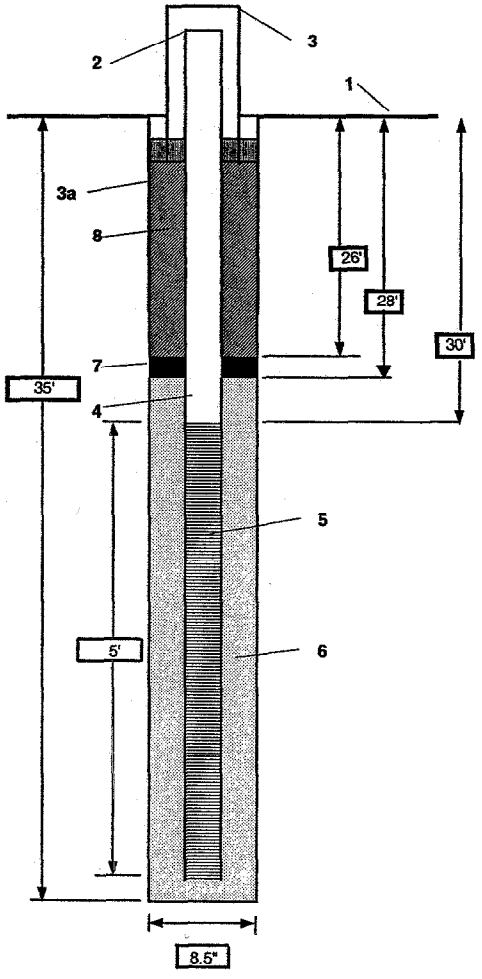

1- Ground elevation at well	215.1'
2- Top of casing elevation	217.79'
3- Wellhead protection cover type	2' Stickup
a) Dia./type of outer surface casing	4"
b) concrete pad dimensions	3 x 3
4- Dia./type of inner well casing	2" I.D. Sch 80 PVC
5- Type/slot size of screen	2" PVC Screen (.020 mm)
6- Type screen filter	#2 Sand
7- Type of seal	Bentonite seal, #2 Sand
a) Quantity used	
8- Grout	
a) Grout mix used	1 bag Portland + 5 lbs bentonite per 8 gal water
b) Method of placement	Tremmie pipe
Development method	Pump/Surge
Development time	1 hr
Estimated purge volume	

PROJECT NUMBER	WELL NUMBER		
180396	09GW212	SHEET 1	OF 1

CH2MHILL

WELL COMPLETION DIAGRAM

PROJECT : White Oak Sit 9 Pilot Test

LOCATION : Silver Spring, Maryland

DRILLING METHOD AND EQUIPMENT USED : Air Rotary

DRILLING CONTRACTOR : Groundwater Systems START : 06/26/03 END : 06/26/03 GEOLOGIST : E. Carpenetti

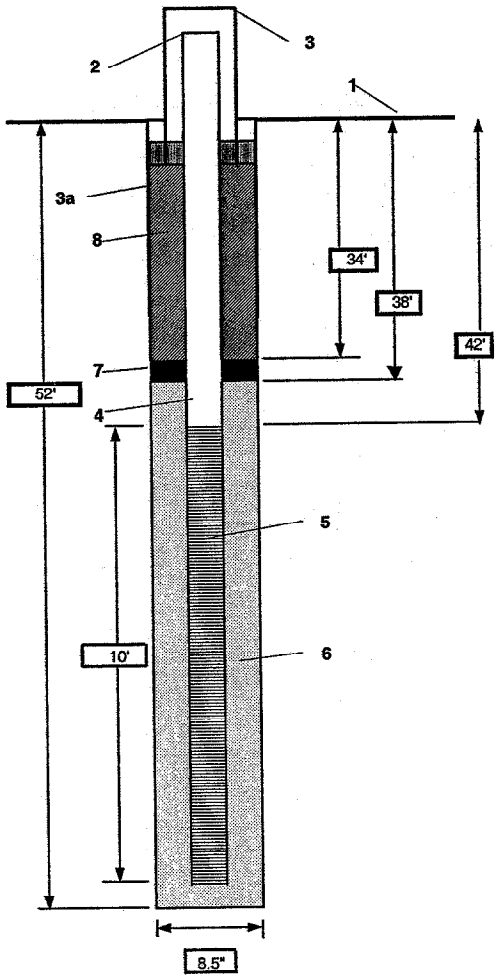

1- Ground elevation at well	227.9'
2- Top of casing elevation	230.51'
3- Wellhead protection cover type	2' Stickup
a) Dia./type of outer surface casing	4"
b) concrete pad dimensions	3 x 3
4- Dia./type of inner well casing	2" I.D. Sch 40 PVC
5- Type/slot size of screen	2" PVC Screen (.010 mm)
6- Type screen filter	#2 Sand
7- Type of seal	Bentonite seal, #2 Sand
a) Quantity used	
8- Grout	
a) Grout mix used	1 bag Portland + 5 lbs bentonite per 8 gal water
b) Method of placement	Tremmie pipe
Development method	Pump/Surge
Development time	1 hr
Estimated purge volume	

PROJECT NUMBER	WELL NUMBER		
180396	09GW213	SHEET 1	OF 1

CH2MHILL

WELL COMPLETION DIAGRAM

PROJECT : White Oak Site 9 Pilot Test
LOCATION : Silver Spring, Maryland
DRILLING METHOD AND EQUIPMENT USED : Air Rotary
DRILLING CONTRACTOR : Groundwater Systems START : 06/26/03 END : 06/26/03 GEOLOGIST : E. Carpenetti

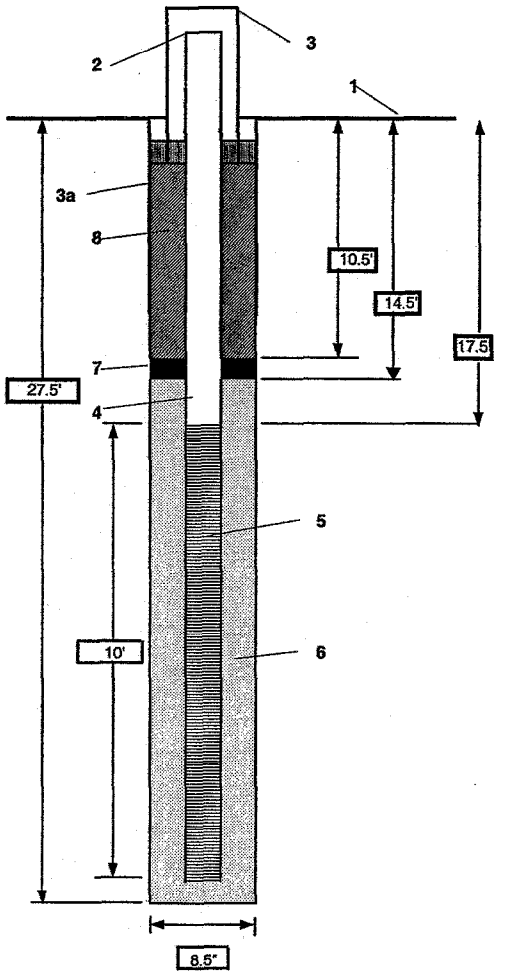

1- Ground elevation at well	213.8'
2- Top of casing elevation	215.90'
3- Wellhead protection cover type	2' Stickup
a) Dia./type of outer surface casing	4"
b) concrete pad dimensions	3 x 3
4- Dia./type of inner well casing	2" I.D. Sch 40 PVC
5- Type/slot size of screen	2" PVC Screen (.010 mm)
6- Type screen filter	#2 Sand
7- Type of seal	Bentonite seal, #2 Sand
a) Quantity used	
8- Grout	
a) Grout mix used	1 bag Portland + 5 lbs bentonite per 8 gal water
b) Method of placement	Tremmie pipe
Development method	Pump/Surge
Development time	1 hr
Estimated purge volume	

PROJECT NUMBER	WELL NUMBER		
180396	09GW214	SHEET 1	OF 1

CH2MHILL

WELL COMPLETION DIAGRAM

PROJECT : White Oak Site 9 Pilot Test
LOCATION : Silver Spring, Maryland
DRILLING METHOD AND EQUIPMENT USED : Air Rotary
DRILLING CONTRACTOR : Groundwater Systems START : 06/26/03 END : 06/26/03 GEOLOGIST : E. Carpenetti

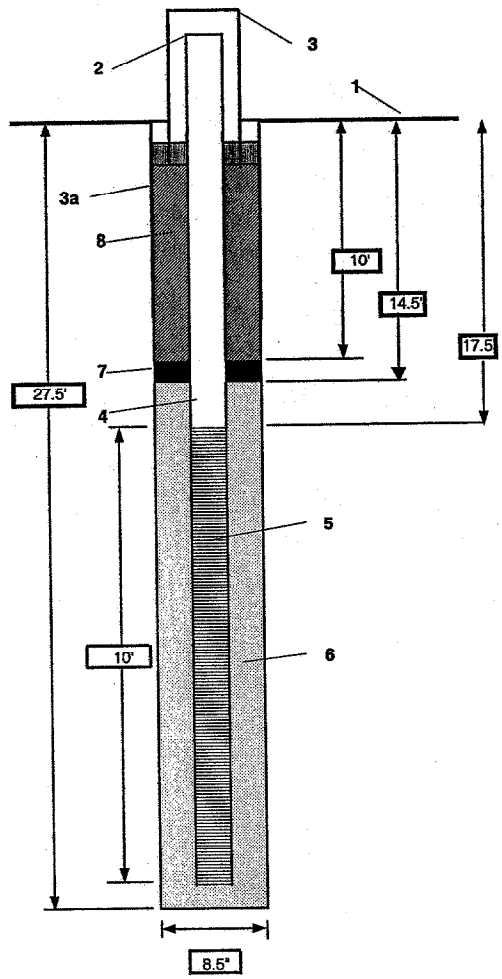

1- Ground elevation at well	212.9'
2- Top of casing elevation	215.58'
3- Wellhead protection cover type	2' Stickup
a) Dia./type of outer surface casing	4"
b) concrete pad dimensions	3 x 3
4- Dia./type of inner well casing	2" I.D. Sch 40 PVC
5- Type/slot size of screen	2" PVC Screen (.010 mm)
6- Type screen filter	#2 Sand
7- Type of seal	Bentonite seal, #2 Sand
a) Quantity used	
8- Grout	
a) Grout mix used	1 bag Portland + 5 lbs bentonite per 8 gal water
b) Method of placement	Tremmie pipe
Development method	Pump/Surge
Development time	1 hr
Estimated purge volume	

PROJECT NUMBER	WELL NUMBER	
180396	09IW01	SHEET 1 OF 1

CH2MHILL

WELL COMPLETION DIAGRAM

PROJECT : White Oak Site 9 Pilot Test
LOCATION : Silver Spring, Maryland
DRILLING METHOD AND EQUIPMENT USED : HSA/Air rotary
DRILLING CONTRACTOR : Groundwater System START : 07/16/03 END : 07/16/2003 GEOLOGIST : C. Brown

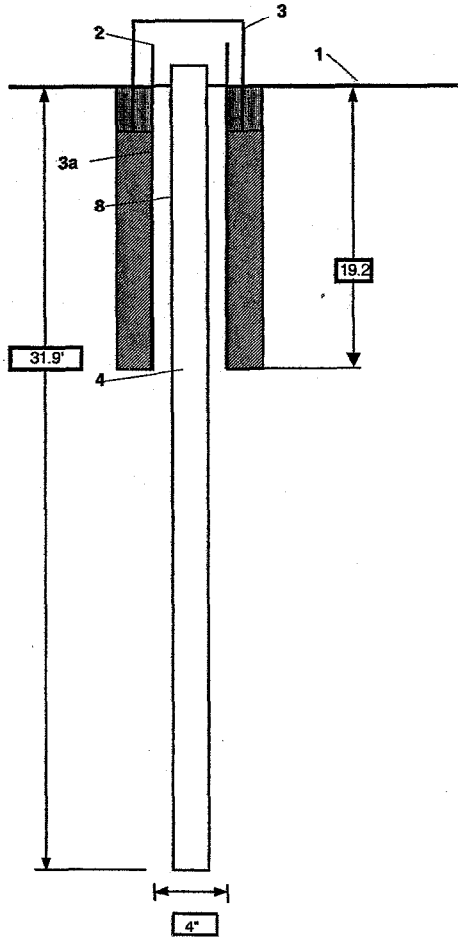

1- Ground elevation at well	214.0'
2- Top of casing elevation	(inner steel casing)
3- Wellhead protection cover type	0.5' Stickup
a) Dia./type of outer surface casing	5" steel
b) concrete pad dimensions	3 x 3
4- Dia./type of inner well casing	Open borehole with a 3" I.D. Sch 40 PVC placed loosely in hole to keep boring open - no screen.
5- Type/slot size of screen	
6- Type screen filter	
7- Type of seal	
a) Quantity used	
8- Grout	
a) Grout mix used	1 bag Portland + 5 lbs bentonite per 8 gal water
b) Method of placement	Tremmie pipe

PROJECT NUMBER	WELL NUMBER		
180396	09IW02	SHEET 1	OF 1

CH2MHILL

WELL COMPLETION DIAGRAM

PROJECT : White Oak Site 9 Pilot Test
LOCATION : Silver Spring, Maryland
DRILLING METHOD AND EQUIPMENT USED : HSA/Air rotary
DRILLING CONTRACTOR : Groundwater System START : 07/16/03 END : 07/16/2003 GEOLOGIST : C. Brown

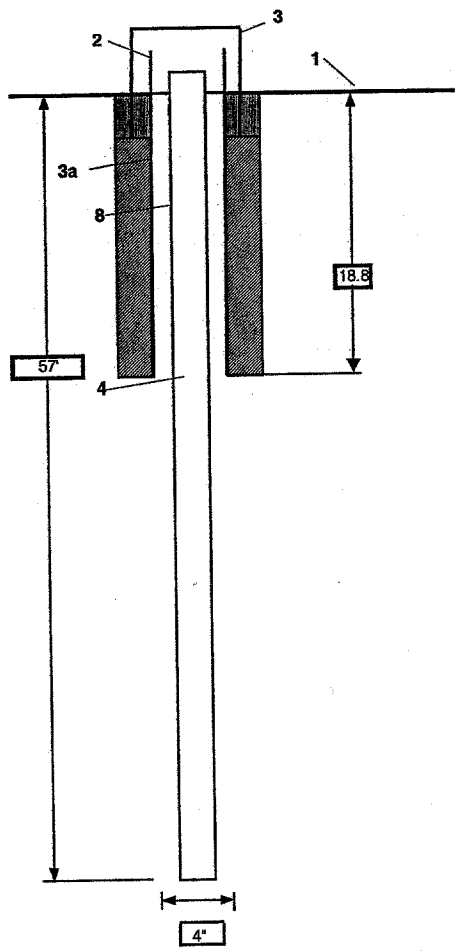

1- Ground elevation at well: 214.0'

2- Top of casing elevation: (inner steel casing)

3- Wellhead protection cover type: 0.5' Stickup
a) Dia./type of outer surface casing: 5" steel
b) concrete pad dimensions: 3 x 3

4- Dia./type of inner well casing: Open borehole with a 3" I.D. Sch 40 PVC placed loosley in hole to keep boring open - no screen.

5- Type/slot size of screen:

6- Type screen filter:

7- Type of seal:
a) Quantity used:

8- Grout
a) Grout mix used: 1 bag Portland + 5 lbs bentonite per 8 gal water
b) Method of placement: Tremmie pipe

PROJECT NUMBER	WELL NUMBER		
180396	09IW03	SHEET 1	OF 1

CH2MHILL

WELL COMPLETION DIAGRAM

PROJECT : White Oak Site 9 Pilot Test
LOCATION : Silver Spring, Maryland
DRILLING METHOD AND EQUIPMENT USED : HSA/Air rotary
DRILLING CONTRACTOR : Groundwater System START : 07/16/03 END : 07/16/2003 GEOLOGIST : C. Brown

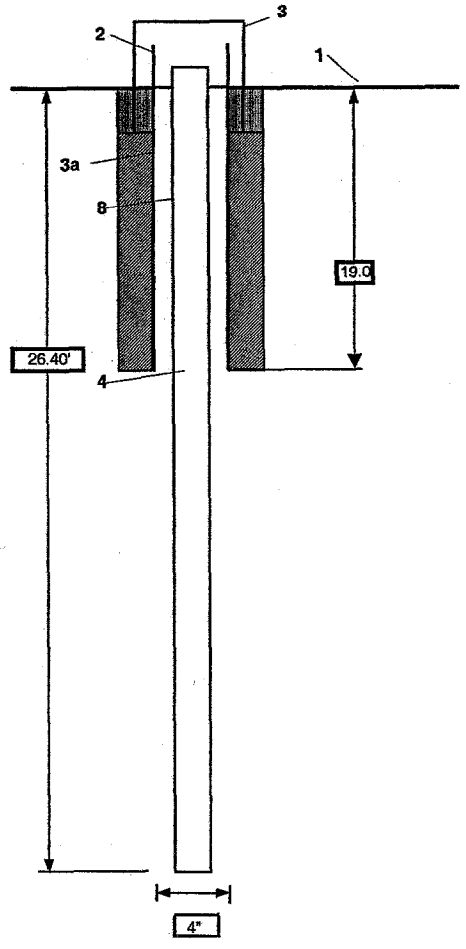

1- Ground elevation at well	213.8'
2- Top of casing elevation	(inner steel casing)
3- Wellhead protection cover type	0.5' Stickup
a) Dia./type of outer surface casing	5" steel
b) concrete pad dimensions	3 x 3
4- Dia./type of inner well casing	Open borehole with a 3" I.D. Sch 40 PVC placed loosely in hole to keep boring open - no screen.
5- Type/slot size of screen	
6- Type screen filter	
7- Type of seal	
a) Quantity used	
8- Grout	
a) Grout mix used	1 bag Portland + 5 lbs bentonite per 8 gal water
b) Method of placement	Tremmie pipe

PROJECT NUMBER	WELL NUMBER		
180396	09IW04	SHEET 1	OF 1

CH2MHILL

WELL COMPLETION DIAGRAM

PROJECT : White Oak Site 9 Pilot Test
LOCATION : Silver Spring, Maryland
DRILLING METHOD AND EQUIPMENT USED : HSA/Air rotary
DRILLING CONTRACTOR : Groundwater System START : 07/16/03 END : 07/16/2003 GEOLOGIST : C. Brown

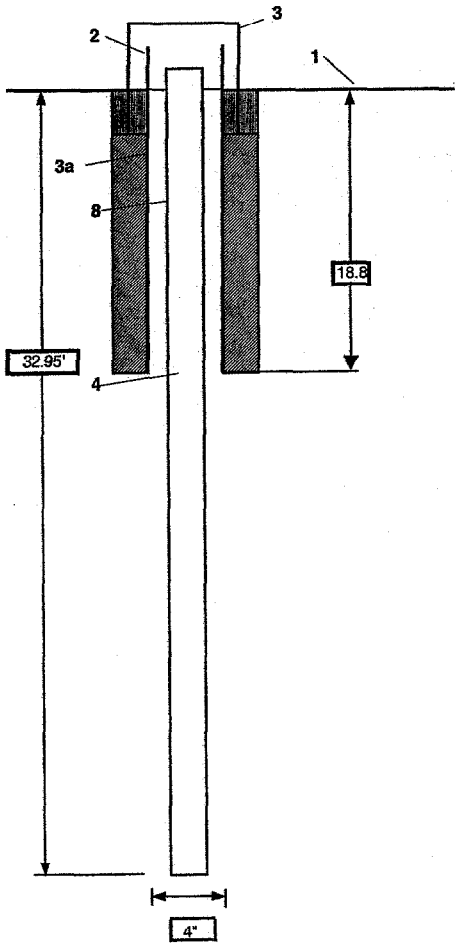

1- Ground elevation at well: 210.4'

2- Top of casing elevation: (inner steel casing)

3- Wellhead protection cover type: 0.5' Stickup
a) Dia./type of outer surface casing: 5" steel
b) concrete pad dimensions: 3 x 3

4- Dia./type of inner well casing: Open borehole with a 3" I.D. Sch 40 PVC placed loosely in hole to keep boring open - no screen.

5- Type/slot size of screen:

6- Type screen filter:

7- Type of seal:
a) Quantity used:

8- Grout
a) Grout mix used: 1 bag Portland + 5 lbs bentonite per 8 gal water
b) Method of placement: Tremmie pipe

PROJECT NUMBER	WELL NUMBER	
180396	09IW05	SHEET 1 OF 1

CH2MHILL

WELL COMPLETION DIAGRAM

PROJECT : White Oak Site 9 Pilot Test
LOCATION : Silver Spring, Maryland
DRILLING METHOD AND EQUIPMENT USED : HSA/Air rotary
DRILLING CONTRACTOR : Groundwater System START : 07/16/03 END : 07/16/2003 GEOLOGIST : C. Brown

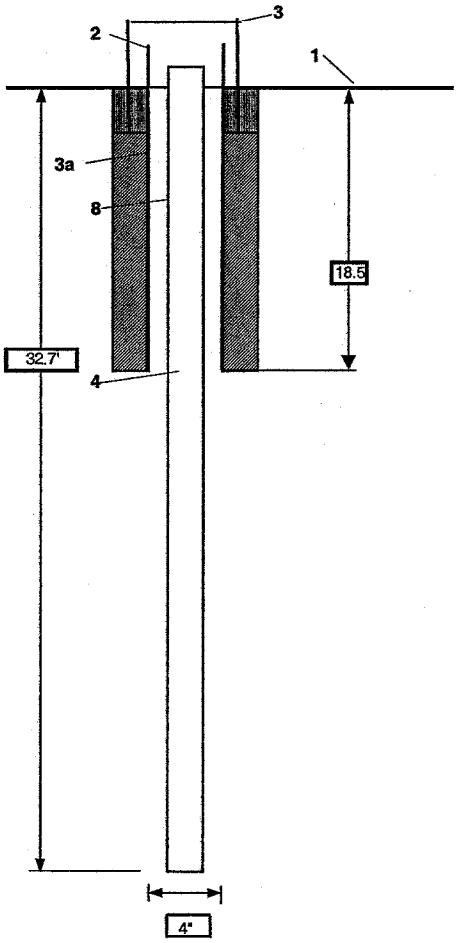

1- Ground elevation at well: 212.6'

2- Top of casing elevation: (inner steel casing)

3- Wellhead protection cover type: 0.5' Stickup
a) Dia./type of outer surface casing: 5" steel
b) concrete pad dimensions: 3 x 3

4- Dia./type of inner well casing: Open borehole with a 3" I.D. Sch 40 PVC placed loosely in hole to keep boring open - no screen

5- Type/slot size of screen:

6- Type screen filter:

7- Type of seal:
a) Quantity used:

8- Grout
a) Grout mix used: 1 bag Portland + 5 lbs bentonite per 8 gal water
b) Method of placement: Tremmie pipe

APPENDIX C

Detected Compounds – Baseline Sampling

Compounds Detected in Groundwater Samples for Site 9 Pilot Test
Baseline (Round 1), June - July, 2003
Former NSWC White Oak, Silver Spring, Maryland

Station ID	09GW01		09GW202		09GW205		09GW206		09GW207				09GW208		09GW209		09GW210	
Sample ID	009GW001PTR1		009GW202PTR1		009GW205PTR1		009GW206PTR1		009GW207PTR1		009GW20799R1		009GW208PTR1		009GW209PTR1		009GW210PTR1	
Sample Date	06/03/03		06/03/03		06/03/03		06/03/03		06/03/03		06/03/03		06/03/03		06/03/03		06/03/03	
Notes									Duplicates									
Chemical Name																		
Volatile Organic Compounds (UG/L)																		
Methylene chloride	0.86	JB	0.76	JB	0.89	JB	0.78	JB	0.83	JB	0.89	JB	0.86	J	0.6	JB	0.69	JB
Tetrachloroethene	1	U	1	U	1	U	1	U	1	U	1	U	1	U	1	U	1	U
Toluene	NA		NA		NA		NA		NA		NA		NA		NA		NA	
Trichloroethene	9		1	U	11		2.6		4.4		4.4		7.2		8.2		1	U
Trichlorofluoromethane(Freon-11)	NA		NA		NA		NA		NA		NA		NA		NA		NA	
cis-1,2-Dichloroethene	1	U	1	U	0.65	J	1	U	1	U	1	U	1	U	1	U	1	U
m- and p-Xylene	NA		NA		NA		NA		NA		NA		NA		NA		NA	
Explosives (UG/L)																		
1,3,5-Trinitrobenzene	0.26	U	0.26	U	0.26	U	0.26	U	0.26	U	0.26	U	0.26	U	0.26	U	NA	
2,4,6-Trinitrotoluene	0.26	U	0.26	U	1.2		0.26	U	1.3		1.1		1.9		1.7		NA	
2,4-Dinitrotoluene	0.26	U	0.26	U	0.26	U	0.26	U	0.1	J	0.26	U	0.26	U	0.26	U	NA	
2,6-Dinitrotoluene	0.26	U	0.26	U	0.26	U	0.26	U	0.35		0.26	U	0.26		0.29		NA	
2-Amino-4,6-dinitrotoluene	0.26	U	0.26	U	0.26	U	0.26	U	0.85		0.76		0.71		0.7		NA	
4-Amino-2,6-dinitrotoluene	0.26	U	0.26	U	0.26	U	0.26	U	1.1		1		1.2		1.3		NA	
HMX	12		0.52	U	14		0.52	U	19		19		14		16		NA	
Perchlorate	160		4.9		180		25		160		160		200		180		NA	
RDX	110		2		96		16		110		100		110		110		NA	
Total Metals (UG/L)																		
Iron	152		NA		573		392		113	B	112	B	909		453		NA	
Sodium	7,970		NA		9,280		5,850		9,130		9,550		6,650		7,200		NA	
Wet Chemistry (MG/L except where noted)																		
Alkalinity	6		NA		14		64		2		3		4		8		NA	
Carbon dioxide	45		NA		68		68		60		66		66		65		NA	
Chloride	15		NA		18		4.4		21		21		15		16		NA	
Ethane	5.00E-06	U	NA		6.80E-04		9.60E-04		1.60E-05		1.70E-05		7.60E-06		2.30E-04		NA	
Ethene	1.20E-05		NA		4.40E-04		2.40E-04		3.70E-05		3.90E-05		4.90E-05		8.20E-05		NA	
Hydrogen (NMOLE/L)	1.8		NA		48,000		55,000		530		500		100		13,000		NA	
Methane	4.00E-05		NA		0.0012		0.0013		6.00E-05		7.00E-05		0.0014		3.80E-04		NA	
Nitrate	0.5		NA		0.56		0.2		0.56		0.56		0.54		0.78		NA	
Sulfate	0.75		NA		1.5		11		1.1		0.54		0.6		0.43		NA	

NA - Not analyzed
B - Analyte not detected above associated blank
G U
J - Reported value is estimated
JB

S
U - Analyte not detected

Compounds Detected in Groundwater Samples for Site 9 Pilot Test
Baseline (Round 1), June - July, 2003
Former NSWC White Oak, Silver Spring, Maryland

Station ID	09GW211		09GW212		09GW213				09GW214	
Sample ID	009GW211PTR1		009GW212PTR1		009GW213PTR1		009GW21399R1		009GW214PTR1	
Sample Date	06/03/03		07/07/03		07/07/03		07/07/03		07/07/03	
Notes			Background		Duplicate					
Chemical Name										
Volatile Organic Compounds (UG/L)										
Methylene chloride	0.65	JB	8.9	JB	3.3	JB	1.8	JB	2.4	JB
Tetrachloroethene	1	U	5	U	1.2	J	5	U	5	U
Toluene	NA		5	U	5	U	1.2	J	5	U
Trichloroethene	0.88	J	5	U	5	U	5	U	2.7	J
Trichlorofluoromethane(Freon-11)	NA		9.7		1.5	J	1.4	J	11	
cis-1,2-Dichloroethene	1	U	5	U	5	U	5	U	5	U
m- and p-Xylene	NA		5	U	5	U	1.3	J	5	U
Explosives (UG/L)										
1,3,5-Trinitrobenzene	0.26	U	0.2	U	11	J	20	U	6	U
2,4,6-Trinitrotoluene	0.26	U	0.2	U	670		520		6.9	
2,4-Dinitrotoluene	0.26	U	0.2	U	20	U	20	U	6	U
2,6-Dinitrotoluene	0.26	U	0.2	U	20	U	20	U	6	U
2-Amino-4,6-dinitrotoluene	0.26	U	0.2	U	36		35		6	U
4-Amino-2,6-dinitrotoluene	0.26	U	0.2	U	110	G U	93	G U	5.7	J
HMX	0.52	U	2.7		550		500		23	
Perchlorate	12		5.5		230		180		250	
RDX	5.8		6.8		87		90		190	
Total Metals (UG/L)										
Iron	1,810		NA		NA		NA		NA	
Sodium	11,500		10,800		7,260		7,280		4,960	
Wet Chemistry (MG/L except where note										
Alkalinity	120		32		3.8		4.7		5.7	
Carbon dioxide	33		NA		NA		NA		NA	
Chloride	5.1		20		9		8.9		8.7	
Ethane	0.0036	S	NA		NA		NA		NA	
Ethene	0.0022	S	NA		NA		NA		NA	
Hydrogen (NMOLE/L)	NA		NA		NA		NA		NA	
Methane	0.013	S	NA		NA		NA		NA	
Nitrate	0.11		0.16		1.2		0.14		0.83	
Sulfate	4.6		11		0.94		0.93		0.43	

NA - Not analyzed
B - Analyte not detected above associated blank
G U
J - Reported value is estimated
JB

S
U - Analyte not detected

Compounds Detected in Direct-Push Groundwater Samples at Building 318 Sump
June 23, 2003
Former NSWC White Oak, Silver Spring Maryland

Station ID	09GW300		09GW301	
Sample ID	009GW300-23		009GW301-23	
Sample Date	06/23/03		06/23/03	
Chemical Name				
Volatile Organic Compounds (UG/L)				
Carbon disulfide	0.63	J	0.9	J
Trichloroethene	1	U	0.54	J
Trichlorofluoromethane(Freon-11)	2.1		2.2	
Explosives (UG/L)				
1,3,5-Trinitrobenzene	0.26	U	7.9	
2,4,6-Trinitrotoluene	130		720	
2,4-Dinitrotoluene	2.5		4.6	
2,6-Dinitrotoluene	0.26	U	0.96	
2-Amino-4,6-dinitrotoluene	37		45	
4-Amino-2,6-dinitrotoluene	19		35	
HMX	200		370	
Perchlorate	210		190	
RDX	46		64	

NA - Not analyzed
J - Reported value is estimated
U - Analyte not detected

Compounds Detected in Subsurface Soil Samples at Building 318 Sump
June 23, 2003
Former NSWC White Oak, Silver Spring, Maryland

Station ID	09SB300				09SB301			
Sample ID	009SB300-06		009SB300-13		009SB301-06		009SB301-15	
Sample Date	06/23/03		06/23/03		06/23/03		06/23/03	
Sample Depth (feet below ground surface)	6		13		6		13	
Chemical Name								
Volatile Organic Compounds (UG/KG)								
1,1,2-Trichloro-1,2,2-trifluoroethane(Freon-113)	5.2	U	1.3	J	4.8	U	5.4	U
Explosives (UG/KG)								
1,3,5-Trinitrobenzene	100	U	140		580		72	J
2,4,6-Trinitrotoluene	74	J	170		1,500		1,200	
2,4-Dinitrotoluene	100	U	100	U	100	U	89	J
2,6-Dinitrotoluene	100	U	100	U	100	U	150	
2-Amino-4,6-dinitrotoluene	100	U	100	U	67	J	150	
4-Amino-2,6-dinitrotoluene	100	U	100	U	150		140	
HMX	10,000		79	J	180	J	180	J
Nitrobenzene	100	U	100	U	45	J	100	U
Perchlorate	1,400		11		40		15	
RDX	1,200		200	U	200	U	200	U
Other								
% Solids	82		86		86		81	

NA - Not analyzed
J - Reported value is estimated
U - Analyte not detected

APPENDIX D

Complete Data Set – Baseline Sampling Event

Complete Results from Groundwater Samples for Site 9 Pilot Test
Baseline (Round 1), June - July, 2003
Former NSWC White Oak, Silver Spring, Maryland

Station ID	09GW01		09GW202		09GW205		09GW206		09GW207		09GW207		09GW208		09GW209		09GW210	
Sample ID	009GW001PTR1		009GW202PTR1		009GW205PTR1		009GW206PTR1		009GW207PTR1		009GW20799R1		009GW208PTR1		009GW209PTR1		009GW210PTR1	
Sample Date	06/03/03		06/03/03		06/03/03		06/03/03		06/03/03		06/03/03		06/03/03		06/03/03		06/03/03	
Notes									Duplicates									
Chemical Name																		
Volatile Organic Compounds (UG/L)																		
1,1,1,2-Tetrachloroethane	1	U	1	U	1	U	1	U	1	U	1	U	1	U	1	U	1	U
1,1,1-Trichloroethane	1	U	1	U	1	U	1	U	1	U	1	U	1	U	1	U	1	U
1,1,2,2-Tetrachloroethane	1	U	1	U	1	U	1	U	1	U	1	U	1	U	1	U	1	U
1,1,2-Trichloro-1,2,2-trifluoroethane(Freon-113)	NA		NA		NA		NA		NA		NA		NA		NA		NA	
1,1,2-Trichloroethane	1	U	1	U	1	U	1	U	1	U	1	U	1	U	1	U	1	U
1,1-Dichloroethane	1	U	1	U	1	U	1	U	1	U	1	U	1	U	1	U	1	U
1,1-Dichloroethene	1	U	1	U	1	U	1	U	1	U	1	U	1	U	1	U	1	U
1,2,4-Trichlorobenzene	NA		NA		NA		NA		NA		NA		NA		NA		NA	
1,2-Dibromo-3-chloropropane	NA		NA		NA		NA		NA		NA		NA		NA		NA	
1,2-Dibromoethane	NA		NA		NA		NA		NA		NA		NA		NA		NA	
1,2-Dichlorobenzene	NA		NA		NA		NA		NA		NA		NA		NA		NA	
1,2-Dichloroethane	1	U	1	U	1	U	1	U	1	U	1	U	1	U	1	U	1	U
1,2-Dichloropropane	NA		NA		NA		NA		NA		NA		NA		NA		NA	
1,3-Dichlorobenzene	NA		NA		NA		NA		NA		NA		NA		NA		NA	
1,4-Dichlorobenzene	NA		NA		NA		NA		NA		NA		NA		NA		NA	
2-Butanone	NA		NA		NA		NA		NA		NA		NA		NA		NA	
2-Hexanone	NA		NA		NA		NA		NA		NA		NA		NA		NA	
4-Methyl-2-pentanone	NA		NA		NA		NA		NA		NA		NA		NA		NA	
Acetone	NA		NA		NA		NA		NA		NA		NA		NA		NA	
Benzene	NA		NA		NA		NA		NA		NA		NA		NA		NA	
Bromodichloromethane	NA		NA		NA		NA		NA		NA		NA		NA		NA	
Bromoform	NA		NA		NA		NA		NA		NA		NA		NA		NA	
Bromomethane	NA		NA		NA		NA		NA		NA		NA		NA		NA	
Carbon disulfide	NA		NA		NA		NA		NA		NA		NA		NA		NA	
Carbon tetrachloride	NA		NA		NA		NA		NA		NA		NA		NA		NA	
Chlorobenzene	NA		NA		NA		NA		NA		NA		NA		NA		NA	
Chloroethane	1	U	1	U	1	U	1	U	1	U	1	U	1	U	1	U	1	U
Chloroform	NA		NA		NA		NA		NA		NA		NA		NA		NA	
Chloromethane	1	U	1	U	1	U	1	U	1	U	1	U	1	U	1	U	1	U
Cumene	NA		NA		NA		NA		NA		NA		NA		NA		NA	
Cyclohexane	NA		NA		NA		NA		NA		NA		NA		NA		NA	
Dibromochloromethane	NA		NA		NA		NA		NA		NA		NA		NA		NA	
Dichlorodifluoromethane(Freon-12)	NA		NA		NA		NA		NA		NA		NA		NA		NA	
Ethylbenzene	NA		NA		NA		NA		NA		NA		NA		NA		NA	
Methyl acetate	NA		NA		NA		NA		NA		NA		NA		NA		NA	
Methyl-tert-butyl ether (MTBE)	NA		NA		NA		NA		NA		NA		NA		NA		NA	

NA - Not analyzed
B - Analyte not detected above associated blank
G U
J - Reported value is estimated
JB

S
U - Analyte not detected

Complete Results from Groundwater Samples for Site 9 Pilot Test
Baseline (Round 1), June - July, 2003
Former NSWC White Oak, Silver Spring, Maryland

Station ID	09GW01		09GW202		09GW205		09GW206		09GW207		09GW207		09GW208		09GW209		09GW210	
Sample ID	009GW001PTR1		009GW202PTR1		009GW205PTR1		009GW206PTR1		009GW207PTR1		009GW20799R1		009GW208PTR1		009GW209PTR1		009GW210PTR1	
Sample Date	06/03/03		06/03/03		06/03/03		06/03/03		06/03/03		06/03/03		06/03/03		06/03/03		06/03/03	
Notes									Duplicates									
Chemical Name																		
Methylcyclohexane	NA		NA		NA		NA		NA		NA		NA		NA		NA	
Methylene chloride	0.86	JB	0.76	JB	0.89	JB	0.78	JB	0.83	JB	0.89	JB	0.86	J	0.6	JB	0.69	JB
Styrene	NA		NA		NA		NA		NA		NA		NA		NA		NA	
Tetrachloroethene	1	U	1	U	1	U	1	U	1	U	1	U	1	U	1	U	1	U
Toluene	NA		NA		NA		NA		NA		NA		NA		NA		NA	
Trichloroethene	9		1	U	11		2.6		4.4		4.4		7.2		8.2		1	U
Trichlorofluoromethane(Freon-11)	NA		NA		NA		NA		NA		NA		NA		NA		NA	
Vinyl chloride	1	U	1	U	1	U	1	U	1	U	1	U	1	U	1	U	1	U
cis-1,2-Dichloroethene	1	U	1	U	0.65	J	1	U	1	U	1	U	1	U	1	U	1	U
cis-1,3-Dichloropropene	NA		NA		NA		NA		NA		NA		NA		NA		NA	
m- and p-Xylene	NA		NA		NA		NA		NA		NA		NA		NA		NA	
o-Xylene	NA		NA		NA		NA		NA		NA		NA		NA		NA	
trans-1,2-Dichloroethene	1	U	1	U	1	U	1	U	1	U	1	U	1	U	1	U	1	U
trans-1,3-Dichloropropene	NA		NA		NA		NA		NA		NA		NA		NA		NA	
Explosives (UG/L)																		
1,3,5-Trinitrobenzene	0.26	U	0.26	U	0.26	U	0.26	U	0.26	U	0.26	U	0.26	U	0.26	U	NA	
1,3-Dinitrobenzene	0.26	U	0.26	U	0.26	U	0.26	U	0.26	U	0.26	U	0.26	U	0.26	U	NA	
2,4,6-Trinitrotoluene	0.26	U	0.26	U	1.2		0.26	U	1.3		1.1		1.9		1.7		NA	
2,4-Dinitrotoluene	0.26	U	0.26	U	0.26	U	0.26	U	0.1	J	0.26	U	0.26	U	0.26	U	NA	
2,6-Dinitrotoluene	0.26	U	0.26	U	0.26	U	0.26	U	0.35		0.26	U	0.26		0.29		NA	
2-Amino-4,6-dinitrotoluene	0.26	U	0.26	U	0.26	U	0.26	U	0.85		0.76		0.71		0.7		NA	
2-Nitrotoluene	0.52	U	0.52	U	0.52	U	0.52	U	0.52	U	0.52	U	0.52	U	0.52	U	NA	
3-Nitrotoluene	0.52	U	0.52	U	0.52	U	0.52	U	0.52	U	0.52	U	0.52	U	0.52	U	NA	
4-Amino-2,6-dinitrotoluene	0.26	U	0.26	U	0.26	U	0.26	U	1.1		1		1.2		1.3		NA	
4-Nitrotoluene	0.52	U	0.52	U	0.52	U	0.52	U	0.52	U	0.52	U	0.52	U	0.52	U	NA	
HMX	12		0.52	U	14		0.52	U	19		19		14		16		NA	
Nitrobenzene	0.26	U	0.26	U	0.26	U	0.26	U	0.26	U	0.26	U	0.26	U	0.26	U	NA	
Perchlorate	160		4.9		180		25		160		160		200		180		NA	
RDX	110		2		96		16		110		100		110		110		NA	
Tetryl	0.52	U	0.52	U	0.52	U	0.52	U	0.52	U	0.52	U	0.52	U	0.52	U	NA	
Total Metals (UG/L)																		
Iron	152		NA		573		392		113	B	112	B	909		453		NA	
Sodium	7,970		NA		9,280		5,850		9,130		9,550		6,650		7,200		NA	

NA - Not analyzed
B - Analyte not detected above associated blank
G U
J - Reported value is estimated
JB

S
U - Analyte not detected

Complete Results from Groundwater Samples for Site 9 Pilot Test
Baseline (Round 1), June - July, 2003
Former NSWC White Oak, Silver Spring, Maryland

Station ID	09GW01		09GW202		09GW205		09GW206		09GW207		09GW207		09GW208		09GW209		09GW210	
Sample ID	009GW001PTR1		009GW202PTR1		009GW205PTR1		009GW206PTR1		009GW207PTR1		009GW20799R1		009GW208PTR1		009GW209PTR1		009GW210PTR1	
Sample Date	06/03/03		06/03/03		06/03/03		06/03/03		06/03/03		06/03/03		06/03/03		06/03/03		06/03/03	
Notes									Duplicates									
Chemical Name																		
Wet Chemistry (MG/L except where noted)																		
Acetate	1	U	NA		1	U	1	U	1	U	1	U	1	U	1	U	NA	
Alkalinity	6		NA		14		64		2		3		4		8		NA	
Butyrate	1	U	NA		1	U	1	U	1	U	1	U	1	U	1	U	NA	
Carbon dioxide	45		NA		68		68		60		66		66		65		NA	
Chemical oxygen demand	5	U	5	U	5	U	5	U	5	U	5	U	5	U	5	U	NA	
Chloride	15		NA		18		4.4		21		21		15		16		NA	
Ethane	5.00E-06	U	NA		6.80E-04		9.60E-04		1.60E-05		1.70E-05		7.60E-06		2.30E-04		NA	
Ethene	1.20E-05		NA		4.40E-04		2.40E-04		3.70E-05		3.90E-05		4.90E-05		8.20E-05		NA	
Ferrous iron	0.5	U	NA		0.5	U	0.5	U	0.5	U	0.5	U	0.5	U	0.5	U	NA	
Hydrogen (NMOLE/L)	1.8		NA		48,000		55,000		530		500		100		13,000		NA	
Lactate	25	U	NA		25	U	25	U	25	U	25	U	25	U	25	U	NA	
Methane	4.00E-05		NA		0.0012		0.0013		6.00E-05		7.00E-05		0.0014		3.80E-04		NA	
Nitrate	0.5		NA		0.56		0.2		0.56		0.56		0.54		0.78		NA	
Propionate	1	U	NA		1	U	1	U	1	U	1	U	1	U	1	U	NA	
Pyruvate	10	U	NA		10	U	10	U	10	U	10	U	10	U	10	U	NA	
Sulfate	0.75		NA		1.5		11		1.1		0.54		0.6		0.43		NA	
Sulfide	2	U	NA		2	U	2	U	2	U	2	U	2	U	2	U	NA	

NA - Not analyzed
B - Analyte not detected above associated blank
G U
J - Reported value is estimated
JB

S
U - Analyte not detected

Complete Results from Groundwater Samples for Site 9 Pilot Test
Baseline (Round 1), June - July, 2003
Former NSWC White Oak, Silver Spring, Maryland

Station ID	09GW211		09GW212		09GW213		09GW213		09GW214	
Sample ID	009GW211PTR1		009GW212PTR1		009GW213PTR1		009GW21399R1		009GW214PTR1	
Sample Date	06/03/03		07/07/03		07/07/03		07/07/03		07/07/03	
Notes			Background		Duplicates					
Chemical Name										
Volatile Organic Compounds (UG/L)										
1,1,1,2-Tetrachloroethane	1	U	NA		NA		NA		NA	
1,1,1-Trichloroethane	1	U	5	U	5	U	5	U	5	U
1,1,2,2-Tetrachloroethane	1	U	5	U	5	U	5	U	5	U
1,1,2-Trichloro-1,2,2-trifluoroethane(Freon-113)	NA		5	U	5	U	5	U	5	U
1,1,2-Trichloroethane	1	U	5	U	5	U	5	U	5	U
1,1-Dichloroethane	1	U	5	U	5	U	5	U	5	U
1,1-Dichloroethene	1	U	5	U	5	U	5	U	5	U
1,2,4-Trichlorobenzene	NA		5	U	5	U	5	U	5	U
1,2-Dibromo-3-chloropropane	NA		5	U	5	U	5	U	5	U
1,2-Dibromoethane	NA		5	U	5	U	5	U	5	U
1,2-Dichlorobenzene	NA		5	U	5	U	5	U	5	U
1,2-Dichloroethane	1	U	5	U	5	U	5	U	5	U
1,2-Dichloropropane	NA		5	U	5	U	5	U	5	U
1,3-Dichlorobenzene	NA		5	U	5	U	5	U	5	U
1,4-Dichlorobenzene	NA		5	U	5	U	5	U	5	U
2-Butanone	NA		10	U	10	U	10	U	10	U
2-Hexanone	NA		10	U	10	U	10	U	10	U
4-Methyl-2-pentanone	NA		10	U	10	U	10	U	10	U
Acetone	NA		10	U	10	U	3	JB	10	U
Benzene	NA		5	U	5	U	5	U	5	U
Bromodichloromethane	NA		5	U	5	U	5	U	5	U
Bromoform	NA		5	U	5	U	5	U	5	U
Bromomethane	NA		10	U	10	U	10	U	10	U
Carbon disulfide	NA		5	U	5	U	5	U	5	U
Carbon tetrachloride	NA		5	U	5	U	5	U	5	U
Chlorobenzene	NA		5	U	5	U	5	U	5	U
Chloroethane	1	U	10	U	10	U	10	U	10	U
Chloroform	NA		5	U	5	U	5	U	5	U
Chloromethane	1	U	10	U	10	U	10	U	10	U
Cumene	NA		5	U	5	U	5	U	5	U
Cyclohexane	NA		5	U	5	U	5	U	5	U
Dibromochloromethane	NA		5	U	5	U	5	U	5	U
Dichlorodifluoromethane(Freon-12)	NA		5	U	5	U	5	U	5	U
Ethylbenzene	NA		5	U	5	U	5	U	5	U
Methyl acetate	NA		5	U	5	U	5	U	5	U
Methyl-tert-butyl ether (MTBE)	NA		5	U	5	U	5	U	5	U

NA - Not analyzed
B - Analyte not detected above associated blank
G U
J - Reported value is estimated
JB

S
U - Analyte not detected

Complete Results from Groundwater Samples for Site 9 Pilot Test
Baseline (Round 1), June - July, 2003
Former NSWC White Oak, Silver Spring, Maryland

Station ID	09GW211		09GW212		09GW213		09GW213		09GW214	
Sample ID	009GW211PTR1		009GW212PTR1		009GW213PTR1		009GW21399R1		009GW214PTR1	
Sample Date	06/03/03		07/07/03		07/07/03		07/07/03		07/07/03	
Notes			Background		Duplicates					
Chemical Name										
Methylcyclohexane	NA		5	U	5	U	5	U	5	U
Methylene chloride	0.65	JB	8.9	JB	3.3	JB	1.8	JB	2.4	JB
Styrene	NA		5	U	5	U	5	U	5	U
Tetrachloroethene	1	U	5	U	1.2	J	5	U	5	U
Toluene	NA		5	U	5	U	1.2	J	5	U
Trichloroethene	0.88	J	5	U	5	U	5	U	2.7	J
Trichlorofluoromethane(Freon-11)	NA		9.7		1.5	J	1.4	J	11	
Vinyl chloride	1	U	10	U	10	U	10	U	10	U
cis-1,2-Dichloroethene	1	U	5	U	5	U	5	U	5	U
cis-1,3-Dichloropropene	NA		5	U	5	U	5	U	5	U
m- and p-Xylene	NA		5	U	5	U	1.3	J	5	U
o-Xylene	NA		5	U	5	U	5	U	5	U
trans-1,2-Dichloroethene	1	U	5	U	5	U	5	U	5	U
trans-1,3-Dichloropropene	NA		5	U	5	U	5	U	5	U
Explosives (UG/L)										
1,3,5-Trinitrobenzene	0.26	U	0.2	U	11	J	20	U	6	U
1,3-Dinitrobenzene	0.26	U	0.2	U	20	U	20	U	6	U
2,4,6-Trinitrotoluene	0.26	U	0.2	U	670		520		6.9	
2,4-Dinitrotoluene	0.26	U	0.2	U	20	U	20	U	6	U
2,6-Dinitrotoluene	0.26	U	0.2	U	20	U	20	U	6	U
2-Amino-4,6-dinitrotoluene	0.26	U	0.2	U	36		35		6	U
2-Nitrotoluene	0.52	U	0.2	U	20	U	20	U	6	U
3-Nitrotoluene	0.52	U	0.2	U	20	U	20	U	6	U
4-Amino-2,6-dinitrotoluene	0.26	U	0.2	U	110	G U	93	G U	5.7	J
4-Nitrotoluene	0.52	U	0.24	G U	20	U	20	U	6	U
HMX	0.52	U	2.7		550		500		23	
Nitrobenzene	0.26	U	0.2	U	20	U	20	U	6	U
Perchlorate	12		5.5		230		180		250	
RDX	5.8		6.8		87		90		190	
Tetryl	0.52	U	0.2	U	20	U	20	U	6	U
Total Metals (UG/L)										
Iron	1,810		NA		NA		NA		NA	
Sodium	11,500		10,800		7,260		7,280		4,960	

NA - Not analyzed
B - Analyte not detected above associated blank
G U
J - Reported value is estimated
JB

S
U - Analyte not detected

Complete Results from Groundwater Samples for Site 9 Pilot Test
Baseline (Round 1), June - July, 2003
Former NSWC White Oak, Silver Spring, Maryland

Station ID	09GW211		09GW212		09GW213		09GW213		09GW214	
Sample ID	009GW211PTR1		009GW212PTR1		009GW213PTR1		009GW21399R1		009GW214PTR1	
Sample Date	06/03/03		07/07/03		07/07/03		07/07/03		07/07/03	
Notes			Background		Duplicates					
Chemical Name										
Wet Chemistry (MG/L except where noted)										
Acetate	1	U	NA		NA		NA		NA	
Alkalinity	120		32		3.8		4.7		5.7	
Butyrate	1	U	NA		NA		NA		NA	
Carbon dioxide	33		NA		NA		NA		NA	
Chemical oxygen demand	5	U	5	U	5	U	5	U	5	U
Chloride	5.1		20		9		8.9		8.7	
Ethane	0.0036	S	NA		NA		NA		NA	
Ethene	0.0022	S	NA		NA		NA		NA	
Ferrous iron	0.5	U	5.00E-04	U	5.00E-04	U	5.00E-04	U	5.00E-04	U
Hydrogen (NMOLE/L)	NA		NA		NA		NA		NA	
Lactate	25	U	NA		NA		NA		NA	
Methane	0.013	S	NA		NA		NA		NA	
Nitrate	0.11		0.16		1.2		0.14		0.83	
Propionate	1	U	NA		NA		NA		NA	
Pyruvate	10	U	NA		NA		NA		NA	
Sulfate	4.6		11		0.94		0.93		0.43	
Sulfide	2	U	2	U	2	U	2	U	2	U

NA - Not analyzed
B - Analyte not detected above associated blank
G U
J - Reported value is estimated
JB

S
U - Analyte not detected

Complete Results from Direct Push Groundwater Samples at Building 318 Sump
June 23, 2003
Former NSWC White Oak, Silver Spring Maryland

Station ID	09GW300		09GW301	
Sample ID	009GW300-23		009GW301-23	
Sample Date	06/23/03		06/23/03	
Chemical Name				
Volatile Organic Compounds (UG/L)				
1,1,1,2-Tetrachloroethane	1	U	1	U
1,1,1-Trichloroethane	1	U	1	U
1,1,2,2-Tetrachloroethane	1	U	1	U
1,1,2-Trichloro-1,2,2-trifluoroethane(Freon-113)	1	U	1	U
1,1,2-Trichloroethane	1	U	1	U
1,1-Dichloroethane	1	U	1	U
1,1-Dichloroethene	1	U	1	U
1,2,4-Trichlorobenzene	1	U	1	U
1,2-Dibromo-3-chloropropane	1	U	1	U
1,2-Dibromoethane	1	U	1	U
1,2-Dichlorobenzene	1	U	1	U
1,2-Dichloroethane	1	U	1	U
1,2-Dichloropropane	1	U	1	U
1,3-Dichlorobenzene	1	U	1	U
1,4-Dichlorobenzene	1	U	1	U
2-Butanone	5	U	5	U
2-Hexanone	5	U	5	U
4-Methyl-2-pentanone	5	U	5	U
Acetone	4.7	JB	3.3	JB
Benzene	1	U	1	U
Bromodichloromethane	1	U	1	U
Bromoform	1	U	1	U
Bromomethane	1	U	1	U
Carbon disulfide	0.63	J	0.9	J
Carbon tetrachloride	1	U	1	U
Chlorobenzene	1	U	1	U
Chloroethane	1	U	1	U
Chloroform	1	U	1	U
Chloromethane	1	U	1	U
Cumene	1	U	1	U
Dibromochloromethane	1	U	1	U
Dichlorodifluoromethane(Freon-12)	1	U	1	U
Ethylbenzene	1	U	1	U
Methyl acetate	1	U	1	U
Methyl-tert-butyl ether (MTBE)	1	U	1	U
Methylcyclohexane	1	U	1	U
Methylene chloride	1	U	1	U
Styrene	1	U	1	U
Tetrachloroethene	1	U	1	U
Toluene	1	U	1	U
Trichloroethene	1	U	0.54	J
Trichlorofluoromethane(Freon-11)	2.1		2.2	
Vinyl chloride	1	U	1	U
cis-1,2-Dichloroethene	1	U	1	U
cis-1,3-Dichloropropene	1	U	1	U
m- and p-Xylene	1	U	1	U
o-Xylene	1	U	1	U
trans-1,2-Dichloroethene	1	U	1	U
trans-1,3-Dichloropropene	1	U	1	U

NA - Not analyzed
J - Reported value is estimated
JB
U - Analyte not detected

Complete Results from Direct Push Groundwater Samples at Building 318 Sump
June 23, 2003
Former NSWC White Oak, Silver Spring Maryland

Station ID	09GW300		09GW301	
Sample ID	009GW300-23		009GW301-23	
Sample Date	06/23/03		06/23/03	
Chemical Name				
Explosives (UG/L)				
1,3,5-Trinitrobenzene	0.26	U	7.9	
1,3-Dinitrobenzene	0.26	U	0.26	U
2,4,6-Trinitrotoluene	130		720	
2,4-Dinitrotoluene	2.5		4.6	
2,6-Dinitrotoluene	0.26	U	0.96	
2-Amino-4,6-dinitrotoluene	37		45	
2-Nitrotoluene	0.52	U	0.52	U
3-Nitrotoluene	0.52	U	0.52	U
4-Amino-2,6-dinitrotoluene	19		35	
4-Nitrotoluene	0.52	U	0.52	U
HMX	200		370	
Nitrobenzene	0.26	U	0.26	U
Perchlorate	210		190	
RDX	46		64	
Tetryl	0.52	U	0.52	U

NA - Not analyzed
J - Reported value is estimated
JB
U - Analyte not detected

Complete Results from Subsurface Soil Samples at Building 318 Sump
June 23, 2003
Former NSWC White Oak, Silver Spring, Maryland

Station ID	09SB300				09SB301			
Sample ID	009SB300-06		009SB300-13		009SB301-06		009SB301-15	
Sample Date	06/23/03		06/23/03		06/23/03		06/23/03	
Sample Depth (feet below ground surface)	6		13		6		13	
Chemical Name								
Volatile Organic Compounds (UG/KG)								
1,1,1-Trichloroethane	5.2	U	5.1	U	4.8	U	5.4	U
1,1,2,2-Tetrachloroethane	5.2	U	5.1	U	4.8	U	5.4	U
1,1,2-Trichloro-1,2,2-trifluoroethane(Freon-113)	5.2	U	1.3	J	4.8	U	5.4	U
1,1,2-Trichloroethane	5.2	U	5.1	U	4.8	U	5.4	U
1,1-Dichloroethane	5.2	U	5.1	U	4.8	U	5.4	U
1,1-Dichloroethene	5.2	U	5.1	U	4.8	U	5.4	U
1,2,4-Trichlorobenzene	5.2	U	5.1	U	4.8	U	5.4	U
1,2-Dibromo-3-chloropropane	5.2	U	5.1	U	4.8	U	5.4	U
1,2-Dibromoethane	5.2	U	5.1	U	4.8	U	5.4	U
1,2-Dichlorobenzene	5.2	U	5.1	U	4.8	U	5.4	U
1,2-Dichloroethane	5.2	U	5.1	U	4.8	U	5.4	U
1,2-Dichloropropane	5.2	U	5.1	U	4.8	U	5.4	U
1,3-Dichlorobenzene	5.2	U	5.1	U	4.8	U	5.4	U
1,4-Dichlorobenzene	5.2	U	5.1	U	4.8	U	5.4	U
2-Butanone	10	U	10	U	9.6	U	11	U
2-Hexanone	10	U	10	U	9.6	U	11	U
4-Methyl-2-pentanone	10	U	10	U	9.6	U	11	U
Acetone	10	U	10	U	9.6	U	11	U
Benzene	5.2	U	5.1	U	4.8	U	5.4	U
Bromodichloromethane	5.2	U	5.1	U	4.8	U	5.4	U
Bromoform	5.2	U	5.1	U	4.8	U	5.4	U
Bromomethane	10	U	10	U	9.6	U	11	U
Carbon disulfide	5.2	U	5.1	U	4.8	U	5.4	U
Carbon tetrachloride	5.2	U	5.1	U	4.8	U	5.4	U
Chlorobenzene	5.2	U	5.1	U	4.8	U	5.4	U
Chloroethane	10	U	10	U	9.6	U	11	U
Chloroform	5.2	U	5.1	U	4.8	U	5.4	U
Chloromethane	10	U	10	U	9.6	U	11	U
Cumene	5.2	U	5.1	U	4.8	U	5.4	U
Cyclohexane	5.2	U	5.2	U	4.8	U	5.4	U
Dibromochloromethane	5.2	U	5.1	U	4.8	U	5.4	U
Dichlorodifluoromethane(Freon-12)	5.2	U	5.1	U	4.8	U	5.4	U
Ethylbenzene	5.2	U	5.1	U	4.8	U	5.4	U
Methyl acetate	5.2	U	5.2	U	4.8	U	5.4	U
Methyl-tert-butyl ether (MTBE)	5.2	U	5.1	U	4.8	U	5.4	U
Methylcyclohexane	5.2	U	5.2	U	4.8	U	5.4	U
Methylene chloride	15	B	15	B	11	B	13	B
Styrene	5.2	U	5.1	U	4.8	U	5.4	U
Tetrachloroethene	5.2	U	5.1	U	4.8	U	5.4	U
Toluene	5.2	U	5.1	U	4.8	U	5.4	U
Trichloroethene	5.2	U	5.1	U	4.8	U	5.4	U
Trichlorofluoromethane(Freon-11)	5.2	U	5.1	U	4.8	U	5.4	U
Vinyl chloride	10	U	10	U	9.6	U	11	U
cis-1,2-Dichloroethene	5.2	U	5.1	U	4.8	U	5.4	U
cis-1,3-Dichloropropene	5.2	U	5.1	U	4.8	U	5.4	U
m- and p-Xylene	5.2	U	5.1	U	4.8	U	5.4	U
o-Xylene	5.2	U	5.1	U	4.8	U	5.4	U
trans-1,2-Dichloroethene	5.2	U	5.1	U	4.8	U	5.4	U

NA - Not analyzed
B - Analyte not detected above associated blank
J - Reported value is estimated
U - Analyte not detected

Complete Results from Subsurface Soil Samples at Building 318 Sump
June 23, 2003
Former NSWC White Oak, Silver Spring, Maryland

Station ID	09SB300				09SB301			
Sample ID	009SB300-06		009SB300-13		009SB301-06		009SB301-15	
Sample Date	06/23/03		06/23/03		06/23/03		06/23/03	
Sample Depth (feet below ground surface)	6		13		6		13	
Chemical Name								
trans-1,3-Dichloropropene	5.2	U	5.1	U	4.8	U	5.4	U
Explosives (UG/KG)								
1,3,5-Trinitrobenzene	100	U	140		580		72	J
1,3-Dinitrobenzene	100	U	100	U	100	U	100	U
2,4,6-Trinitrotoluene	74	J	170		1,500		1,200	
2,4-Dinitrotoluene	100	U	100	U	100	U	89	J
2,6-Dinitrotoluene	100	U	100	U	100	U	150	
2-Amino-4,6-dinitrotoluene	100	U	100	U	67	J	150	
2-Nitrotoluene	200	U	200	U	200	U	200	U
3-Nitrotoluene	200	U	200	U	200	U	200	U
4-Amino-2,6-dinitrotoluene	100	U	100	U	150		140	
4-Nitrotoluene	200	U	200	U	200	U	200	U
HMX	10,000		79	J	180	J	180	J
Nitrobenzene	100	U	100	U	45	J	100	U
Perchlorate	1,400		11		40		15	
RDX	1,200		200	U	200	U	200	U
Tetryl	200	U	200	U	200	U	200	U
Other								
% Solids	82		86		86		81	

NA - Not analyzed
B - Analyte not detected above associated blank
J - Reported value is estimated
U - Analyte not detected

APPENDIX E

ARS Report

ARS TECHNOLOGIES, INC.

BREAKING NEW GROUND IN ENVIRONMENTAL TECHNOLOGY

FIELD SUMMARY

Pneumatic Fracturing and Liquid Atomized Injection of Sodium Lactate to Enhance Bioremediation of TCE and RDX

Area 300, OU-1, Site 9
NSWC White Oak, Silver Spring, Maryland

Submitted to:

CH2M HILL
13921 Park Center Road
Suite 600
Herndon, VA 20171

Prepared by:

ARS Technologies, Inc.
114 North Ward Street
New Brunswick, NJ 08901

September 3, 2003

Table of Contents

1.0 INTRODUCTION **2**

2.0 TECHNOLOGY DEMONSTRATION SCOPE **2**

3.0 SITE DESCRIPTION AND LAYOUT **2**

3.1 Geology/Hydrogeology 2
3.2 Injection Wells Installation and Layout 3

4.0 OVERVIEW OF FIELD INJECTION PROCESSES AND PARAMETERS **3**

5.0 SUMMARY OF FIELD ACTIVITIES **5**

5.1 PF and LAI Injections 5
5.1.1 PF at IW1 ..... *5*
5.1.2 PF and LAI at IW3 ..... *6*
5.1.3 LAI at IW1 ..... *7*
5.1.4 PF and LAI at IW2 ..... *7*
5.1.5 PF and LAI at IW4 ..... *8*
5.1.6 PF and LAI at IW5 ..... *9*
5.2 Sodium Lactate Mixing Operations 10
5.2.1 Batch 1 ..... *10*
5.2.2 Batch 2 ..... *10*

6.0 CONCLUSIONS **11**

Figures

Figure 1- Location of injection and monitoring wells.

Tables

Table 1- Summary of Sodium Lactate Injection Parameters

Appendix

Appendix A- Pressure response, surface heave and initiation/maintenance pressures for LAI and PF activities.

Appendix B- Pressure verses time history for PF activities.

1.0 INTRODUCTION

This document summarizes the results and field operational parameters of a Pneumatic Fracturing (PF) and Liquid Atomized Injection (LAI) demonstration conducted for CH2M HILL (HILL) at the former Navel Surface Warfare Center (NSWC) at White Oak, Silver Spring, Maryland from July 21 through 26, 2003. ARS Technologies performed the demonstration under HILL subcontract number N62470-95-D-6007.

The primary objectives of the pilot study was 1) evaluate the effectiveness of PF/LAI on sodium lactate distribution and 2) determine if in-situ anaerobic bioremediation using sodium lactate can permanently reduce concentrations of perchlorate, trichlorothene (TCE) and the explosives compound hexahydro-1,3,5-trinitro-1,3,5-triazine (RDX) to levels below preliminary remediation goals (PRGs) within the ground water.

2.0 TECHNOLOGY DEMONSTRATION SCOPE

CH2M HILL's July 10, 2003 document entitled "Scope of Work for Pneumatic Fracturing and Chemical Injection", specified the performance of PF combined with the LAI of sodium lactate in five (5) injection locations designated as IW1, IW2, IW3, IW4 and IW5. The five injection boreholes were located just outside Building 318, off the south end of Isherwood Drive, as shown in Figure 1 of this report. The target treatment or injection zone extended from approximately 19 to 35 feet below ground surface (bgs). Preliminary calculations performed by HILL specified that a targeted dosage of 1,040 gallons of 60% sodium lactate solution would be required within the target treatment area, corresponding to 52 gallons of lactate (at 60%) per interval or 208 gallons per well.

As a result of the relatively small volumes of lactate required per interval, the required dosage of lactate (1,040 gallons) was diluted with 1,960 gallons of water to achieve a total reagent volume of 3000 gallons at a concentration of 26%. This dilution step was necessary to provide adequate coverage of lactate within the established fracture network. As a result, the total amount of sodium lactate at 26% solution distributed into the subsurface was 3000 gallons. This translates into 150 gallons of solution per injection interval.

3.0 SITE DESCRIPTION AND LAYOUT

3.1 Geology/Hydrogeology

The geology at this site consists of Coastal Plain sediments to a depth of approximately 28 feet bgs. Below 28 feet the soil type transitions to saprolite. The depth to water at this site is approximately 20 feet bgs. The thickness of the aquifer within the Coastal Plain sediments at this location is about 8 feet. The depth to competent bedrock is estimated at

about 40 feet based on the boring for well 09GW01. Groundwater flow is to the south-southwest and the hydraulic gradient through the hot spot is estimated at 0.043 ft/ft.

3.2 Injection Wells Installation and Layout

Prior to ARS' mobilization to the site, HILL coordinated and supervised the installation of the 5 injection wells. The boreholes were drilled to the water table and 5-inch steel casing was pressure-grouted in place to stabilize the overlying coastal plain sediments and prevent the borehole from collapsing. After the casing was installed and grouted, a 4-inch diameter borehole was advanced below the casing to the bottom of the injection zone, 3-inch PVC casing was inserted down the borehole to prevent the borehole from collapsing. The top 3 to 4 feet of the 3-inch casing was unscrewed below ground surface to allow for a packer at the top of the borehole for sealing and monitoring purposes. During injections the casing was retracted at the individual injection borehole and than replaced after injections subsided to prevent borehole collapse during subsequent injections.

4.0 OVERVIEW OF FIELD INJECTION PROCESSES AND PARAMETERS

Figure 1 presents a process schematic of the equipment setup used during a typical PF/LAI application. The nitrogen is utilized as the fracturing agent and delivery mechanism for the reagent being injected. Where large quantities of gas are required for injection purposes, the nitrogen is typically supplied in a bulk tube trailer as identified in Figure 1. ARS' proprietary Gas Injection Module accurately regulates the high-pressure nitrogen from the trailer to operational pressures and controlled flow rates necessary for the pneumatic fracturing and LAI operations. The mixing trailer mixes the sodium lactate solution and delivers the solution via two pneumatic diaphragm pumps to the injection piping.

Figure 1 – LAI Process Schematic

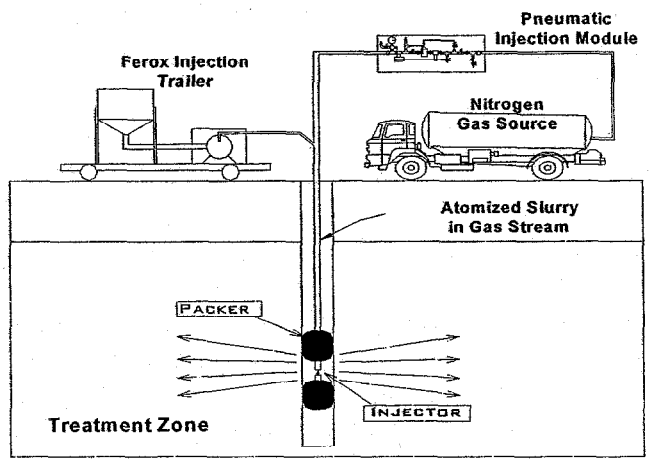

A pneumatic packer assembly was used to isolate the distinct PF and LAI intervals. This injection assembly consisted of three pneumatic packers. The bottom two packers straddle a 360-degree injection nozzle and isolate the injection interval when inflated. A third packer is used as a safety precaution. It is inflated within the casing to anchor the injection assembly and prevent any blow-by at the surface.

Prior to an injection, the straddled packer configuration is inflated to isolate the targeted injection interval. The injection process is typically initiated by the introduction of nitrogen for approximately 15 seconds to fracture or fluidize the formation surrounding the injection point. In low permeability formations, PF will take place at this point to create and propagate a fracture network. In higher permeability formations, the injection of the nitrogen gas will initiate a local mixing or fluidization effect instead of actual fracture generation. This delivery mechanism typically results in pore space dilation and can be attributed to non-cohesive or previously fractured soils. Subsequent to the successful introduction and establishment of gas flow into the formation, the sodium lactate solution is introduced into the gas stream and dispersed into the formation.

One note on such a gas-based injection process is the dispersion of the solution relies on the high exit velocity of the atomized slurry into the formation induced by the high volume flow rate of the gas. Once the flow of gas is initiated, fractures are generated and propagated almost instantaneously, typically over the duration of a few seconds. A geology's instantaneous response to these overwhelming pressures and flow rates that exceed the natural insitu pressures and permeabilities force the subsurface to respond in a brittle fashion resulting in the creation of rapid and numerous fractures. As a result, the required injection pressure is relatively low in comparison to other injection methods such as grout pumping or hydraulic fracturing, in which an incompressible fluid is pushed in slowly by creating a high-pressure gradient. The flow of the nitrogen is regulated and controlled by field personnel according to site-specific flow characteristics of the treatment zone.

During each injection, the following system operational parameters were observed and collected:

Injection Initiation and Maintenance Pressures

During each pneumatic injection, a pressure transducer located on the pneumatic injection module recorded data every 1/8 of a second. The data were used to create a pressure-history curve from which the initiation pressure and the maintenance pressure can be determined. The initiation pressure represents the pressure at which the formation yields to the influx of injection fluids. The maintenance pressure represents the pressure required to maintain the injection flow into the formation.

Pressure Influence at Adjacent Wells

During the injections, pressure gauges were placed at neighboring monitoring wells and injection boreholes to monitor for pressure influence. Each pressure gauge was outfitted with a drag arm indicator that records the maximum pressure detected at the monitoring point during the injection. The maximum indicating drag arm on each monitoring point was reset after each injection.

Ground Surface Heave

The heave monitoring was conducted using a surveying level in conjunction with a heave rod, which was placed adjacent to the injection point or at a location near a sensitive structure (e.g. structural column). The rod was observed for the maximum amount of upward motion (surface heave) and the post-injection resting position (residual heave).

5.0 SUMMARY OF FIELD ACTIVITIES

ARS commenced PF and LAI activities at IW1 on July 22, 2003. The injection activities lasted four (4) working days. The injections were completed in the order of IW1 (PF only), IW3, IW1 (LAI only), IW2, IW4 and IW5. **Table 1** summarizes the quantities of the sodium lactate solution injected at each injection interval, as well as the LAI flow rates, injection pressures and duration. PF data was collected after every fracturing event. Pressure verses time graphs can be found in **Appendix B** of this report.

Pressure influences at nearby monitoring wells, observed surface heave and injection fracture/maintenance pressures are presented in **Appendix A**. The pressure influence at a monitoring point is not to be used as a direct indicator of the actual dispersion distance of the sodium lactate solution. It offers qualitative information with regard to the formation's receptiveness to fluid injection in the various directions.

The following sections provide keynotes during the injection operations at each of the four injection points. They are presented in the order in which the injections were accomplished:

5.1 PF and LAI Injections

5.1.1 PF at IW1

PF at IW1 took place on July 22, 2003. Four (4) injection intervals were targeted and fractured from the bottom of the borehole to the top of the water table (30 to 19' bgs). Operational parameters collected during the injections indicated that two distinct fracturing events occurred at 22-25' and 27-30' bgs. This conclusion is based on the pressure curves presented in **Appendix B**, which show a distinct pressure peak (initiation pressure) followed by a rapid pressure drop that represents the maintenance pressure or fracture dilation pressure. At injection intervals 19-22' and 25-28' bgs a dilatation of pore space or re-dilation of a pre-existing fracture likely occurred. This conclusion was based on the pressure curves, which show a flat-line response with no discernable pressure peaks. Typically, these conditions are observed when injecting into permeable non-cohesive soils or when previously established fractures are re-dilated from a nearby injection point.

Fracture initiation pressures ranged from 80 to 110 psi and maintenance pressures ranged from 48 to 60 psi. Pore space dilatation pressures occurred from 60 to 140 psi. No surface heave was observed at IW1 during these injections. The injection pressure curves based on data downloaded from the data-logger are presented in **Appendix B** of this report.

A maximum measurable pressure influence of over 15 psi was detected 30.25' away from IW1 during the pneumatic fracturing events at 25-28' bgs. Overall the pressure distribution was relatively uniform in all directions. Pressure influence was measured at IW3, IW4 and GW214 during PF events at injection borehole IW1. Pressure influence data for all of the PF events are summarized in **Appendix A** of this report.

After fracturing the deepest two injection intervals at IW1, the packer assembly was lowered down to the bottom of the borehole to assure that the borehole did not collapse. It was determined that the borehole did not collapse, so the decision was made to fracture the entire site first to establish an interconnected fracture network and then return to each borehole to complete the LAI of sodium lactate. This method is only applicable if the boreholes remain open.

5.1.2 PF and LAI at IW3

PF and LAI injections at IW3 took place on July 22, 2003. Two (2) injection intervals were targeted corresponding to 23-26' bgs and 20-23' bgs. Field parameters collected during PF injections indicated that fracture re-dilation occurred from 20 to 26' bgs. This conclusion was based on the pressure curves, which show a flat-line response with no discernable pressure peaks. Typically, these conditions are observed when injecting into permeable non-cohesive soils or when previously established fractures are re-dilated from a nearby injection point. Consistent pressure responses observed at IW3 during PF operations at IW1 indicated that an interconnected fracture network had already been established between IW1 and IW3. Surface heave of 1/8" was measured during fracturing events. The injection pressure curves based on data downloaded from the data-logger are presented in **Appendix B** of this report.

Following PF activities at 20-23' bgs it was determined that the borehole had collapsed below the injector. Because of this collapse the deepest injection interval (23-26' bgs) was lost. In an effort to prevent further injection intervals from being lost, LAI was performed directly following PF events at each interval. This approach was used for the remainder of the project.

A maximum measurable pressure influence of 13 psi was detected 30.25' away from IW3 during pneumatic fracturing events at 23-26' bgs. During LAI injections pressure influence was detected in every injection and monitoring well located on the site. Pressure influence data for all of the PF and LAI events can be found in **Appendix A** of this report.

The LAI of sodium lactate occurred through the injection interval at a depth of 20-23' bgs. Through this injection interval, 150 gallons of sodium lactate solution was distributed into the subsurface at an injection pressure of 35 to 50 psi. The solution was injected at a gas flow rate of approximately 120

scfm. Surface heave was measured to be a 1/8" during LAI. A summary of the parameters recorded during this injection can be found in **Table 1** of this report.

5.1.3 LAI at IW1

LAI at IW1 took place on July 22 and 23, 2003. Approximately 750 gallons of sodium lactate solution was injected into IW1 through four (4) intervals from 30' bgs to 19' bgs as shown in **Table 1.** The PF injections took place previously and are mentioned above.

To avoid the potential collapse of IW1, the decision was made to inject lactate at IW1 after the borehole collapsed at IW3. Twice the targeted volume was injected at IW1 (25-28' bgs) to compensate for the lost interval at IW3. Consequently, three hundred gallons of sodium lactate solution was injected at IW1, injection interval 25-28' bgs. A total of 150 gallons of sodium lactate solution was distributed within each of the remaining injection intervals at IW1.

The LAI of sodium lactate occurred through the injection intervals 27-30', 25-28', 22-25' and 19-22' bgs. Through these injection intervals 750 gallons of the solution was distributed into the subsurface at an injection pressure ranging from 50-75 psi. The solution was injected at a gas flow rate of approximately 197 to 271 scfm. No surface heave was measured during any of these injections. A summary of the parameters recorded during these injections can be found in **Table 1** of this report.

A maximum measurable pressure influence of 3.5 psi was detected 70.28' away from IW1 during the LAI events at 19-22' bgs. Overall the pressure distribution was relatively uniform in all directions. During LAI injections pressure influence was detected at IW2, IW3, IW4, GW208, GW209, GW213 and GW214. Pressure influence data for all of the PF and LAI events can be found in **Appendix A** of this report.

A post-injection pH test was performed at 7 wells after the injections at IW3 and IW1 and it was determined that ground water at monitoring well GW214 was effected by the injected solution. This was demonstrated through a significant pH change from 4.35 (baseline) to 6 (post- injection). This was the only well that was measured that had background (pre-injection) data along with post-injection data. All of the other wells were in the same pH range as GW214.

5.1.4 PF and LAI at IW2

PF and LAI injections at IW3 took place simultaneously on July 23 and 24, 2003. Six (6) injection intervals were targeted and subsequently fractured from 37' to 19' bgs. Approximately 900 gallons of sodium lactate solution was injected into IW2 through the six (6) fractured intervals from 37' to 19' feet bgs as shown in **Table 1.**

PF occurred within this borehole at depths 19-22', 22-25', 25-28', 28-31' and 34-37' bgs. Fracture initiation pressures ranged from 100 to 160 psi and maintenance pressures ranged from 80 to 125 psi.

Pore space dilatation or fracture re-dilation occurred at one interval (31-34' bgs) corresponding to a maintenance pressure of 100 psi. Surface heave of 1/8" was measured during the fracturing event at the injection interval 19-22' bgs. The injection pressure curves based on data downloaded from the data-logger are presented in **Appendix B** of this report.

The LAI of sodium lactate occurred through the injection intervals19-22', 22-25', 25-28', 28-31', 31-33' and 34-37' bgs. Through these injection intervals 900 gallons of the solution was distributed into the subsurface at injection pressures ranging from 60-150 psi. The solution was injected at gas flow rates from approximately 217 to 959 scfm. Surface heave of a 1/8" was measured during LAI at 19-22' bgs. A summary of the parameters recorded during these injections can be found in **Table 1** of this report.

A maximum measurable pressure influence of 6.7 psi was detected over 70' away from IW2 during LAI events 25' to 28' bgs. During PF and LAI events pressure influence was detected at every monitoring well located on the site. Pressure influence data for all of the PF and LAI events can be found in **Appendix A** of this report.

During LAI activities at a depth of 31-34' bgs ground water began surfacing midway through the injection. Approximately 20-30 gallons of ground water was expelled through the top of the casing during this injection. This was due to the insufficient sealing of the borehole by the upper pneumatic packers. Following the injection, the injection assembly was pulled to diagnose the problem and it was found that the packer inflation line was broken off the packer. A new inflation line was installed and the packer assembly was lowered down to the next interval.

5.1.5 PF and LAI at IW4

PF and LAI injections at IW4 took place simultaneously on July 24 and 25, 2003. Two (2) injection intervals were targeted and fractured from 25' to 19' bgs. Approximately 600 gallons of sodium lactate solution was delivered into IW4 through two (2) intervals from 25' to 19' bgs as shown in **Table 1.**

PF occurred within this borehole at depths 19-22' and 22-25' bgs. Fracture initiation pressures ranged from 110 to 120 psi and maintenance pressures ranged from 80 to 100 psi. Surface heave of 1/8" was measured during both fracturing events. The injection pressure curves based on data downloaded from the data-logger are presented in **Appendix B** of this report.

LAI of sodium lactate occurred through the injection intervals 19-22' and 22-25' bgs. Through these injection intervals 600 gallons of the solution was distributed into the subsurface at an injection pressure ranging from 60-100 psi. The solution was injected at a gas flow rates from approximately 266 to 710 scfm. Surface heave was measured to be 1/4" during LAI at 22 –25' bgs. A summary of the parameters recorded during these injections can be found in **Table 1** of this report.

A maximum measurable pressure influence of 1.2 psi was detected over 70' away from IW4 during LAI events at 22-25' bgs. During PF and LAI events pressure influence was detected at every monitoring well located in the target treatment area. Pressure influence data for all of the PF and LAI events can be found in **Appendix A** of this report.

The two deepest intervals at this borehole were lost after the 3-inch PVC casing was retracted. The injection assembly was dropped down to the bottom of the borehole to prevent any further collapsing of the formation. Tremmy pipe was placed down the borehole and water was injected through it to try to jet out the collapsed material at the bottom of the borehole. No advancement of the packer assembly could be achieved. It was decided to inject double the target dosage at the two remaining intervals to offset the two lost injection intervals at this borehole.

5.1.6 PF and LAI at IW5

PF and LAI injections at IW5 took place on July 25, 2003. Four (4) injection intervals were isolated and fractured from 29.5' to 19' bgs. Approximately 600 gallons of sodium lactate solution was delivered via IW5 through four (4) intervals from 29.5' to 19' bgs as shown in **Table 1.**

PF may not have occurred within this borehole. The pressure curves indicate that either pore space dilation or fracture re-dilation may have occurred. Injection pressures ranged from 65 to 70 psi. Surface heave of 1/16" was measured during fracturing events at 19-22' bgs. The injection pressure curves based on data downloaded from the data-logger are presented in **Appendix B** of this report.

LAI of sodium lactate occurred through the injection intervals located 19-22', 22-25', 24.5-27.5' and 26.5-29.5' bgs. Through these injection intervals 600 gallons of solution was distributed into the subsurface at an injection pressures ranging from 50 to 90 psi. The solution was injected at gas flow rates from approximately 256 to 683 scfm. Surface heave was measured to be 1/4" during LAI at 22 –25' bgs and 1/8" during injections at 19-22' bgs. A summary of the parameters recorded during these injections can be found in **Table 1** of this report.

A maximum measurable pressure influence of 9.2 psi was detected over 70' away from IW5 during LAI events at 19'-22' feet bgs. During PF and LAI events pressure influence was detected at every monitoring well located in the target treatment area. Pressure influence data for all of the PF and LAI events can be found in **Appendix A** of this report.

The deepest three intervals at this borehole had to be overlapped by 0.5 to 1 foot because the borehole could not be advanced past 31.5' bgs. The overlapping of these injection intervals provided adequate spacing for four injections at this borehole.

5.2 Sodium Lactate Mixing Operations

Sodium lactate mixing operations were performed on-site within a 2 450-gallon poly tank. The targeted concentration was obtained by mixing measured amounts of lactate at 60% concentration with water. The 60% lactate solution was stored in 260-gallon totes that were stored on-site and movable with a forklift. The desired mixtures were obtained through the careful measurement and sufficient mixing of water and lactate solution. Water quantities were carefully measured with an in-line totalizer. The exact quantity of lactate at 60% was also easily estimated since the entire known volume of the totes were used. Mixing was accomplished through a recirculation line with a series of low-pressure high-flow pumps.

The sodium lactate and water was mixed into two batches within a 2450-gallon poly tank. Each of these batches consisted of 520 gallons of sodium lactate mixed with 980 gallons of water. To offset to acidic nature of the groundwater sodium hydroxide was mixed into the solution by CH2MHILL as needed.

5.2.1 Batch 1

The first sodium lactate batching operation was performed on July 22, 2003. This batch consisted of 980 gallons of water and 520 gallons of 60% sodium lactate within a 2450-gallon poly tank, resulting in a 1500-gallon solution at a concentration of 26%. The water was obtained from a local hydrant. This 1500-gallon mixture provided enough solution to complete ten 150-gallon injections, half of the injections that were to be performed at this site. A total of 1000 ml of sodium hydroxide was added to this solution to offset the acidic nature of the groundwater. The solution was mixed using a transfer pump with the inlet hooked up to the bottom of the poly-tank and the outlet flowing into the tank through the top. The pH of the solution was measured to be 11.5.

Batch 1 was used to treat the following intervals: IW1 (19-22', 22-25', 25-28' and 27-30' bgs); IW2 (19-22', 22-25', 25-28' and 27-30' bgs) and IW3 (20-23' bgs).

5.2.2 Batch 2

The second sodium lactate batching operation was performed on July 24, 2003. This batching occurred directly following the injection interval 25-28' bgs at IW2. A total 980 gallons of water from a hydrant was mixed with 520 gallons of 60% sodium lactate within a 2450 gallon poly tank. A total of 750 ml of sodium hydroxide was added to the solution to offset the acidic nature of the groundwater. The solution was mixed using a transfer pump with the inlet hooked up to the bottom of the poly-tank and the outlet flowing into the tank through the top. The pH of the solution was measured to be 10. This 1500-gallon mixture provided enough solution to complete the second half of this site.

6.0 CONCLUSIONS

- Pneumatic Fracturing and Liquid Atomized Injection technology was successfully applied at the former NSWC White Oak, Silver Spring, Maryland. The mechanics and process of the injection were applicable to the site conditions.

- The field application of PF and LAI demonstrated the effectiveness of these technologies as a permeability enhancer and delivery technique to augment enhanced bioremediation at the site. This was directly evident through pH increases in all the monitoring wells located within the pilot test area following the injections. The success of PF was demonstrated subsequent to the sodium lactate injections through evaluation of operational data parameters, which provided evidence that an interconnected fracture network was likely established and permeability enhancements likely occurred within the treatment zones.

- Through analysis of the pressure verse time data it was determined that pneumatic fracturing was required prior to the addition of sodium lactate. Of the 16 injection intervals, pneumatic fracturing was required at 8. Fracture initiation pressure ranged from 80 to 150 psi and maintenance pressure ranged from 48 to 125 psi. Where flat-lined pressure curves were observed, the formations receptiveness to liquid and gas injection was very high. This receptiveness likely resulted from the presence of an interconnected fracture network due to the PF events.

- During both the PF and LAI injections significant pressure influence was observed within all monitoring points at the site. More specifically, pressure influence was observed to be relatively uniform at the surrounding monitoring points suggesting an optimal 360° dispersion within the targeted treatment zones. The pressure influence data supports the pressure verses time data discussed above and is an indication that fractures were likely initiated and propagated within the target treatment zone and resulting in significant permeability enhancements.

- A total of 3000 gallons of sodium lactate/water solution was emplaced via five (5) injection locations located around Building 318 at the White Oak facility. Within each batch of 150 gallons sodium lactate/water solution, 52 gallons of 60% sodium lactate was injected. This translates into 1,040 gallons of 60% sodium lactate solution injected into the subsurface throughout the site. When injection intervals were lost due to borehole collapse, dosages were adjusted accordingly to maximize coverage of the target treatment zone. Through this technique sodium lactate was distributed fairly evenly through the five injection boreholes.

- Liquid Atomized Injection pressures typically ranged between 35 to 100 psig. LAI effectiveness was demonstrated through direct pH changes at surrounding monitoring points. Based on field observations of solution propagation to neighboring wells, pressure response at monitoring wells, the formations receptiveness to injection and the pressure history curves it can be concluded that sodium lactate solution was effectively emplaced at sufficient quantities 20-25 feet in radial distance from the injection points.

- Recommendations for full-scale application at this site are: (1) Injection boreholes should be installed using a 4-inch steel casing to the bottom of the injection interval instead of the 3-inch PVC casing. The injector can be lowered down the 4-inch casing and the casing can be retracted along with the injection assembly after each injection interval. This will prevent the boreholes for collapsing. (2) Detailed background data such as pH should be measured at each of the monitoring wells located in the target treatment area. This would give a more definitive and realistic model to base the radius of influence on.

Figure 1

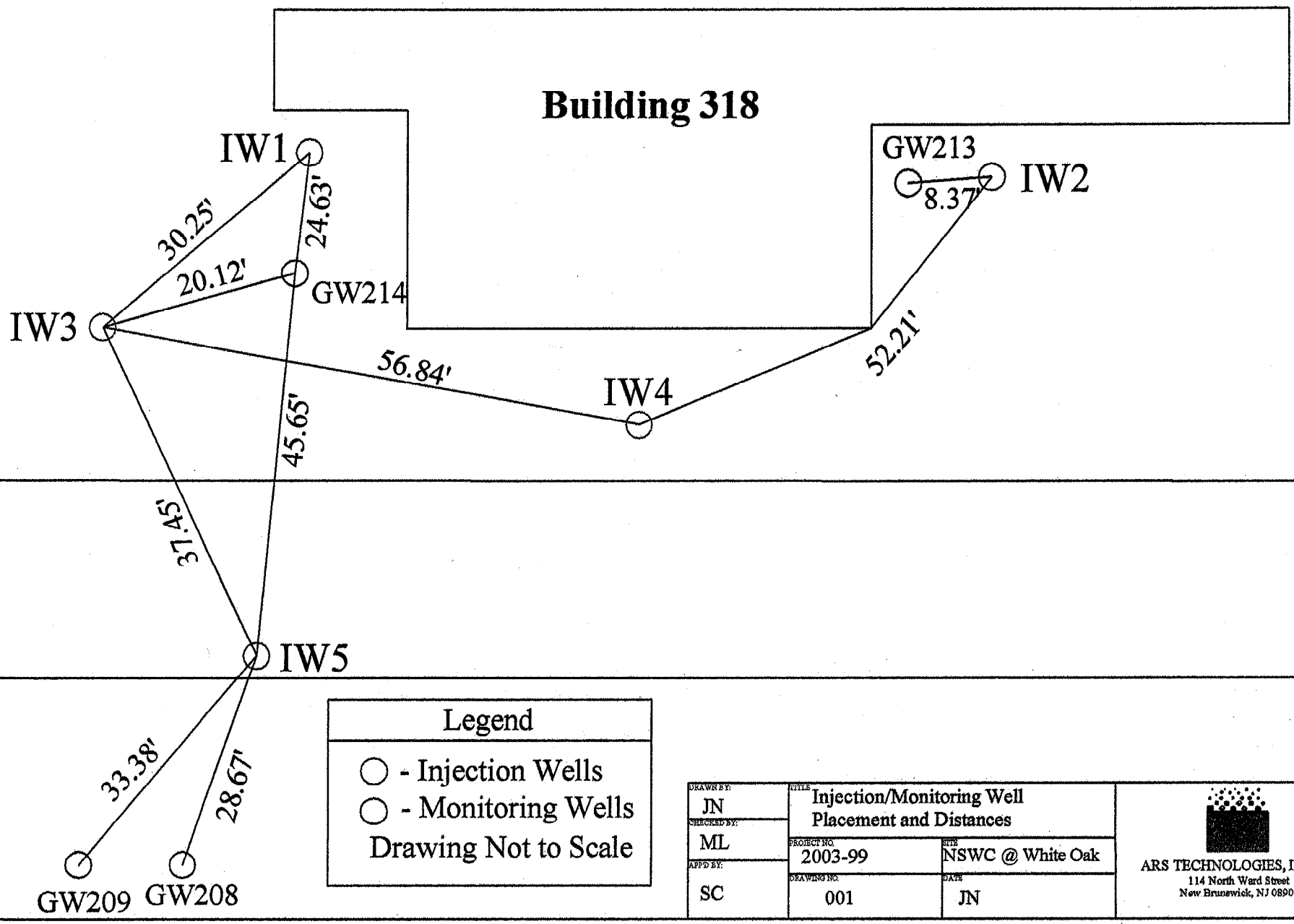

Legend

○ - Injection Wells

○ - Monitoring Wells

Drawing Not to Scale

DRAWN BY: JN	TITLE: Injection/Monitoring Well Placement and Distances		ARS TECHNOLOGIES, INC. 114 North Ward Street New Brunswick, NJ 08901
CHECKED BY: ML	PROJECT NO. 2003-99	SITE NSWC @ White Oak	
APP'D BY: SC	DRAWING NO. 001	DATE JN	

Table 1

Table 1 - Summary of Sodium Lactate Injecition Parameters

Injection Well	Injection Interval (ft. bgs)	Amount of Sodium Lactate Injected (gallons)	Injection Pressure (psi)	Injection Duration (minutes)	Liquid Injection Flow Rate (gpm)	Nitrogen Gas Flow Rate (scfm)
IW1	27-30'	150	50	4	37.5	271
	25-28'	300	50	6	50	271
	22-25'	150	50-60	5	30	217
	19-22'	150	75	11	27.26	197
IW2	34-37'	150	100	7	21.42	310
	31-34'	150	100	5	30	217
	28-31'	150	75-150	4	37.5	542
	25-28'	150	60-70	7	21.42	542
	22-25'	150	100	5	30	959
	19-22'	150	80	6	25	799
IW3	20-23'	150	35-50	9	16.66	120
IW4	22-25' (Batch #1)	150	80	9	16.66	710
	22-25' (Batch #2)	150	70	7	21.42	304
	19-22' (Batch #1)	150	60	4	37.5	266
	19-22' (Batch #2)	150	100	6	25	710
IW5	26.5-29.5'	150	70	7	21.42	595
	24.5-27.5'	150	50-75	4	37.5	256
	22-25'	150	80	6	25	685
	19-22'	150	90	15	10	683

Appendix A

Type of Injection	Interval (ft bgs)	Pressure Influence (well/psi)	Distance from Injection Well (ft)	Surface Heave (Inches)	Down Hole Injection Pressure and Frac/Maint (psi)
IW01					
Pneumatic Fracturing	27-30'	IW3/12.6	30.25'	0	80/60
		IW4/1.2	NM	0	SI
		GW214/4	24.12'	0	SI
LAI	27-30'	IW2/GE	NM	0	50
		IW3/15.9	30.25'	SI	SI
		IW4/GE	NM	SI	SI
		GW209/GE	70+	SI	SI
		GW213/GE	70+	SI	SI
		GW214/12.4	24.12'	SI	SI
Pneumatic Fracturing	25-28'	IW3/15+	30.25'	0	60/60
		GW214/6.2	24.12'	SI	SI
LAI	25-28'	IW2/GE	NM	0	50
		IW3/10.5	30.25'	SI	SI
		IW4/GE	NM	SI	SI
		GW209/GE	70+	SI	SI
		GW213/GE	70+	SI	SI
		GW214/7.2	24.12'	SI	SI
Pneumatic Fracturing	22-25'	IW3/GE	30.25'	0	110/48
		IW4/GE	NM	SI	SI
		GW214/.8	24.12'	SI	SI
LAI	22-25'	IW2/GE	NM	0	50-60
		IW3/15+	30.25'	SI	SI
		IW4/0.6	NM	SI	SI
		GW213/GE	70+	SI	SI
		GW214/13.4	24.12'	SI	SI
Pneumatic Fracturing	19-22'	IW3/GE	30.25'	0	140/100
		IW4/GE	NM	SI	SI
		GW214/.4	24.12'	SI	SI
LAI	19-22'	IW2/GE	NM	0	75
		IW3/15+	30.25'	SI	SI
		IW4/4.8	NM	SI	SI
		IW5/3.5	70.28'	SI	SI
		GW208/GE	70+	SI	SI
		GW209/GE	70+	SI	SI
		GW213/GE	NM	SI	SI
		GW214/15+	24.63'	SI	SI
IW2					
Pneumatic Fracturing	34-37'	IW3/GE	70'+	0	160/100
		IW4/0.8	52.21'	SI	SI
		GW213/7.8	8.37'	SI	SI
		GW214/GE	NM	SI	SI
LAI	34-37'	IW1/GE	NM	0	100
		IW3/GE	70'+	SI	SI
		IW4/0.8	52.21'	SI	SI
		GW213/7.8	8.37'	SI	SI
		GW214/GE	NM	SI	SI

N/M - Not able to be measured **N/D - No Data** **GE - Gas Emitted** **SI - Same Injection**

Type of Injection	Interval (ft bgs)	Pressure Influence (well/psi)	Distance from Injection Well (ft)	Surface Heave (Inches)	Down Hole Injection Pressure and Frac/Maint (psi)
		IW2			
Pneumatic Fracturing	31-34'	IW3/GE	70'+	0	100/100
		IW4/1.0	52.21'	SI	SI
		GW213/0.5	8.37'	SI	SI
		GW214/GE	NM	SI	SI
LAI	31-34'	IW3/GE	70'+	0	100
		IW4/GE	52.21'	SI	SI
		GW213/5.25	8.37'	SI	SI
		GW214/GE	NM	SI	SI
Pneumatic Fracturing	28-31'	IW1/GE	NM	0	150/125
		IW4/GE	52.21'	SI	SI
		GW213/15+	8.37'	SI	SI
		MW214/GE	NM	SI	SI
LAI	28-31'	IW1/4.6	NM	0	75-150
		IW3/4.5	70'+	SI	SI
		IW4/GE	52.21'	SI	SI
		GW213/15+	8.37'	SI	SI
		GW214/4.5	NM	SI	SI
Pneumatic Fracturing	25-28'	IW1/GE	NM	0	125/100
		IW3/GE	70'+	SI	SI
		IW4/GE	52.21'	SI	SI
		GW209/GE	70'+	SI	SI
		GW213/15+	8.37'	SI	SI
		GW214/GE	NM	SI	SI
LAI	25-28'	IW1/9	NM	0	60-70
		IW3/6.7	70'+	SI	SI
		IW4/8.7	52.21'	SI	SI
		GW208/GE	70'+	SI	SI
		GW209/GE	70'+	SI	SI
		GW213/15+	8.37'	SI	SI
		GW214/10.5	NM	SI	SI
Pneumatic Fracturing	22-25'	IW1/GE	NM	0	100/80
		IW3/GE	70'+	SI	SI
		IW4/GE	52.21'	SI	SI
		GW213/15+	8.37	SI	SI
		GW214/GE	NM	SI	SI
LAI	22-25'	IW1/12.6	NM	0	100
		IW3/12.6	70'+	SI	SI
		IW4/4.2	52.21'	SI	SI
		GW208/GE	70'+	SI	SI
		GW213/15+	8.37'	SI	SI
		GW214/13.1	NM	SI	SI
Pneumatic Fracturing	19-22'	IW1/GE	NM	1/8	110/80
		IW4/8.2	52.21'	SI	SI
		IW5GE	70'+	SI	SI
		GW208/GE	70'+	SI	SI
		GW209/GE	70'+	SI	SI

N/M - Not able to be measured **N/D - No Data** **GE - Gas Emitted** **SI - Same Injection**

Type of Injection	Interval (ft bgs)	Pressure Influence (well/psi)	Distance from Injection Well (ft)	Surface Heave (Inches)	Down Hole Injection Pressure and Frac/Maint (psi)
IW2					
LAI	19-22'	GW213/15+	8.37'	SI	SI
		GW214/GE	NM	SI	SI
		IW1/GE	NM	1/8	110/80
		IW3/GE	70'+	SI	SI
		IW4/3.0	52.21'	SI	SI
		GW209/GE	70'+	SI	SI
		GW213/12	8.37'	SI	SI
		GW214/GE	NM	SI	SI
IW3					
Pneumatic Fracturing	23-26'	IW1/13	30.25'	1/8	65/65
		IW2/1.0	NM	SI	SI
		IW4/GE	56.84'	SI	SI
		GW213/1.0	NM	SI	SI
		GW214/15+	20.12'	SI	SI
Pneumatic Fracturing	20-23'	IW1/4.0	30.25'	1/8	65/60
		IW4/GE	56.84'	SI	SI
		GW213/1.0	NM	SI	SI
		GW214/5.1	20.12'	SI	SI
LAI	20-23'	IW1/7.8	30.25'	1/8	35-50
		IW2/GE	NM	SI	SI
		IW4/3.6	56.84'	SI	SI
		IW5/1.8	37.45'	SI	SI
		GW208/0.8	50'+	SI	SI
		GW209/GE	50'+	SI	SI
		GW213/GE	NM	SI	SI
		GW214/6.8	20.12'	SI	SI
IW4					
Pneumatic Fracturing	22-25'	IW1/GE	NM	1/8	120/100
		IW2/GE	52.21'	SI	SI
		IW3/GE	56.84'	SI	SI
		GW213/0.2	50'+	SI	SI
		GW214/GE	NM	SI	SI
LAI (Batch #1)	22-25'	IW1/2.5	NM	1/4	80
		IW2/3.0	52.21'	SI	SI
		IW3/5.4	56.84'	SI	SI
		IW5/5.0	50'+	SI	SI
		GW208/GE	70'+	SI	SI
		GW209/GE	70'+	SI	SI
		GW213/3.2	50'+	SI	SI
		GW214/4.0	NM	SI	SI
LAI (Batch #2)	22-25'	IW1/3.6	NM	1/4	70
		IW2/3.5	52.21'	SI	SI
		IW3/5.4	56.84'	SI	SI
		IW5/7.0	50'+	SI	SI
		GW208/1.2	70'+	SI	SI

N/M - Not able to be measured **N/D - No Data** **GE - Gas Emitted** **SI - Same Injection**

Type of Injection	Interval (ft bgs)	Pressure Influence (well/psi)	Distance from Injection Well (ft)	Surface Heave (Inches)	Down Hole Injection Pressure and Frac/Maint (psi)
IW4					
Pneumatic Fracturing	19-22'	GW209/1.2	70'+	SI	SI
		GW213/1.0	50'+	SI	SI
		GW214/5.0	NM	SI	SI
		IW2/9.8	52.21'	1/8	110/80
		IW3/GE	56.84	SI	SI
		GW213/GE	50'+	SI	SI
		GW214/3.8	NM	SI	SI
LAI (Batch #1)	19-22'	IW1/3.4	NM	0	60
		IW2/9.8	52.21'	SI	SI
		IW3/GE	56.84'	SI	SI
		IW5/2.2	50'+	SI	SI
		GW208/GE	70'+	SI	SI
		GW209/GE	70'+	SI	SI
		GW213/0.6	50'+	SI	SI
		GW214/5.8	NM	SI	SI
LAI (Batch #2)	19-22'	IW1/6.5	NM	0	100
		IW2/11.0	52.21'	SI	SI
		IW3/7.0	56.84'	SI	SI
		IW5/8.8	50'+	SI	SI
		GW208/2.0	70'+	SI	SI
		GW209/2.6	70'+	SI	SI
		GW213/5.8	50'+	SI	SI
		GW214/7.6	NM	SI	SI
IW5					
Pneumatic Fracturing	26.5-29.5'	IW1/GE	70.28'	0	65/65
		IW2/7.6	70'+	SI	SI
		GW208/12.4	28.67'	SI	SI
		GW209/GE	33.38'	SI	SI
		GW213/GE	70'+	SI	SI
		GW214/GE	45.65'	SI	SI
LAI	26.5-29.5'	IW2/7.2	70'+	0	70
		IW3/GE	37.45'	SI	SI
		GW20815+	28.67'	SI	SI
		GW209/15+	33.38'	SI	SI
		GW213/GE	70'+	SI	SI
		GW214/GE	45.65'	SI	SI
Pneumatic Fracturing	24.5-27.5'	IW3/GE	37.45'	0	75/75
		GW208/6.3	28.67	SI	SI
		GW209/GE	33.38'	SI	SI
LAI	24.5-27.5'	IW2/8.0	70'+	0	50-75
		IW4/GE	50'+	SI	SI
		GW208/6.3	28.67'	SI	SI
		GW209/GE	33.38'	SI	SI
Pneumatic Fracturing	22-25'	IW2/7.7	70'+	0	70/70
		IW3/GE	37.45'	SI	SI
		GW208/11.5	28.67'	SI	SI

N/M - Not able to be measured **N/D - No Data** **GE - Gas Emitted** **SI - Same Injection**

Type of Injection	Interval (ft bgs)	Pressure Influence (well/psi)	Distance from Injection Well (ft)	Surface Heave (Inches)	Down Hole Injection Pressure and Frac/Maint (psi)
		IW5			
Pneumatic Fracturing	22-25'	GW209/1.0	33.38'	SI	SI
		GW213/GE	70'+	SI	SI
		GW214/GE	45.65'	SI	SI
LAI	22-25'	IW1/GE	70.28'	1/4	80
		IW2/7.7	70'+	SI	SI
		IW3/GE	37.45'	SI	SI
		IW4/GE	50'+	SI	SI
		GW208/15+	28.67'	SI	SI
		GW209/15+	33.38'	SI	SI
		GW213/GE	70'+	SI	SI
		GW214/1.5	45.65'	SI	SI
Pneumatic Fracturing	19-22'	IW1/GE	70.28'	1/16	70/70
		IW2/8.2	70'+	SI	SI
		GW208/8.0	28.67'	SI	SI
		GW209/3.0	33.38'	SI	SI
		GW213/GE	70'+	SI	SI
		GW214/GE	45.65'	SI	SI
LAI	19-22'	IW1/GE	70.28'	1/8	90
		IW2/9.2	70'+	SI	SI
		IW3/3.0	37.45'	SI	SI
		IW4/8.8	70'+	SI	SI
		GW208/15+	28.67'	SI	SI
		GW209/8.8	33.38'	SI	SI
		GW213/GE	70'+	SI	SI
		GW214/4.8	70'+	SI	SI

N/M - Not able to be measured **N/D - No Data** **GE - Gas Emitted** **SI - Same Injection**

Appendix B

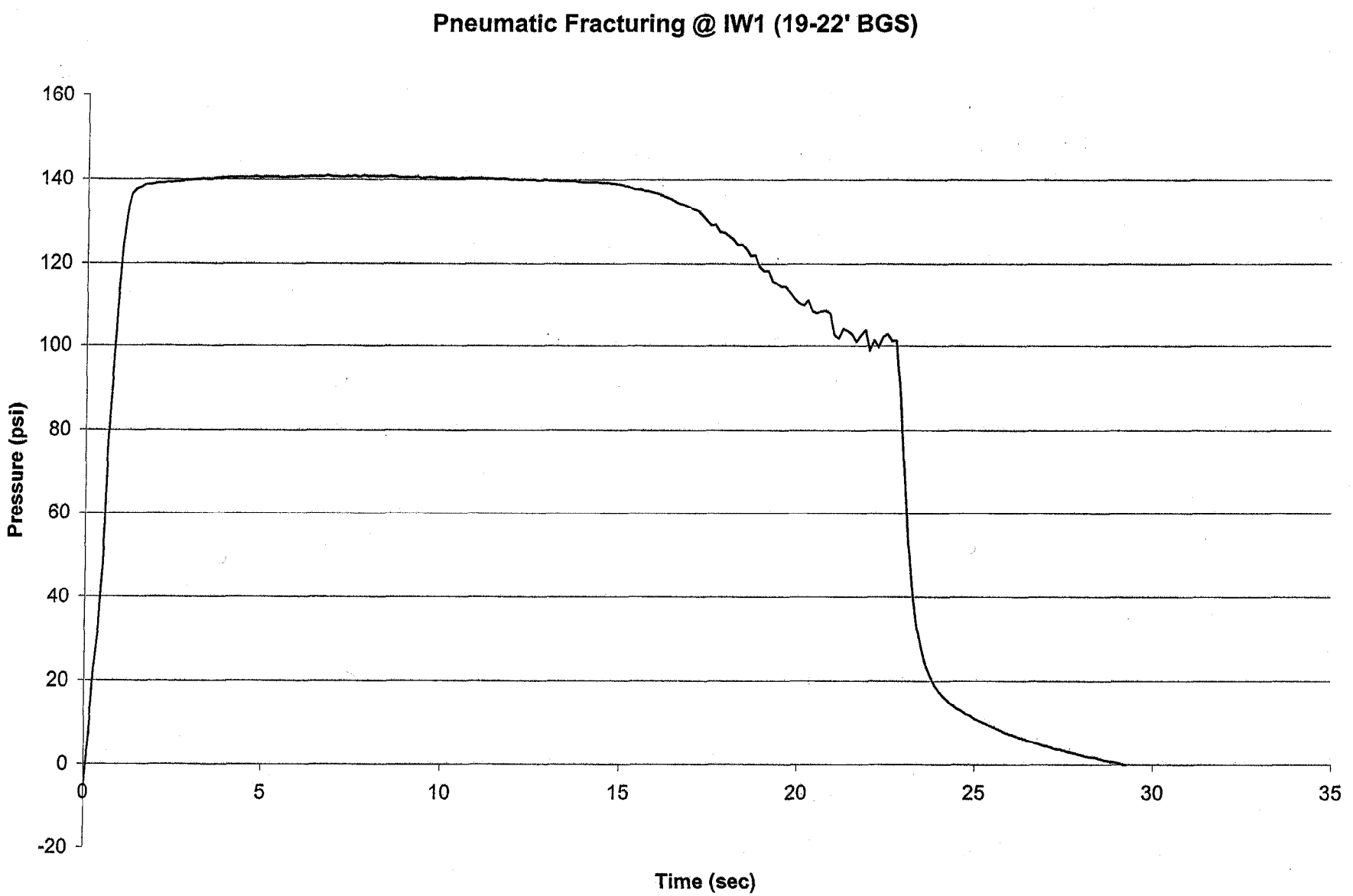
Pneumatic Fracturing @ IW1 (19-22' BGS)
Pressure (psi)
160
140
120
100
80
60
40
20
0
-20
0
5
10
15
20
25
30
35
Time (sec)

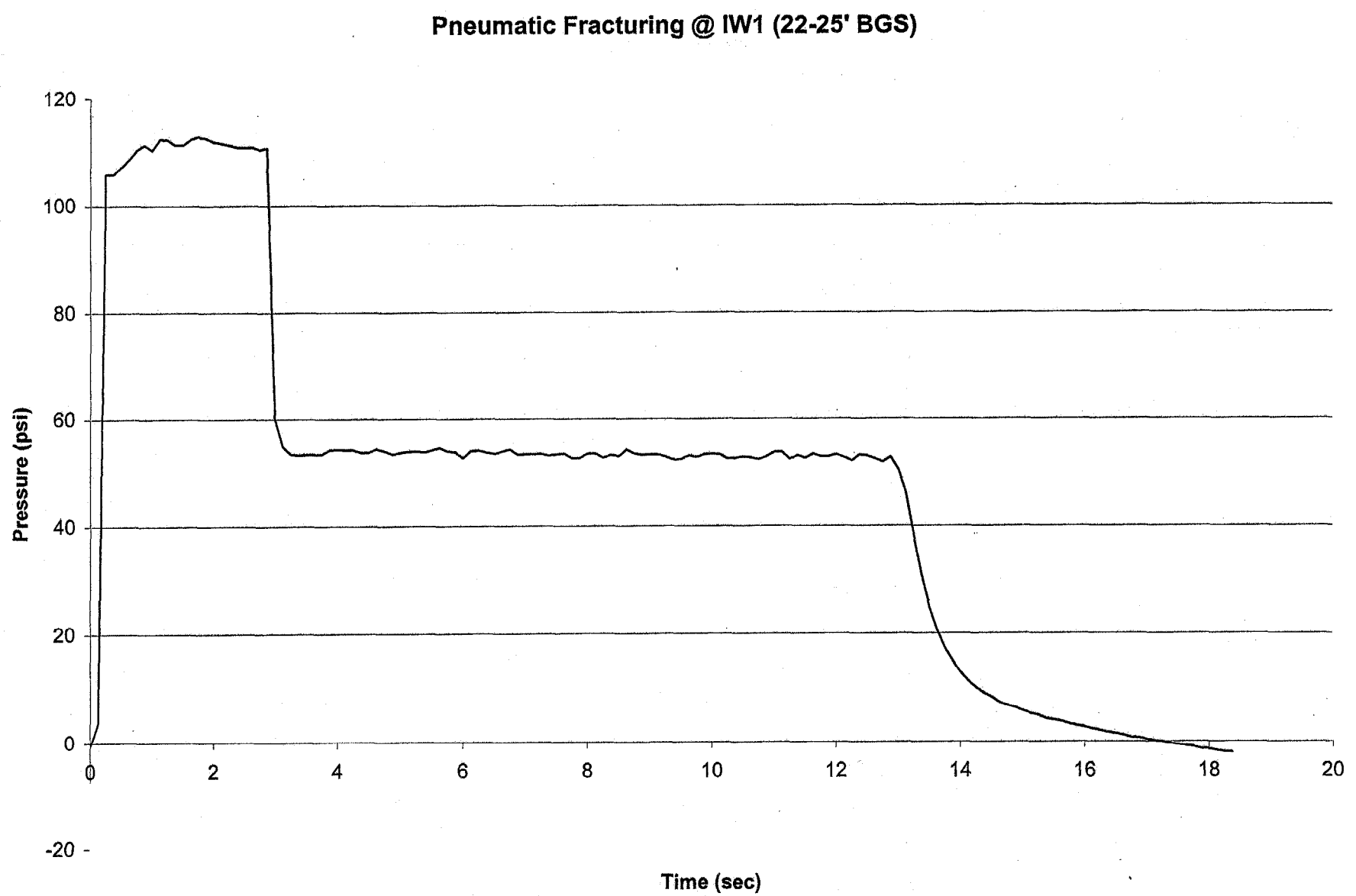
Pneumatic Fracturing @ IW1 (22-25' BGS)
Pressure (psi)
120
100
80
60
40
20
0
-20
0
2
4
6
8
10
12
14
16
18
20
Time (sec)

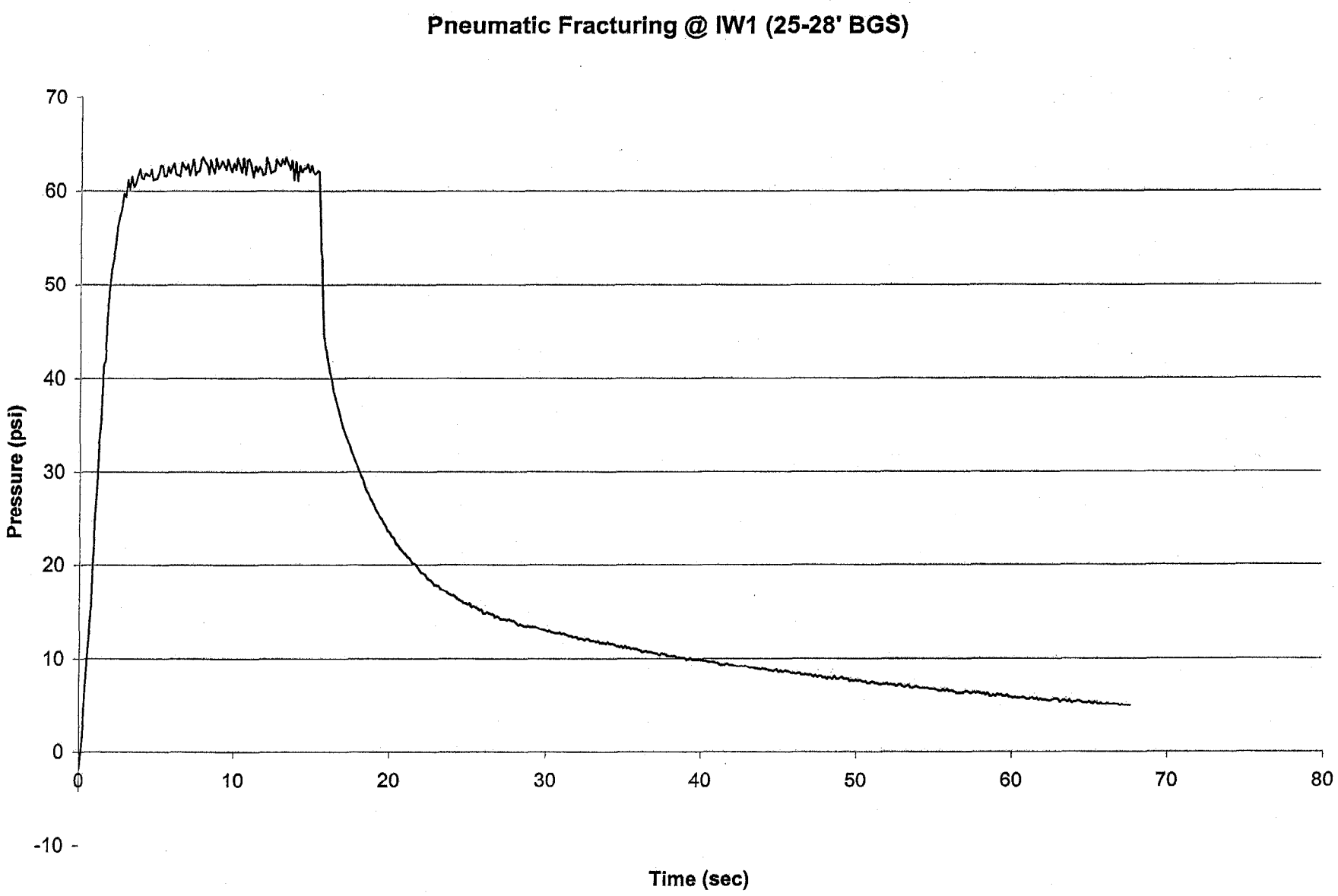
Pneumatic Fracturing @ IW1 (25-28' BGS)
Pressure (psi)
70
60
50
40
30
20
10
0
-10
0
10
20
30
40
50
60
70
80
Time (sec)

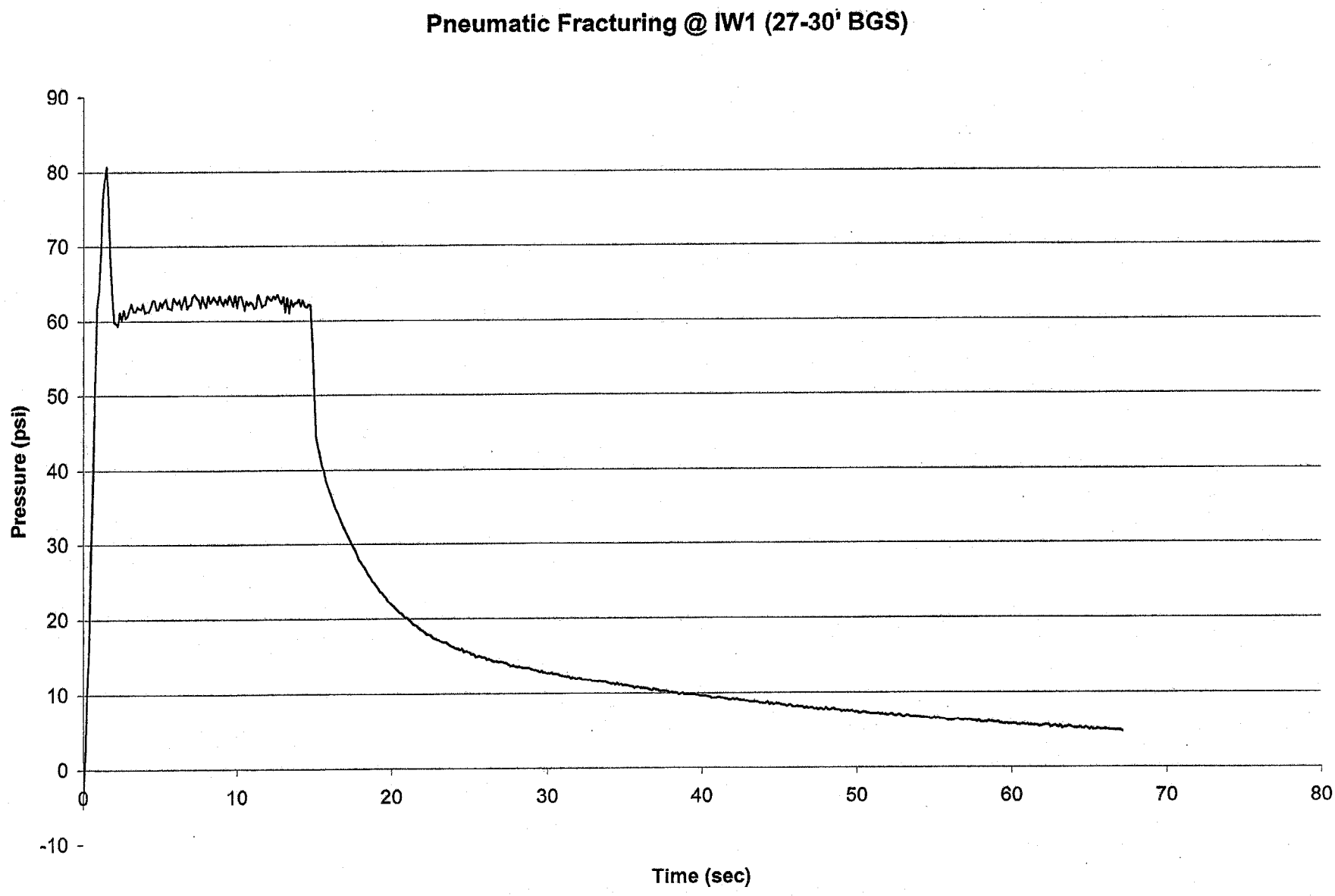
Pneumatic Fracturing @ IW1 (27-30' BGS)
Pressure (psi)
90
80
70
60
50
40
30
20
10
0
-10
0
10
20
30
40
50
60
70
80
Time (sec)

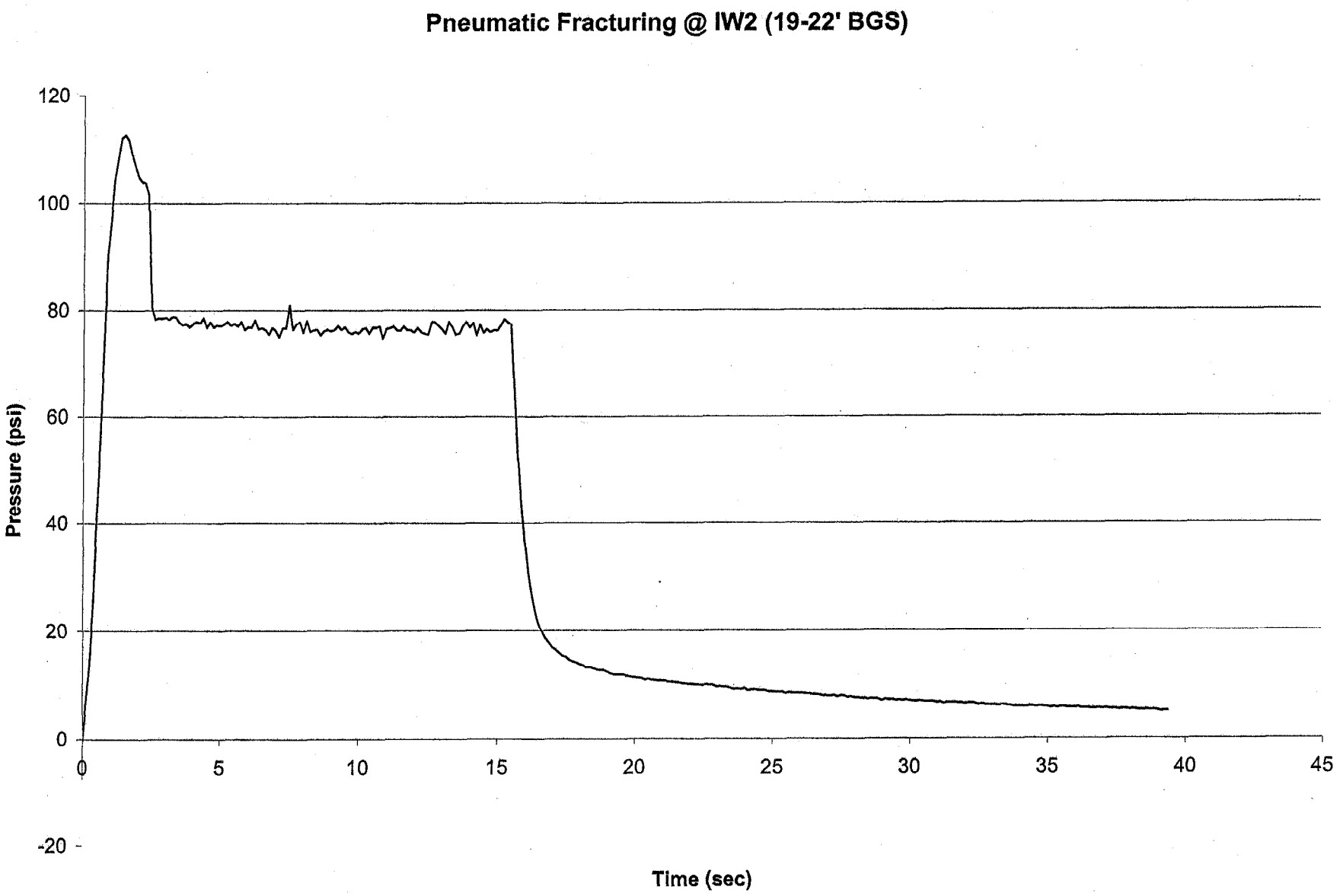
Pneumatic Fracturing @ IW2 (19-22' BGS)
Pressure (psi)
120
100
80
60
40
20
0
-20
0
5
10
15
20
25
30
35
40
45
Time (sec)

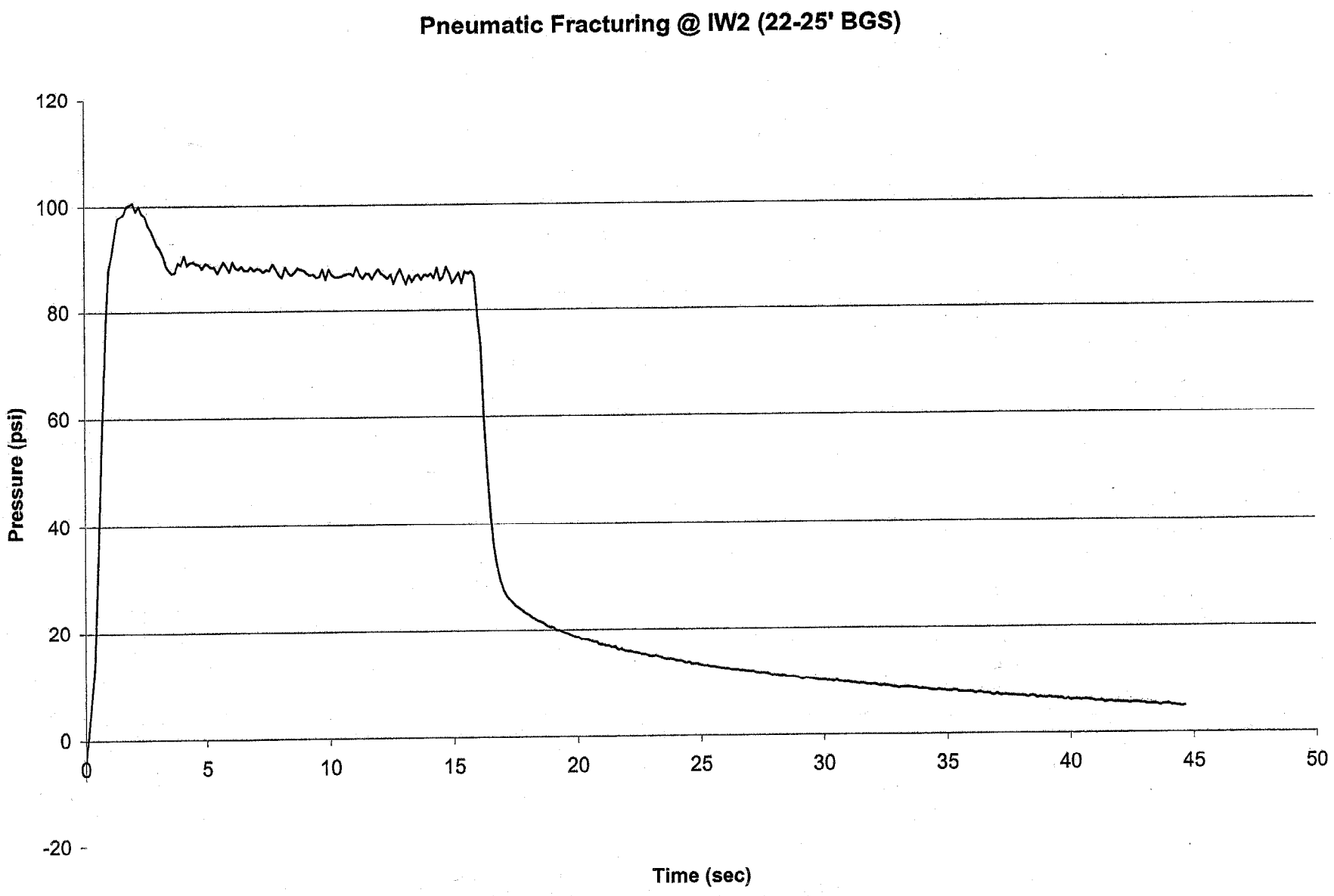
Pneumatic Fracturing @ IW2 (22-25' BGS)
Pressure (psi)
120
100
80
60
40
20
0
-20
0
5
10
15
20
25
30
35
40
45
50
Time (sec)

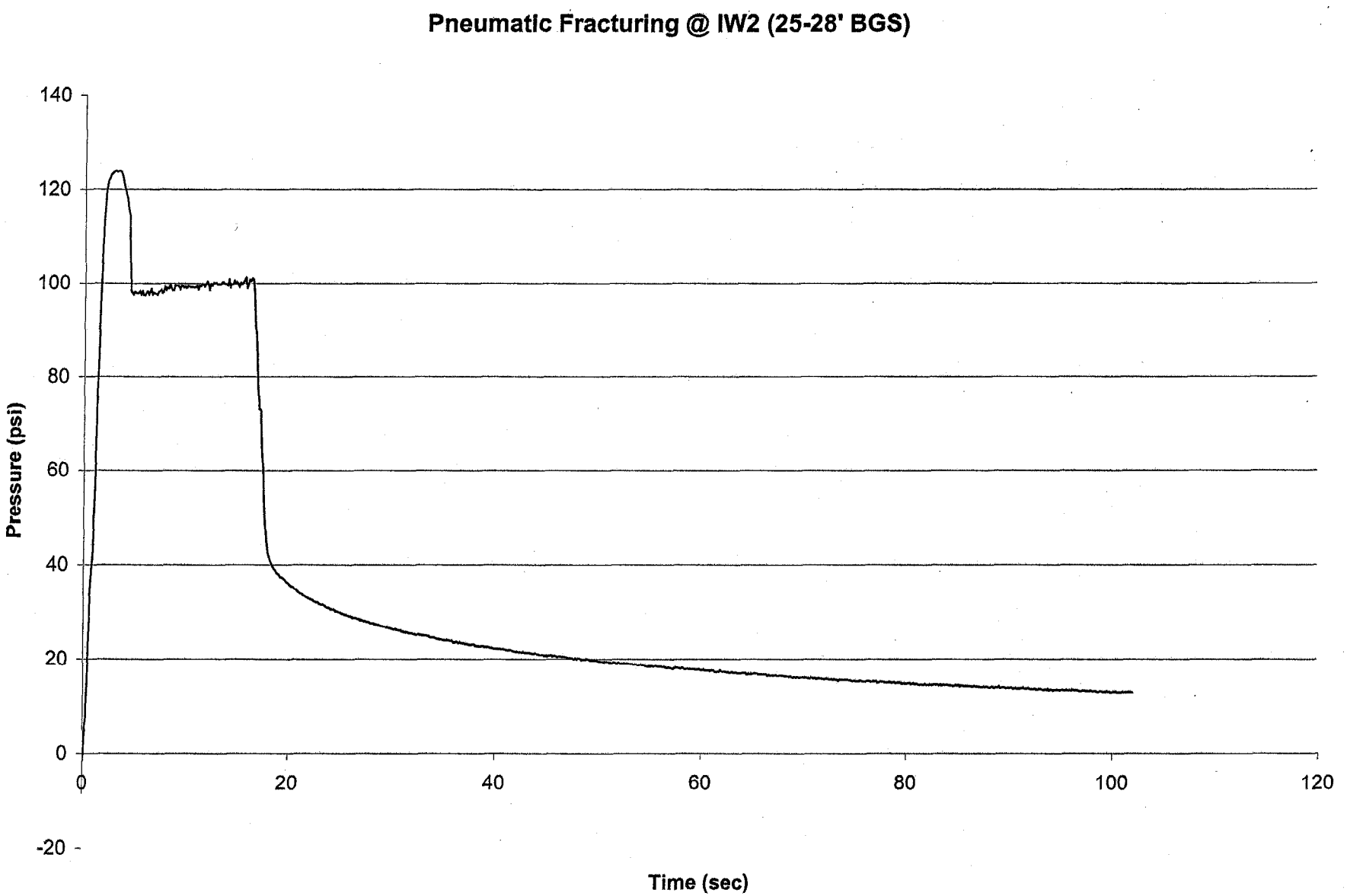
Pneumatic Fracturing @ IW2 (25-28' BGS)
Pressure (psi)
140
120
100
80
60
40
20
0
-20
0
20
40
60
80
100
120
Time (sec)

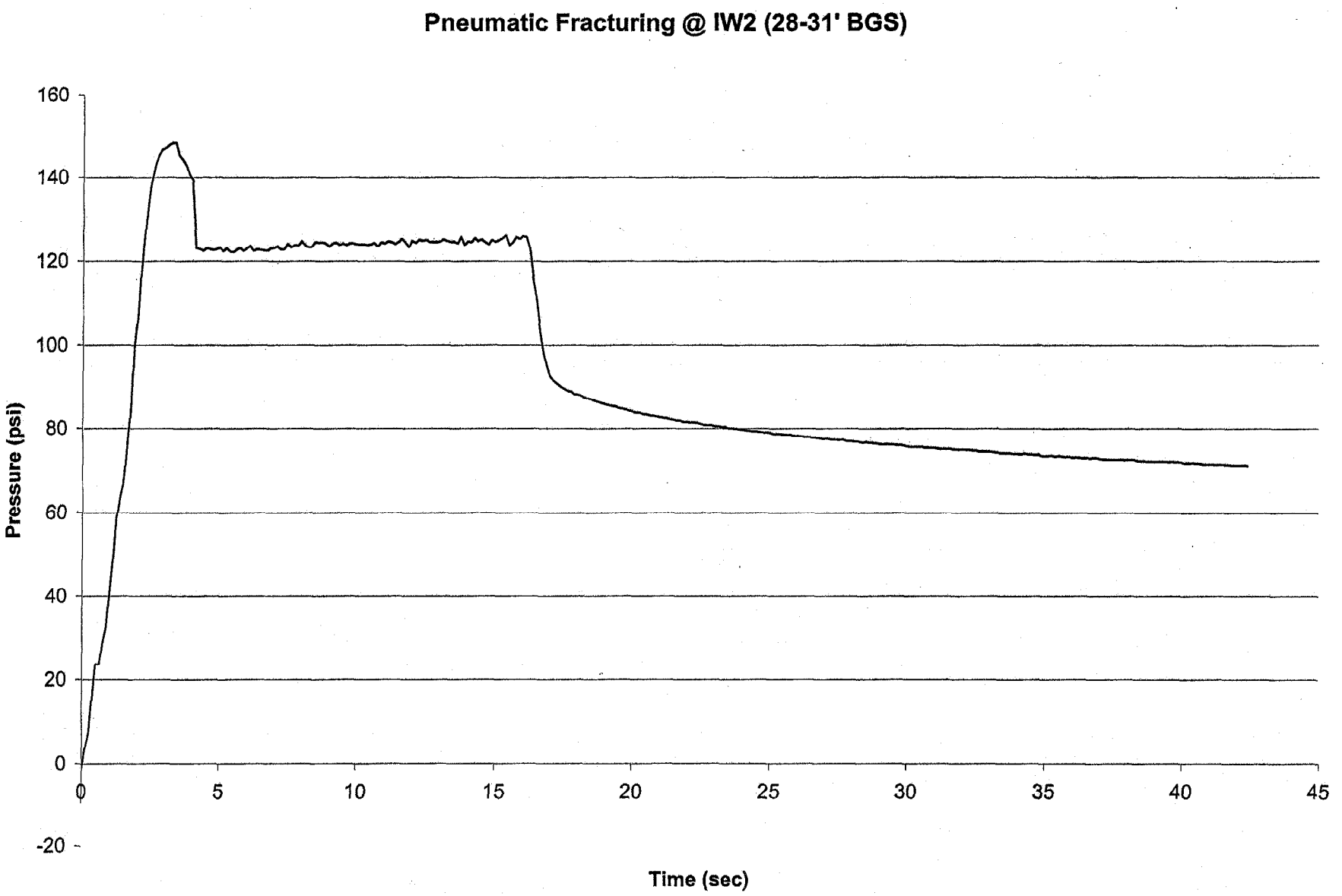
Pneumatic Fracturing @ IW2 (28-31' BGS)
Pressure (psi)
160
140
120
100
80
60
40
20
0
-20
0
5
10
15
20
25
30
35
40
45
Time (sec)

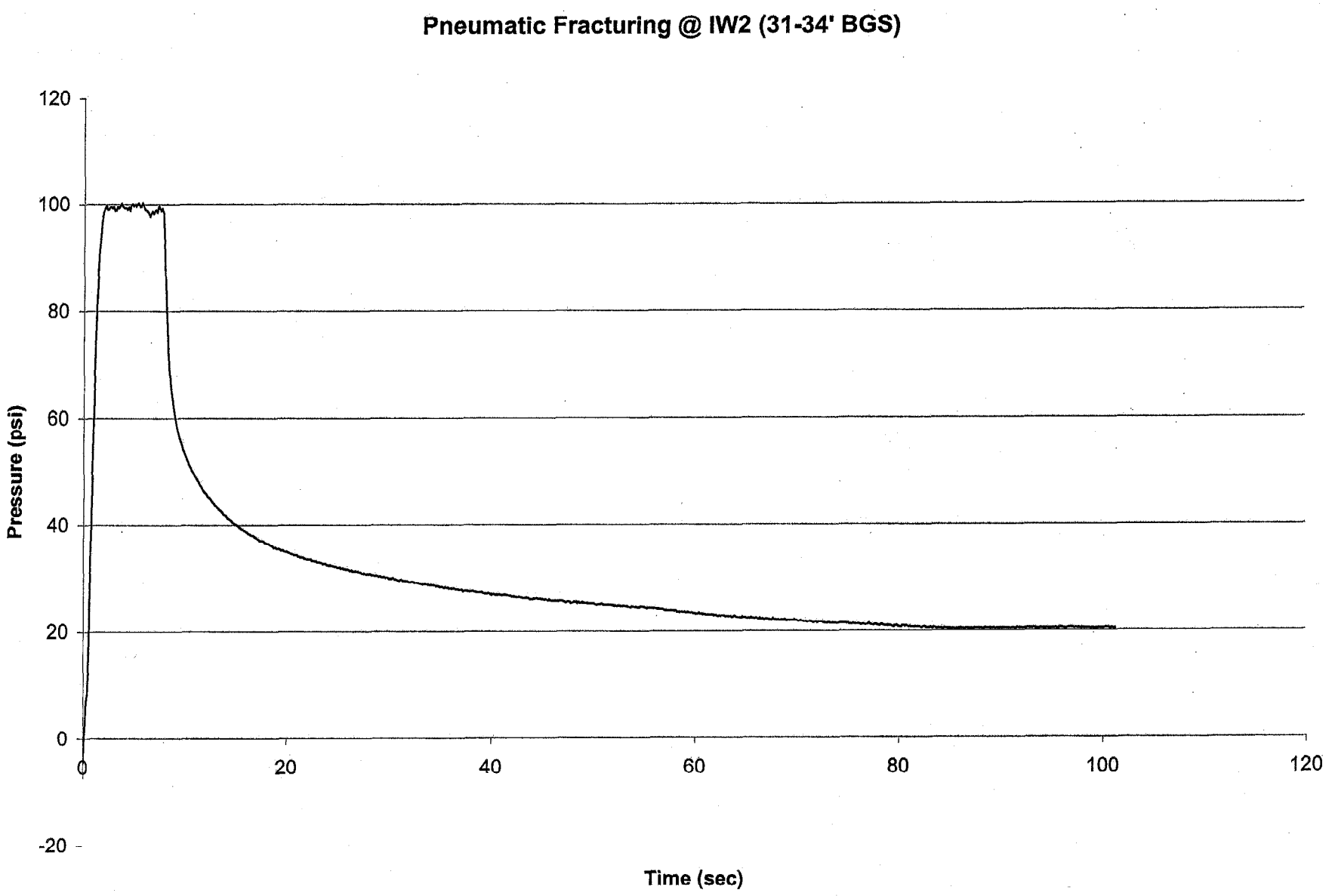
Pneumatic Fracturing @ IW2 (31-34' BGS)
Pressure (psi)
120
100
80
60
40
20
0
-20
0
20
40
60
80
100
120
Time (sec)

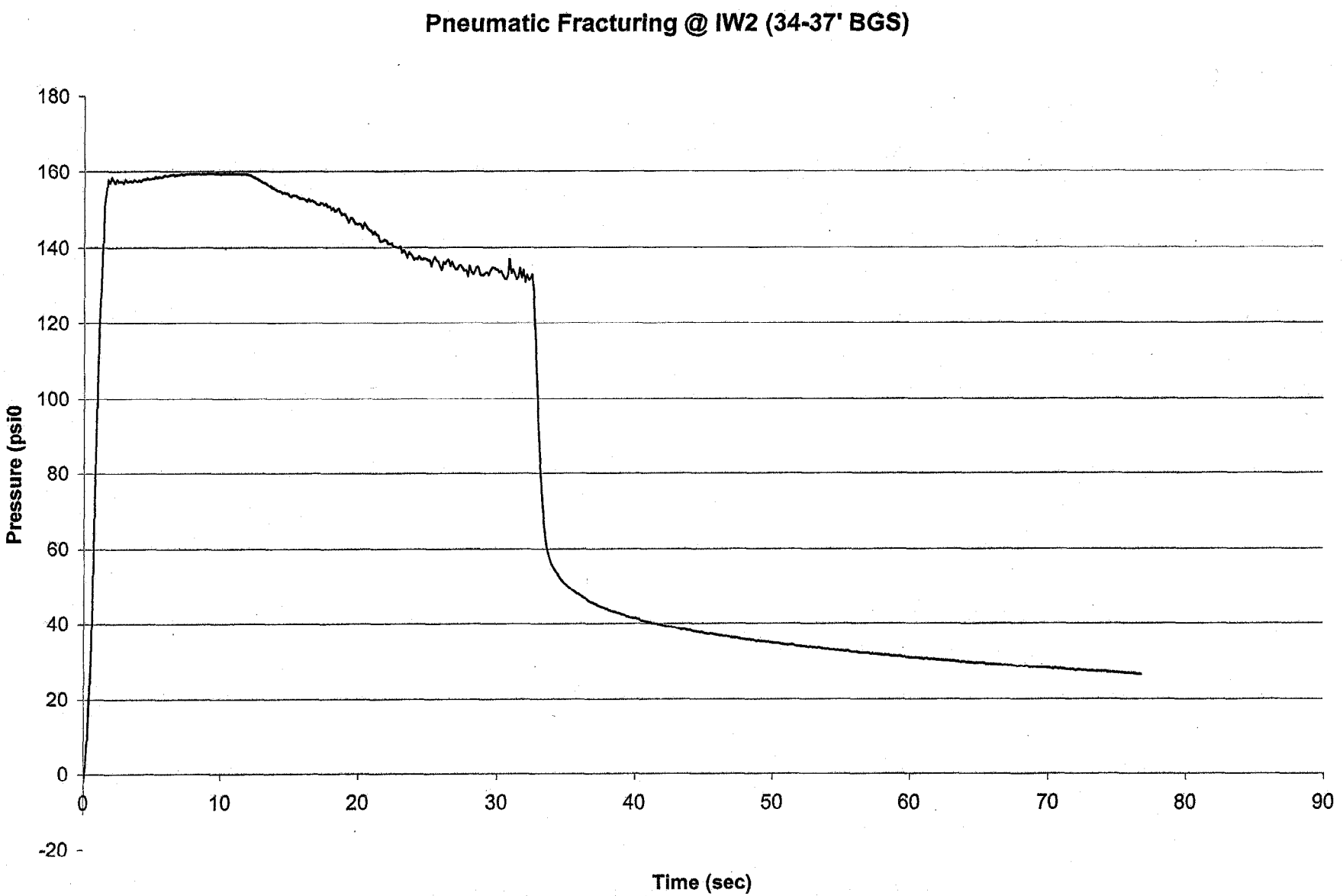
Pneumatic Fracturing @ IW2 (34-37' BGS)
Pressure (psi0
Time (sec)
180
160
140
120
100
80
60
40
20
0
-20
0
10
20
30
40
50
60
70
80
90

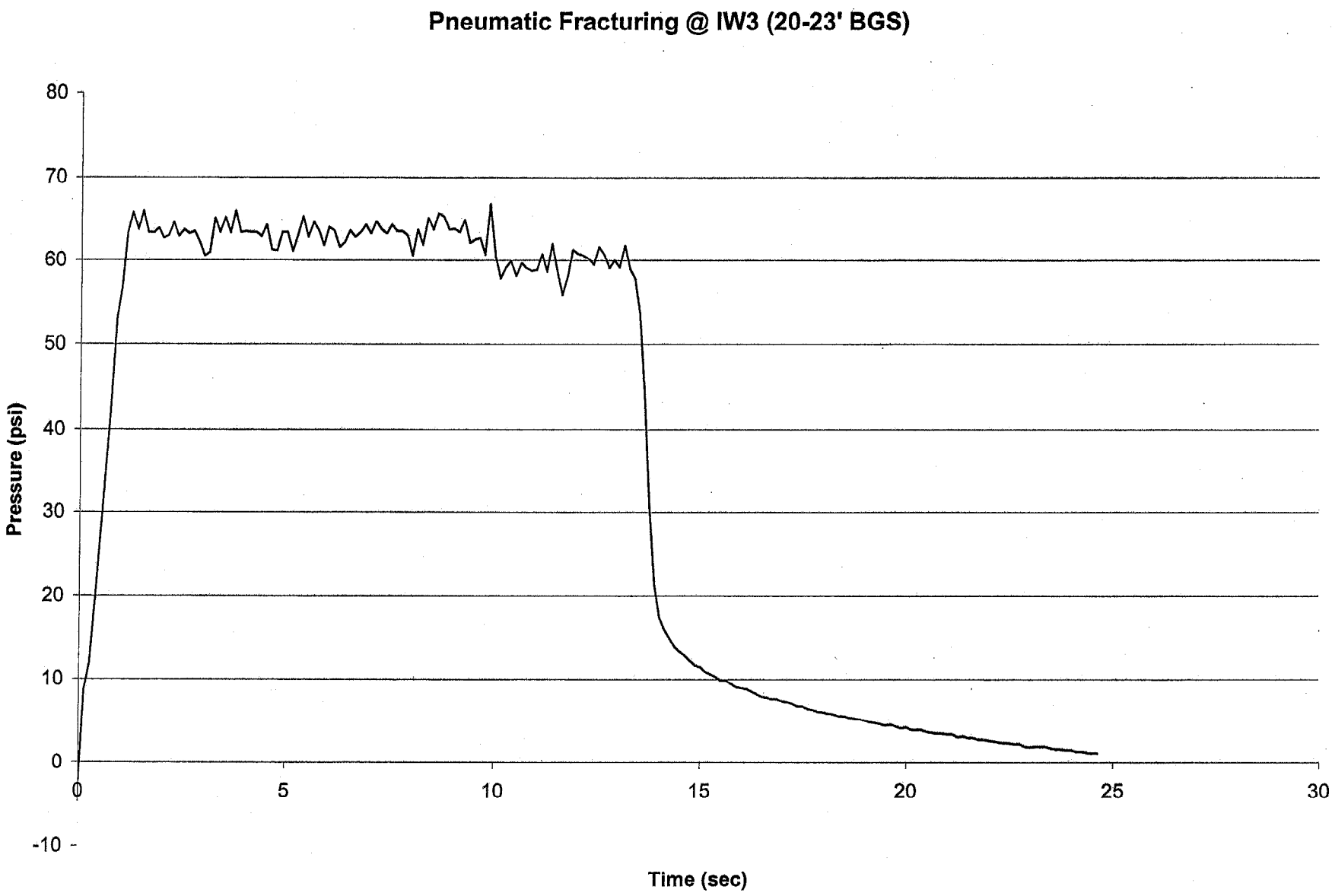
Pneumatic Fracturing @ IW3 (20-23' BGS)
Pressure (psi)
80
70
60
50
40
30
20
10
0
-10
0
5
10
15
20
25
30
Time (sec)

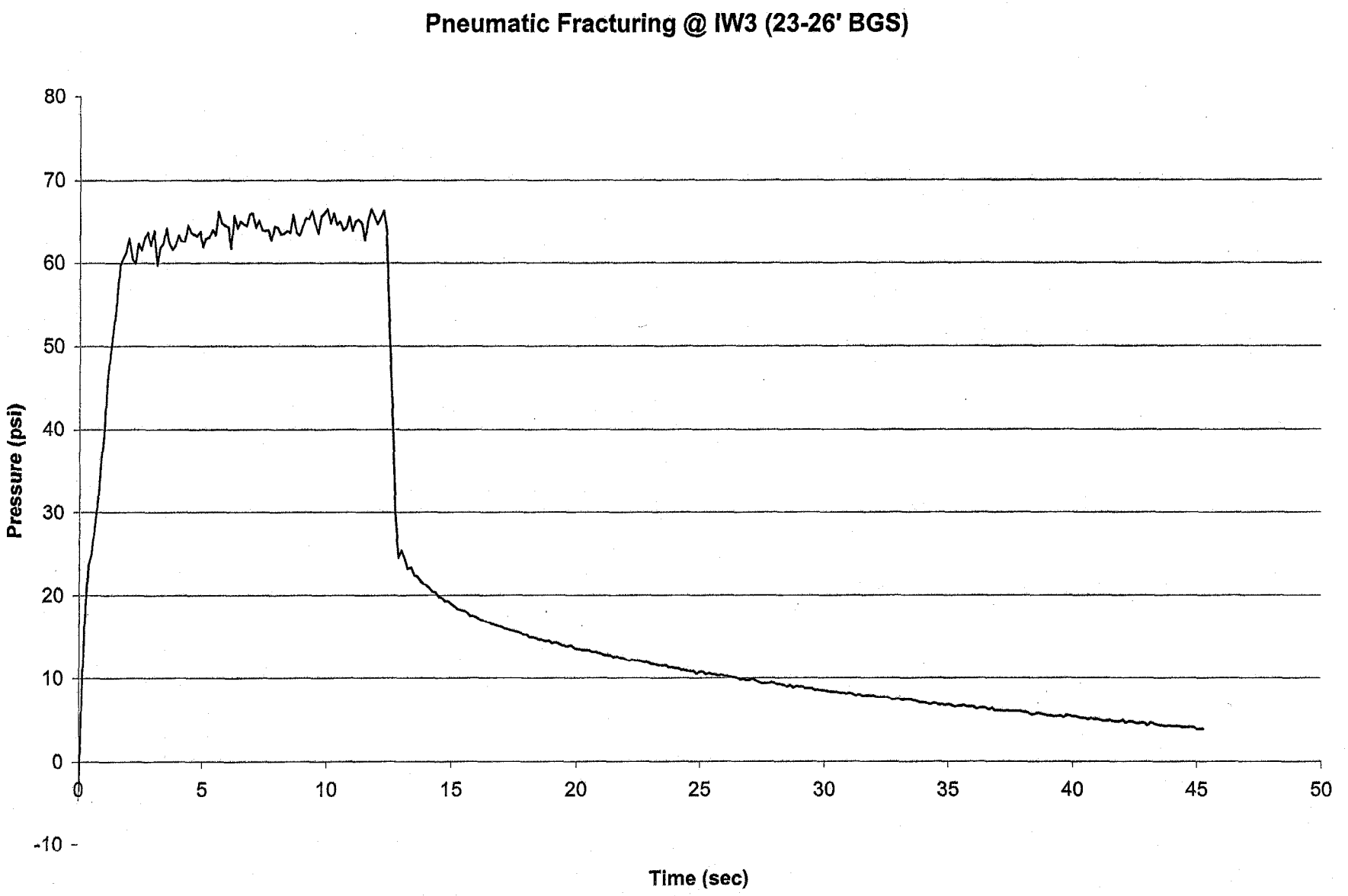
Pneumatic Fracturing @ IW3 (23-26' BGS)
Pressure (psi)
80
70
60
50
40
30
20
10
0
-10
0
5
10
15
20
25
30
35
40
45
50
Time (sec)

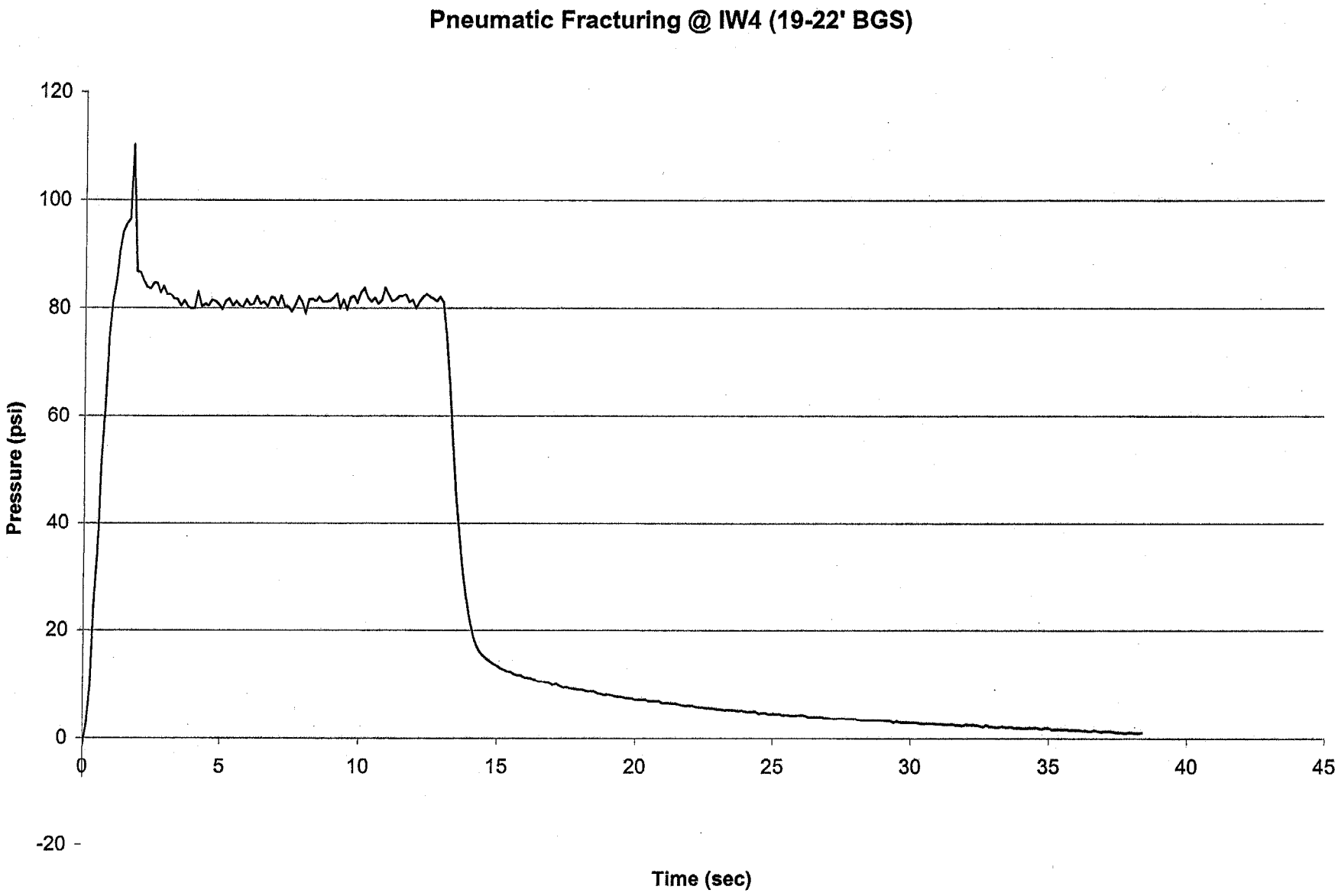
Pneumatic Fracturing @ IW4 (19-22' BGS)
Pressure (psi)
120
100
80
60
40
20
0
-20
0
5
10
15
20
25
30
35
40
45
Time (sec)

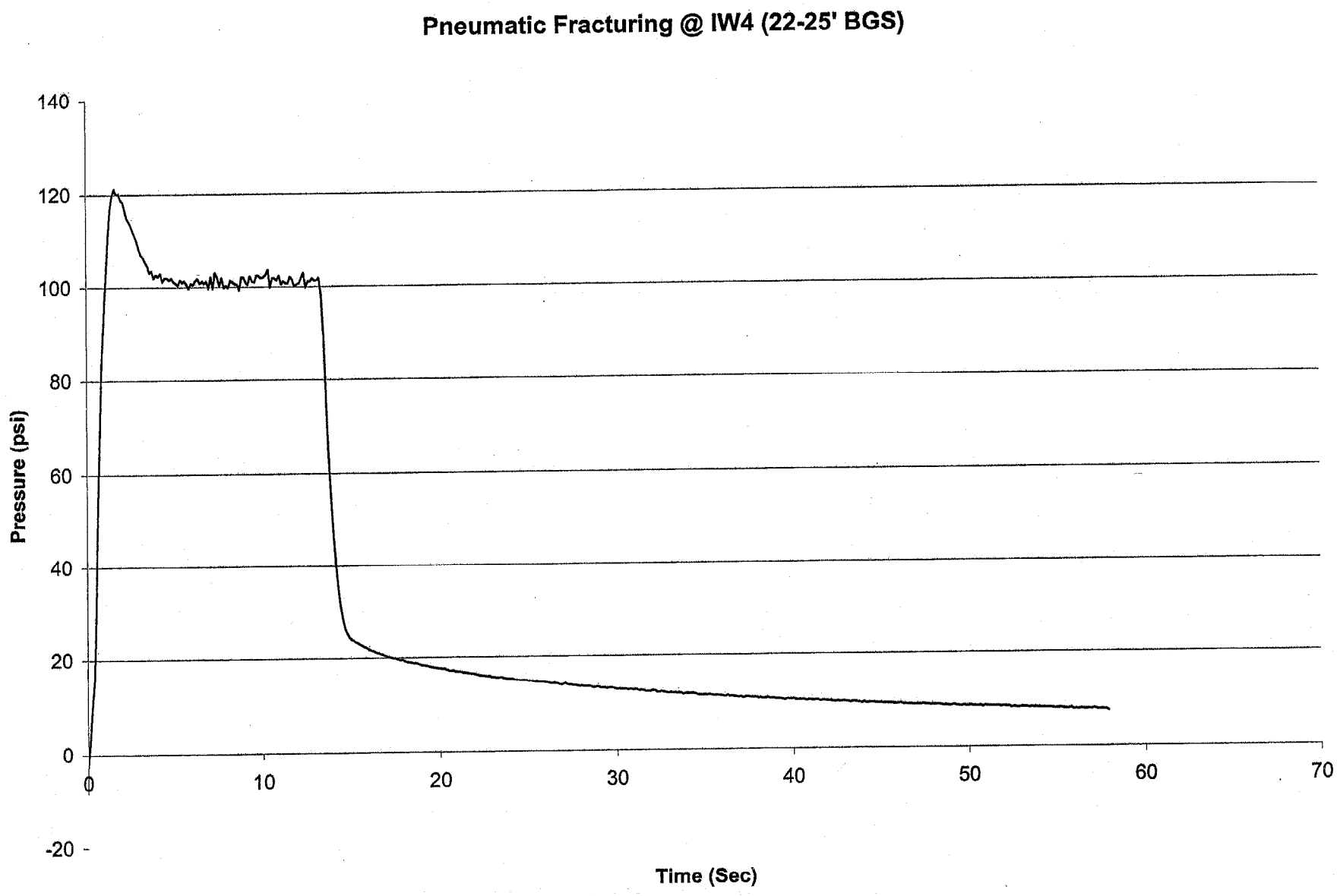
Pneumatic Fracturing @ IW4 (22-25' BGS)
Pressure (psi)
140
120
100
80
60
40
20
0
-20
0
10
20
30
40
50
60
70
Time (Sec)

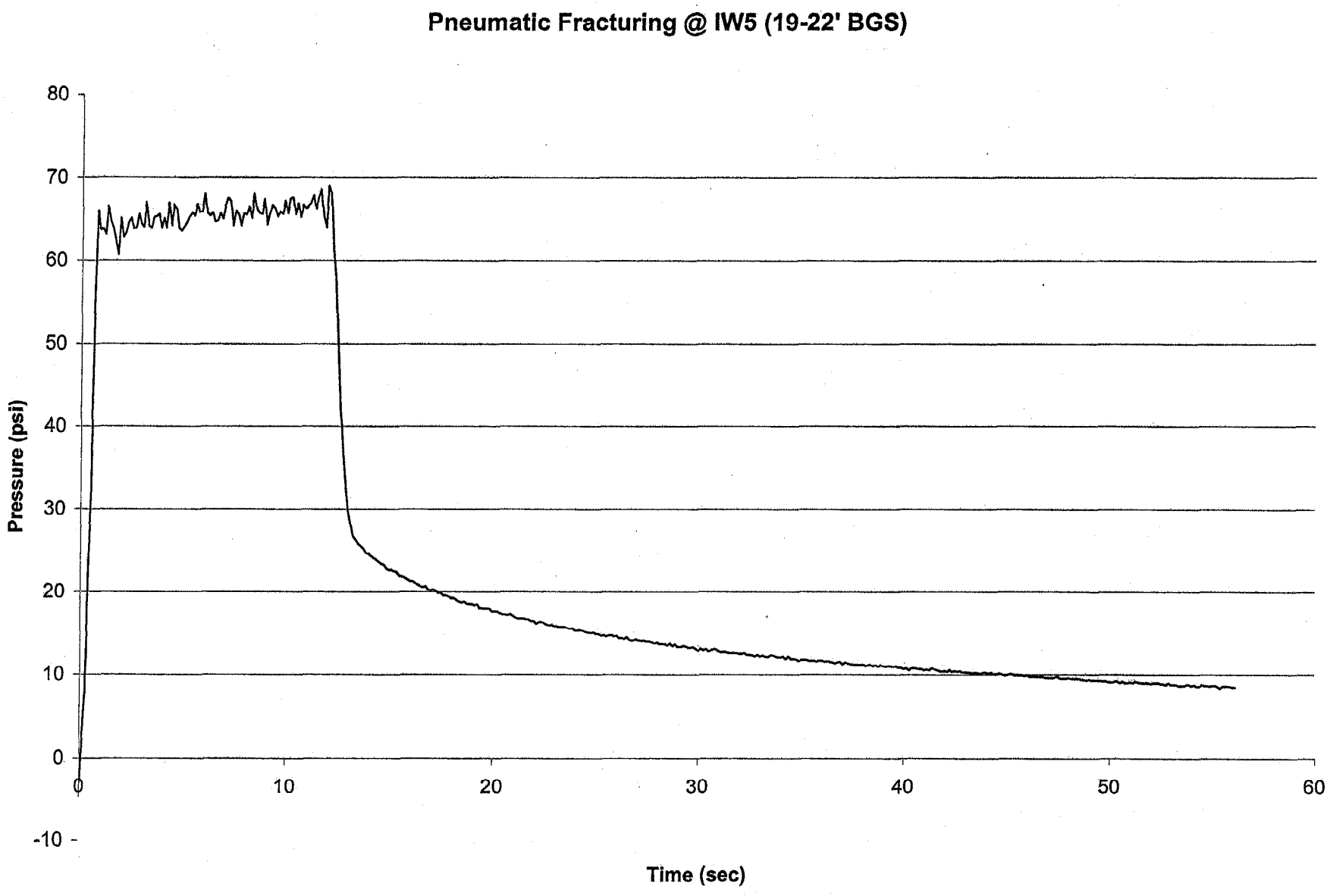
Pneumatic Fracturing @ IW5 (19-22' BGS)
Pressure (psi)
80
70
60
50
40
30
20
10
0
-10
0
10
20
30
40
50
60
Time (sec)

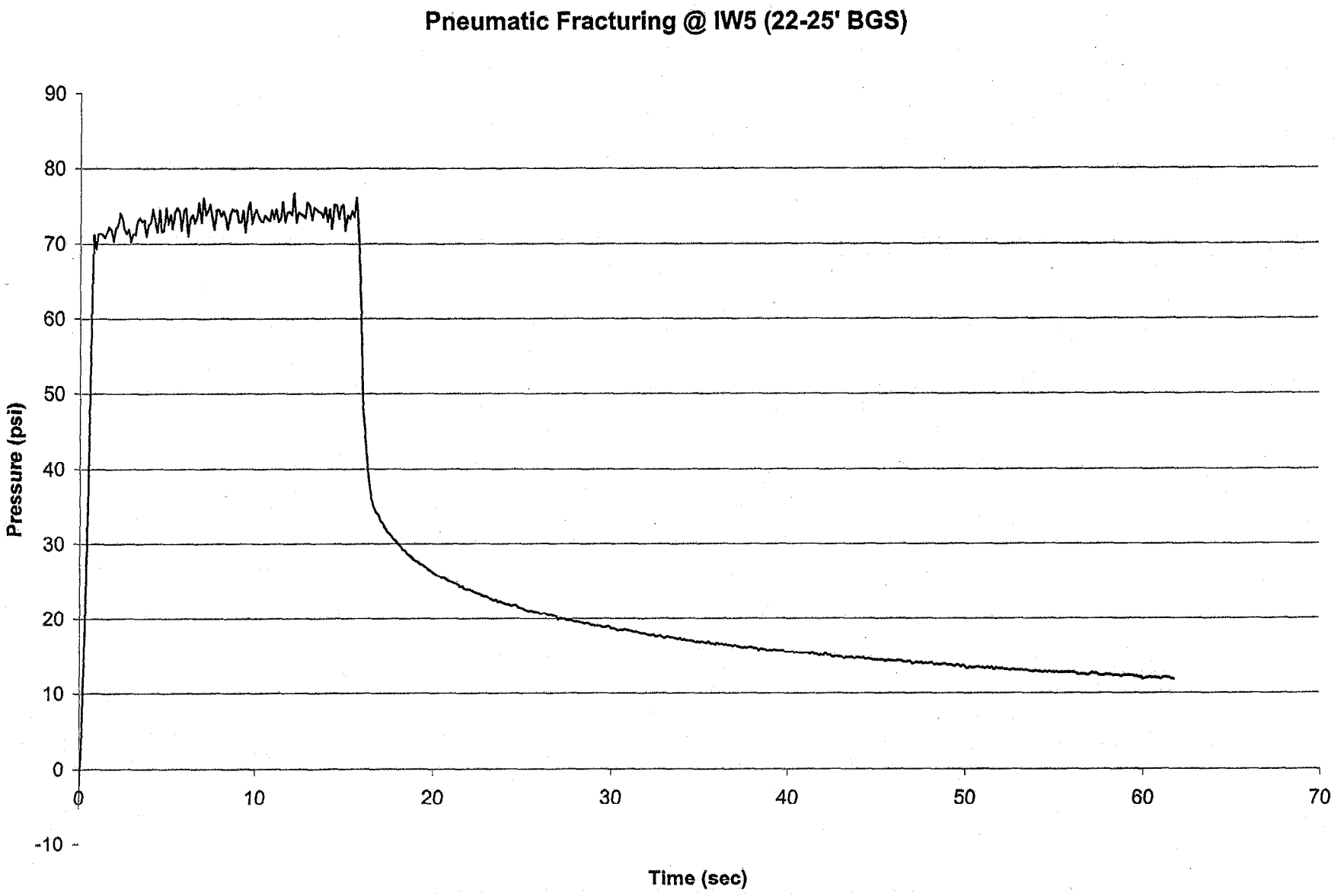
Pneumatic Fracturing @ IW5 (22-25' BGS)
Pressure (psi)
90
80
70
60
50
40
30
20
10
0
-10
0
10
20
30
40
50
60
70
Time (sec)

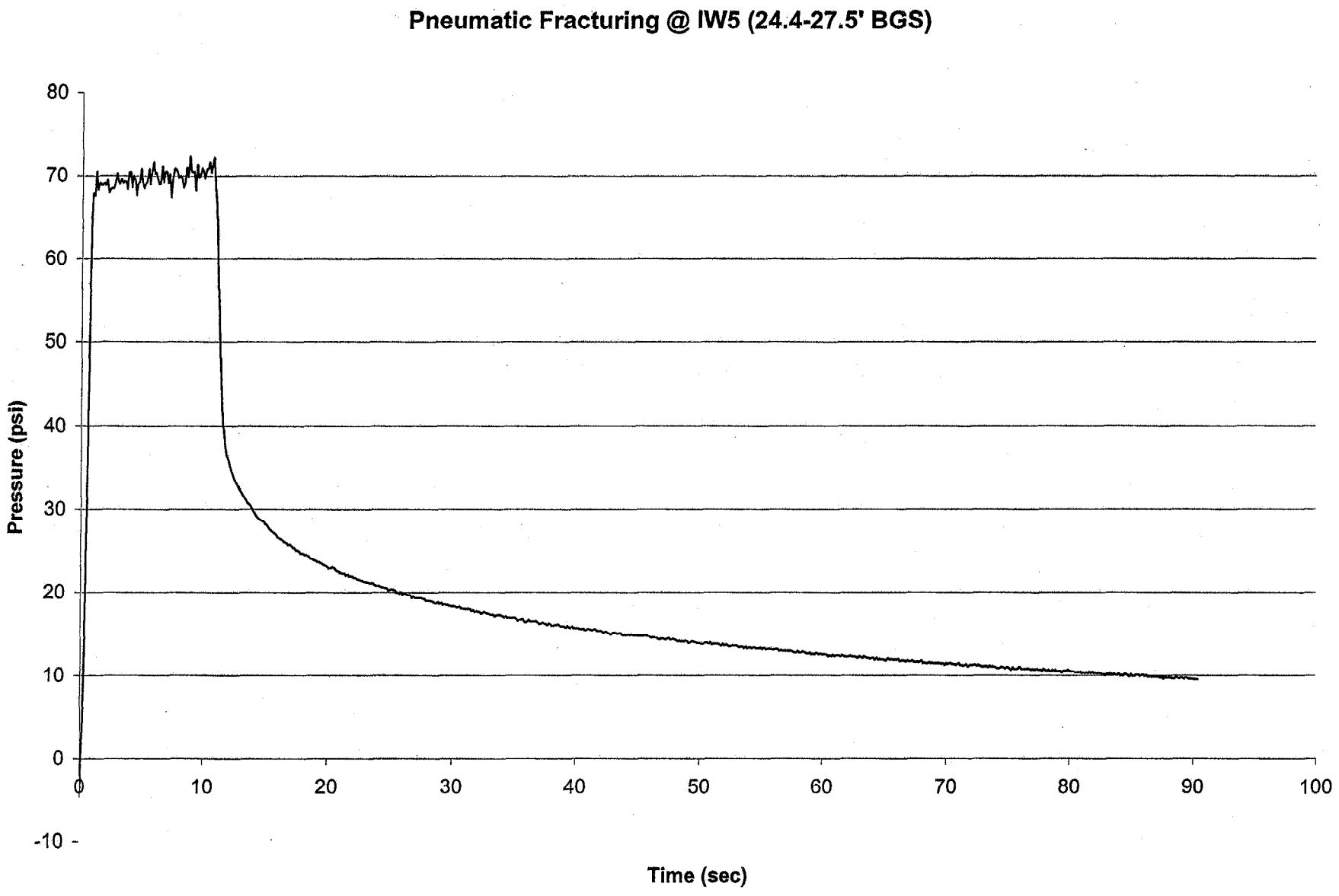
Pneumatic Fracturing @ IW5 (24.4-27.5' BGS)
Pressure (psi)
80
70
60
50
40
30
20
10
0
-10
0
10
20
30
40
50
60
70
80
90
100
Time (sec)

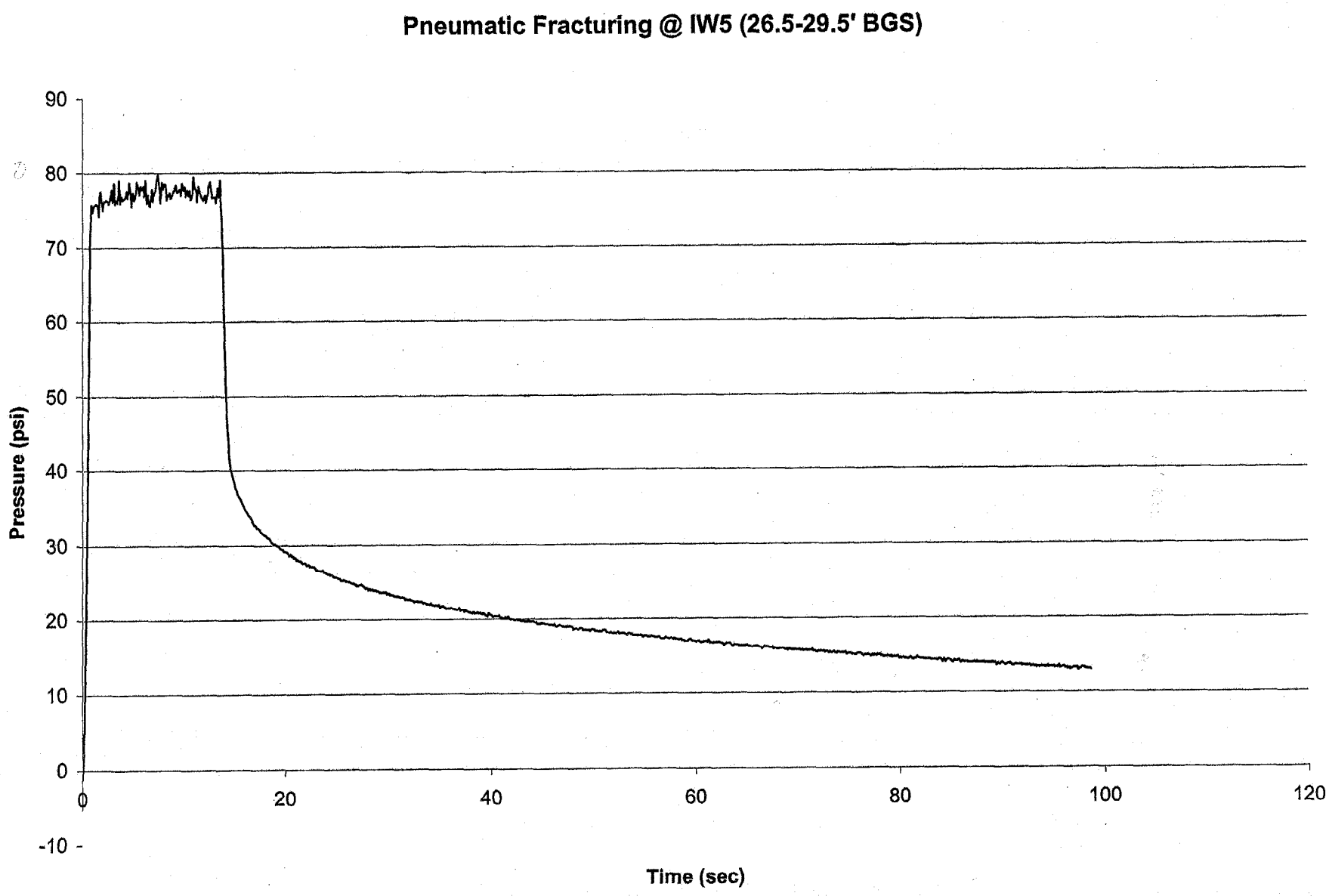
Pneumatic Fracturing @ IW5 (26.5-29.5' BGS)
Pressure (psi)
90
80
70
60
50
40
30
20
10
0
-10
0
20
40
60
80
100
120
Time (sec)