617ctb0093_2in.indd

Section: 03.04
Site 20903-5640 (White Oak)
Doc. #: 0003
00515

N60921.AR.000529
NSWC WHITE OAK
50903a

Final

Remedial Investigation Report
Site 49

Former NSWC White Oak
Silver Spring, Maryland

Prepared for

Department of the Navy
Engineering Field Activity Chesapeake
Naval Facilities Engineering Command

Contract No. N62470-95-D-6007
CTO-0093

May 2004

Prepared by

CH2MHILL

Section: 03.04
Site 20903-5640 (White Oak)
Doc. #: W/0003

CH2M HILL
13921 Park Center Road
Suite 600
Herndon, VA 20171
Tel 703.471.1441
Fax 703.471.1508

CH2MHILL

May 14, 2004
04-281-SJM

Attention: Code 181, Mr. Walter Legg
Chesapeake Division NFEC
Building 212, 1314 Harwood Street, SE
Washington DC 20374-5018

Dear Mr. Legg:

Subject: Final Remedial Investigation Report for Site 49, NSWC White Oak
Contract N62470-95-D-6007
Navy CLEAN II Program
Contract Task Order 0093

Enclosed for your review are three copies of the final Remedial Investigation for Site 49 at NSWC White Oak. Any questions can be directed to me at (703) 471-6405, extension 4332.

Sincerely,

CH2M HILL

Scott MacEwen, P.E.
Activity Manager

Enclosure
cc: Mr. Bruce Beach/USEPA Region III (3 copies)
Mr. Andy Zarins/MDE (2 copies)
Mr. Bob Ridgway/GSA/Alion (1 copy)
Mr. Dan Marren/AEDC (1 copy)
Mr. Phil Tully/Shaw (1 copy)
Mr. Steve Richards/GSA (1 copy)
Mr. Steve Hiortdahl/USGS (1 copy)
Mr. Scott Nesbit/Tetra Tech NUS (1 copy)
Mr. Paul Meyer/RAB/PG Co. DoH (1 copy)
Dr. Gary Irby/RAB (1 copy)
Dr. Paul DeLeo/RAB (1 copy)
Dr. Hall Cranell/RAB (1 copy)
Dr. John Tino/RAB (1 copy)
Information Repository (1 copy)
Mr. Jose Amaya/CH2M HILL (1 copy)
Ms. Brenda Smith/LANTDIV Code 02 (cover letter only)
CTO 093 File (1 copy)

Final

Remedial Investigation Report
Site 49

Former NSWC White Oak
Silver Spring, Maryland

Contract Task Order 0093

May 2004

Prepared for

Department of the Navy
Engineering Field Activity, Chesapeake
Naval Facilities Engineering Command

Under the

LANTDIV CLEAN II Program
Contract N62470-95-D-6007

Prepared by

CH2MHILL

Herndon, Virginia

Executive Summary

This remedial investigation (RI) report is submitted to Department of the Navy, Engineering Field Activity, Chesapeake (EFA CHES), Naval Facilities Engineering Command (NAVFAC) under the Atlantic Division (LANTDIV) Comprehensive Long-Term Action Navy (CLEAN) II Program, Contract No. N62470-95-D-6007. The RI was conducted at Site 49, located at the former Naval Surface Warfare Center White Oak (NSWC–White Oak) in Silver Spring, Maryland.

The RI was conducted in response to the closure of NSWC–White Oak under the Base Realignment and Closure (BRAC) program. The investigation was implemented in accordance with the process outlined in the Navy's Installation Restoration (IR) Program which is consistent with the National Contingency Plan (NCP) and Section 120 of the Comprehensive Environmental Response, Compensation, and Liability Act (CERCLA) as amended by the Superfund Amendments and Reauthorization Act (SARA). The regulatory basis for the process is described further in the latest version of the BRAC Cleanup Plan (BCP) for NSWC–White Oak (Department of the Navy, 1999).

Site 49 is considered the area of groundwater contamination with TCE that originates in the vicinity of Building 427 at the eastern end of the Arnold Engineering Development Center (AEDC) in the north-central portion of the NSWC White Oak. The site is approximately 5 acres in area. While it is not considered part of Site 49, the area of the investigation also included a 900-foot-long section of Paint Branch, from approximately 200 feet north of Perimeter Road Bridge to approximately 200 feet south of the Dahlgren Road bridge.

This report presents the data collected during the RI and an interpretation and evaluation of the data relating to the nature and extent of contamination (i.e., contaminant types, concentrations, distribution, and migration pathways) for the affected media, including soil, groundwater, and surface water. In addition, the report presents an assessment of potential risks to human health associated with current site conditions.

Objectives of the Remedial Investigation

The RI was conducted in response to the closure of NSWC–White Oak under the BRAC program. The specific objectives of the RI were to:

- Characterize the hydrogeologic framework and the nature and extent of groundwater contamination at Site 49.
- Determine if there is a continuing source of groundwater contamination remaining in the unsaturated zone soil.
- Identify and characterize the hydrogeologic factors affecting the transport of groundwater contamination in subsurface materials and subsequent discharge to Paint Branch.

- Determine the potential for, and quantify risks to, human health based on exposure to soil, groundwater, and/or surface water at Site 49;

Physical Characteristics of Site 49

Site 49 is located at the eastern edge of the AEDC. The topography in this portion of NWSC-White Oak contains considerable relief. The western portions of Site 49, associated with AEDC, including Building 427, are relatively flat. The central and eastern portions of Site 49 include a steep-sided ravine formed by Paint Branch. The total elevation drop from west to east across Site 49 is approximately 100 feet.

Site 49 is located near the Fall Line marking the western extent of the Atlantic Coastal Plain and the unconformable contact with the Piedmont Province bedrock units. The Atlantic Coastal plain is underlain by the metasedimentary Wissahickon Schist formation. The Wissahickon bedrock has been heavily weathered to form a mantle of saprolite The Atlantic Coastal Plain deposits include several formations composed of unconsolidated, interbedded clays, silts, sands, and gravels.

The hydrogeology of Site 49 is dominated by the saprolite-bedrock units. The Atlantic Coastal Plain sediments are present as a relatively thin veneer that is either unsaturated or has only a small saturated thickness. Groundwater is present as an unconfined water table aquifer in which the water table is located in the bedrock in the western portion of the Site and in both the saprolite and bedrock in the eastern portion, approaching Paint Branch. Groundwater flows to the east in response to hydraulic gradients. In addition, there appears to be a strong downward component of flow in the west and central portion of the site and an upward component of flow in the east, indicating groundwater discharge to Paint Branch.

Nature and Extent of Contamination

The primary contaminants found in the environment at Site 49 are chlorinated solvents: trichloroethene (TCE) and its likely degradation products, *cis*-1,2-dichloroethene (cis-DCE) and vinyl chloride (VC) occurring in groundwater. Soil was investigated in order to determine if a source of the TCE in groundwater could be identified, and not because of a known release to the soil. Investigation of soil conditions and potential source areas found no significant sources for the TCE remaining in soil.

Soil Data Summary

- Tetrachloroethene (PCE) was detected at very low concentrations in seven samples from three boring locations. Other volatile organic compounds (VOCs) were detected sporadically throughout the site and at very low concentrations.
- Semivolatile organic compounds (SVOCs) were detected throughout the site at low concentrations. One boring, 459SB201, contained the greatest number of individual SVOCs and most of the maximum detected concentrations.
- Metals were detected in all soil samples. Each soil sample contained metals at concentrations that exceeded the 95 percent upper confidence level (UCL) for

background. However, the variability in concentrations detected in Site 49 samples appears to be consistent with variability expected in natural soils, based on the background data set and regional-scale reference data sets.

- Two pesticides, 4,4'-DDT and dieldrin, were detected at low concentrations.
- Explosives and PCBs were not detected in any soil samples.

Groundwater Data Summary

- TCE and its breakdown products were detected throughout Site 49. Concentrations generally increase with distance from the postulated source near Building 427 and with depth. Concentrations exhibit mixed behavior with time, as concentrations in some horizons increased while other decreased during subsequent sampling events.
- SVOCs, pesticides, PCBs, explosives, and perchlorate were not detected at significant concentrations, nor with significant frequency. Accordingly, no anthropogenic influences from these chemicals appear to affect Site 49 groundwater quality.
- Metals were detected in both filtered and unfiltered samples of groundwater. The metals detected were consistent with those detected in soil, surface water, and with the expected geochemical signatures for natural groundwater in this environment. The concentrations of detected metals did not exceed the USEPA MCLs.

Surface Water Summary

Surface water quality data from Paint Branch adjacent to Site 49 are consistent with the background data set discussed in the BIR and show no anthropogenic influences from Site 49. In addition, surface water geochemical data are similar to the inorganic geochemistry of groundwater at Site 49. The absence of detectable concentrations of the VOCs detected in Site 49 groundwater indicate that any groundwater contamination discharged to Paint Branch is a transient phenomenon that has no adverse effect on surface water quality.

Fate and Transport

The following conclusions regarding the fate and transport of contaminants at Site 49:

- One general source area has been identified in the vicinity of Building 427, likely at the former leaching well. Data collected during this investigation identified TCE and its degradation products at concentrations in the thousands of micrograms per liter in groundwater. This information, along with water-level data, confirms that TCE contamination originating from the presumed source area is migrating easterly, towards Paint Branch.
- It appears that a significant volume of mass has migrated from Building 427 to Paint Branch. The portion this volume represents relative to the total volume, is unknown because the initial mass is unknown. Further, the complexity of the flow system decreases the uniformity of the plume and limits the characterization process.

- Natural attenuation likely is occurring at Site 49; however, it is not considered significant, given the TCE concentrations observed in samples collected from wells located near Paint Branch, the relatively low detected concentrations of its breakdown products, and the complexity of the flow system.

Human Health Risk Assessment

This baseline risk assessment was conducted to evaluate the potential human health risks associated with the site-related contamination for:

- surface water in Paint Branch, and
- bedrock groundwater.

Soil was not evaluated in the risk assessment because Site 49 was initially identified as a groundwater contamination site and, during subsequent sampling, none of the contaminants of potential concern (COPC) in groundwater could be found in the soil. With the concurrence of the BRAC Cleanup Team (BCT) for NSWC White Oak, potential risks associated with soil were not quantified. Furthermore, no discernable area of waste disposal has been identified in the soil at the site (based on site data and historic records searches) that can be attributed as the source of the VOCs found in groundwater.

Surface water data was screened against human health risk-based screening criteria. No COPCs were retained for Paint Branch surface water, and, therefore, no unacceptable risks are associated with this medium.

Potential risks associated with bedrock groundwater were calculated for the following populations:

- future adult resident,
- future child resident,
- future lifetime resident, and
- future construction worker.

The risk assessment quantifies potential human health risks at Site 49 under current and future use scenarios assuming no remediation is implemented.

The groundwater presents carcinogenic risks and non-carcinogenic hazards greater than the USEPA target levels. The following receptors have total reasonable maximum exposure (RME) non-carcinogenic hazards or carcinogenic risks that exceeded USEPA's target levels:

- a future residential adult and child exposed to groundwater,
- a future construction worker exposed to groundwater.

The central tendency (CT) risks for the residential scenarios also exceeded USEPA target levels.

The majority of the risk from the groundwater is associated with TCE, cis-DCE, 1,2-dibromoethane (which was detected in only 1 of 16 groundwater samples), PCE, and VC. Chromium, iron, manganese, and vanadium also contribute to the risks and hazards, but to a much lesser extent.

Ecological Risk Assessment

Risks to ecological receptors were not evaluated as part of this RI. The media affected at Site 49 is groundwater, for which there are no ecological receptors. The pathway for contaminant migration to the groundwater was, in all likelihood, through a leaching well or building sump, and therefore would not involve impacts to soil near the ground surface where risks to ecological receptors would be an issue. Ecological risks from the surface water and sediment in the section of Paint Branch potentially affected by Site 49 have already been evaluated in a separate base-wide Ecological Risk Assessment (ERA). The surface water data collected during the Site 49 RI were consistent with prior data collected at this same location and used in the base-wide ERA. No chlorinated VOCs or other site-related contaminants with the exception of iron, were detected in the surface water. However, iron as well as all of the non-site-related compounds (i.e.: metals) detected in the surface water were below the White Oak-specific ecological screening criteria established for Paint Branch in the base-wide ERA.

Contents

Executive Summary iii

Acronyms and Abbreviations xiii

1 Introduction 1-1
- 1.1 Objectives of the Remedial Investigation 1-1
- 1.2 Purpose of the Remedial Investigation Report 1-2
- 1.3 Organization of the Remedial Investigation Report 1-2
- 1.4 Site Description, Site History, and Results of Previous Investigations 1-3

2 Remedial Investigation Activities 2-1
- 2.1 Leaching Well Excavation 2-1
- 2.2 Building 427 Visual Inspection 2-1
- 2.3 Building 427 Sump Perimeter Drain/Manhole Sampling 2-2
- 2.4 Soil Sampling 2-3
- 2.5 *In Situ* Groundwater Sampling 2-3
- 2.6 Permanent Monitoring Well Installation 2-4
- 2.7 Packer Testing and Sampling 2-4
- 2.8 Monitoring Well Sampling 2-5
- 2.9 Surface Water Sampling 2-5
- 2.10 Surveying 2-6

3 Physical Characteristics of Site 49 3-1
- 3.1 Physiography, Topography, and Climate 3-1
- 3.2 Hydrology 3-1
- 3.3 Soil 3-2
- 3.4 Geology 3-2
  - 3.4.1 Regional Geology 3-3
  - 3.4.2 Site 49 Geology 3-3
- 3.5 Hydrogeology 3-4
  - 3.5.1 Regional Hydrogeology 3-4
  - 3.5.2 Site 49 Hydrogeology 3-4
- 3.6 Conceptual Model of Groundwater Flow and Groundwater-Surface Water Interactions 3-5

4 Nature and Extent of Contamination 4-1
- 4.1 Data Presentation and Evaluation 4-1
  - 4.1.1 Data Presentation 4-1
  - 4.1.2 Data Evaluation 4-1
- 4.2 Perimeter Drain Samples 4-2
- 4.3 Soil 4-2
  - 4.3.1 Volatile Organic Compounds 4-2
  - 4.3.2 Explosives 4-2
  - 4.3.3 Pesticides and PCBs 4-2
  - 4.3.4 Semivolatile Organic Compounds 4-3

4.3.5 Metals 4-3
4.3.6 Soil Data Summary 4-4
4.4 Groundwater 4-5
4.4.1 Volatile Organic Compounds (VOCs) 4-5
4.4.2 SVOCs, Pesticides, and PCBs 4-6
4.4.3 Metals 4-7
4.4.4 Explosives and Perchlorate 4-8
4.4.5 Groundwater Summary 4-9
4.5 Surface Water 4-9
4.5.1 Volatile Organic Compounds 4-9
4.5.2 Semivolatile Organic Compounds 4-9
4.5.3 Metals 4-9
4.5.4 Surface Water Summary 4-10

5 Fate and Transport 5-1
5.1 Site Contaminants and Their Properties 5-1
5.1.1 Physical-chemical Properties of TCE 5-2
5.1.2 Biodegradation of Chlorinated Hydrocarbons. 5-3
5.2 Contaminant Migration and Fate in the Vadose Zone 5-4
5.3 Contaminant Migration and Fate in the Saturated Zone 5-5
5.4 Conceptual Model of Contaminant Transport 5-9
5.5 Summary of Fate and Transport Conclusions 5-10

6 Baseline Human-Health Risk Assessment 6-1
6.1 Introduction 6-1
6.2 Identification of Chemicals of Potential Concern 6-2
6.2.1 Data Evaluation and Selection 6-2
6.2.2 Data Summary 6-3
6.2.3 Selection of Chemicals of Potential Concern (COPCs) 6-3
6.2.4 Chemicals of Potential Concern 6-4
6.3 Exposure Assessment 6-4
6.3.1 Characterization of Exposure Setting 6-4
6.3.2 Identification of Exposure Pathways 6-5
6.3.3 Quantification of Exposure 6-7
6.4 Toxicity Assessment 6-9
6.4.1 Toxicity Information for Non-carcinogenic Effects 6-10
6.4.2 Toxicity Information for Carcinogenic Effects 6-10
6.4.3 Chemicals for Which no USEPA Toxicity Values Are Available 6-11
6.4.4 Toxicity Profiles of Selected Chemicals 6-11
6.5 Risk Characterization 6-11
6.5.1 Non-carcinogenic and Carcinogenic Risk Estimation Methods 6-12
6.5.2 Risk Assessment Results 6-13
6.6 Uncertainty Associated with Human Health Assessment 6-14
6.6.1 General Uncertainty in COPC Selection 6-15
6.6.2 Uncertainty Associated with Exposure Assessment 6-15
6.6.3 Uncertainty Associated with Toxicity Assessment 6-15
6.6.4 Uncertainty in Risk Characterization 6-16
6.6.5 Comparison of COPCs to Background Concentrations 6-16

6.7 Summary 6-17

7 Ecological Risk Assessment 7-1

8 Summary and Conclusions 8-1
8.1 Objectives of the Remedial Investigation 8-1
8.2 Physical Characteristics of Site 49 8-1
8.3 Nature and Extent of Contamination 8-2
8.3.1 Soil Data Summary 8-2
8.3.2 Groundwater Data Summary 8-2
8.3.3 Surface Water Summary 8-3
8.4 Fate and Transport 8-3
8.5 Human Health Risk Assessment 8-3
8.6 Ecological Risks 8-4

9 References 9-1

Appendixes

A Leaching Well Excavation Photographs
B Building 427 Photographs
C Building 427 Architectural and Construction Drawings
D Boring Logs
E Well Completion Diagrams
F Field Data
G Survey Report
H Human Health Risk Assessment Tables
I Complete Analytical Data Tables

Tables (Tables are located at the end of each section)

2-1 Analysis Methods

3-1 Summary of Geologic Units

4-1 Detections in Sump and Manhole Water Samples
4-2 Detections in Soil Samples
4-2a Soil Minimum and Maximum Detected Concentrations, 95% UCLs for Background Data, Frequency of Detection, and the Frequency at Which the Detected Concentrations Exceed the 95% UCL for Background
4-3 Detections in Groundwater Samples from Drive Points along Point Branch Bed
4-3a Detections in Groundwater Samples from Temporary Wells
4-4 Detections in Monitoring Well Samples
4-5 Detections in Borehole Water Samples During Packer Test
4-6 Detections in Paint Branch Surface Water Samples

5-1 Physical, Chemical, and Half-Life Data of Representative Chemicals

6-1 Samples Evaluated in Human Health Risk Assessment
6-2 Comparison of Intakes of Human Nutrients to Recommended Daily Allowances

6-3 Chemicals of Potential Concern
6-4 Summary of Exposure Pathways to be Evaluated During the Risk Assessment
6-5 Dermal Worksheet
6-6 Summary of RME Cancer Risks and Hazard Indices
6-7 Summary of CT Cancer Risks and Hazard Indices

7-1 Detections In Paint Branch Surface Water Samples and Exceedances of Ecological Risk Screening Criteria

Figures (Figures are located at the end of each section)

1-1 Regional Map
1-2 Site Location Map
1-3 Site 49 Site Map
1-4 Pre-RI Sample Locations

2-1 Sampling Locations
2-2 Packer Test Intervals and Monitoring Well Screen Intervals of 49GW201DD and 49GW206D

3-1 Site Topography
3-2 Cross-Section Location
3-3 Hydrogeologic Cross Section A-A'
3-4 Water Table Contours
3-5 Schematic Hydrogeologic Cross-Section

4-1 TCE in Shallow Groundwater—June 2002
4-2 TCE in Shallow Groundwater—August 2002
4-3 TCE in Shallow Groundwater—October 2002
4-4 Site 49 Conceptual Isoconcentrations for TCE in Shallow Groundwater
4-5 TCE in Deeper Groundwater, June 2002 through February 2003
4-6 Iron in Groundwater

5-1 Environmental Fate of Chlorinated Solvents

6-1 Conceptual Site Model for Potential Human Exposures

Acronyms and Abbreviations

AEDC	Arnold Engineering Development Center
ATSDR	Agency for Toxic Substances and Disease Registry
BCP	BRAC Cleanup Plan
BCT	BRAC Cleanup Team
bgs	below ground surface
BRAC	the Base Realignment and Closure
CERCLA	Comprehensive Environmental Response, Compensation, and Liability Act
CLEAN	Comprehensive Long-Term Environmental Action Navy
COPC	Chemical of Potential Concern
CSF	cancer slope factor
CT	central tendency
DL	detection limit
DNAPL	dense non-aqueous phase liquid
DO	dissolved oxygen
DP	direct-push
DQO	Data Quality Objective
EFA CHES	Engineering Field Activity, Chesapeake
°F	degrees Fahrenheit
ft/min	feet per minute
GPS	Global Positioning System
GSA	General Services Administration
HEAST	Health Effects Assessment Summary Table
HI	hazard index
HLC	Henry's Law Constant
HQ	hazard quotient
HSA	hollow-stem auger
ID	inner diameter
IR	Installation Restoration
IRIS	Integrated Risk Information System
LANTDIV	Atlantic Division, Naval Facilities Engineering Command
LC	low concentration
LNAPL	light non–aqueous phase liquid
MF	modifying factor
mg/kg	milligrams per kilogram
mg/L	milligrams per liter
MO	monooxygenase
mph	miles per hour

msl	mean sea level
mV	millivolts
µg/L	micrograms per liter
NAPL	non–aqueous phase liquid
NAVFAC	Naval Facilities Engineering Command
NCEA	National Center for Environmental Assessment
NCP	National Contingency Plan
NSWC	Naval Surface Warfare Center
ORP	oxidation-reduction potential
PAH	polycyclic aromatic hydrocarbon
PCB	polychlorinated biphenyl
PCE	tetrachloroethylene
PID	photoionization detector
ppb	part per billion
PVC	polyvinyl chloride
RAGS	Risk Assessment Guidance for Superfund
RCRA	Resource Conservation and Recovery Act
RDA	Recommended Dietary Allowance
RfD	reference dose
RI	Remedial Investigation
RME	reasonable maximum exposure
SARA	Superfund Amendments and Reauthorization Act
SOP	Standard Operating Procedure
SPT	Standard Penetration Test
SQL	sample quantitation limit
SVOC	semivolatile organic compound
TAL	Target Analyte List
TCE	trichloroethylene
TCL	target compound list
TOC	total organic carbon
UCL	upper confidence limit
UF	uncertainty factor
USEPA	U.S. Environmental Protection Agency
UTL	upper tolerance limit
VOC	volatile organic compound
WSSC	Washington Suburban Sanitation Commission

SECTION 1

Introduction

This remedial investigation (RI) report is submitted to Department of the Navy, Engineering Field Activity, Chesapeake (EFA CHES), Naval Facilities Engineering Command (NAVFAC) under the Atlantic Division (LANTDIV) Comprehensive Long-Term Action Navy (CLEAN) II Program, Contract No. N62470-95-D-6007. The RI was conducted at Site 49, located at the former Naval Surface Warfare Center White Oak (NSWC–White Oak) in Silver Spring, Maryland (Figure 1-1).

The RI was conducted in response to the closure of NSWC–White Oak under the Base Realignment and Closure (BRAC) program. The investigation was implemented in accordance with the process outlined in the Navy's Installation Restoration (IR) Program which is consistent with the National Contingency Plan (NCP) and Section 120 of the Comprehensive Environmental Response, Compensation, and Liability Act (CERCLA) as amended by the Superfund Amendments and Reauthorization Act (SARA). The regulatory basis for the process is described further in the latest version of the BRAC Cleanup Plan (BCP) for NSWC–White Oak (Department of the Navy, 1999).

Site 49 is considered the area of groundwater contamination with TCE that originates in the vicinity of Building 427 at the eastern end of the Arnold Engineering Development Center (AEDC) in the north-central portion of the NSWC White Oak (Figure 1-2). The site is approximately 5 acres in area. While it is not considered part of Site 49, the area of the investigation also included a 900-foot segment of Paint Branch from approximately 200 feet north of Perimeter Road Bridge to approximately 200 feet south of the Dahlgren Road bridge (Figure 1-3).

1.1 Objectives of the Remedial Investigation

The RI conducted at Site 49 was intended to address the nature and extent of groundwater contamination beneath the site. The investigation was initiated based on data generated by the Washington Suburban Sanitation Commission (WSSC) sanitary sewer lines investigation (CH2M HILL, 2001), which identified contamination by volatile organic compounds (VOCs) in the groundwater adjacent to a sanitary sewer line. Surface water was evaluated to determine the effect(s), if any, contaminated groundwater originating from Site 49 may have on Paint Branch, the dominant groundwater discharge feature in the vicinity of the site. Soil at Site 49 was also evaluated in an attempt to identify potential source areas. The specific objectives of the RI were to:

- Characterize the hydrogeologic framework and the nature and extent of groundwater contamination at Site 49.
- Determine if there is a continuing source of groundwater contamination remaining in the unsaturated zone soil.

- Identify and characterize the hydrogeologic factors affecting the transport of groundwater contamination in subsurface materials and subsequent discharge to Paint Branch.
- Determine the potential for risks to human health, based on exposure to groundwater, and/or surface water at Site 49

Risks to ecological receptors were not evaluated as part of this RI. The media affected at Site 49 is groundwater, for which there are no ecological receptors. The pathway for contaminant (chlorinated solvents) migration to the groundwater was, in all likelihood, through a leaching well or building sump, and therefore would not involve impacts to soil near the ground surface where risks to ecological receptors would be an issue. Ecological risks from the surface water and sediment in the section of Paint Branch downgradient of Site 49 have already been evaluated in a separate base-wide Ecological Risk Assessment (ERA). The surface water data collected during the Site 49 RI were consistent with prior data used in the base-wide ERA. No chlorinated solvents or other site-related contaminants, with the exception of iron, were detected in the surface water. Iron, as well as all of the non-site-related compounds (i.e.: metals) detected in the surface water were below the White Oak-specific ecological screening criteria established for Paint Branch in the base-wide ERA.

1.2 Purpose of the Remedial Investigation Report

This report presents the data collected during the RI and an interpretation and evaluation of the data relating to the nature and extent of contamination (i.e., contaminant types, concentrations, distribution, and migration pathways) for the affected media, including soil, groundwater, and surface water. In addition, the report presents an assessment of potential risks to human health associated with current site conditions.

1.3 Organization of the Remedial Investigation Report

Chapter 1 is the introduction to the main body of the RI report. Chapter 2 provides descriptions of the various RI field activities conducted at Site 49. Chapter 3 provides detailed information on the natural environment including physiography, topography, climate, surface water, geology, and hydrogeology. Chapter 4 presents data pertaining to types, concentrations, and distribution of contaminants for affected media at Site 49. Chapter 5 provides an analysis of transport, fate, and migration pathways for the identified contaminants. Chapter 6 presents the baseline human-health risk assessment. Chapter 7 summarizes the ecological risks related to the site. Chapter 8 provides a summary of the report and presents conclusions and recommendations for future action at Site 49. Chapter 9 provides a list of the references cited throughout this report. Supporting information is provided in the Appendices. An Executive Summary is presented at the beginning of this report.

1.4 Site Description, Site History, and Results of Previous Investigations

Details of the administrative history of the NSWC–White Oak are provided in the Master Work Plans (Brown and Root Environmental, 1998) and are not repeated here. The Navy facility officially closed in mid-1997 following the 1995 BRAC Commission closure decisions. The majority of the former Navy facility was transferred to, and is currently managed by, the General Services Administration (GSA), in preparation for eventual reuse by other government agencies. A portion of the original Navy facility, including part of Site 49, currently is occupied by AEDC, which leases the property from GSA.

Contamination at Site 49 initially was identified during the sanitary sewer investigation noted above. Trichloroethene (TCE) was detected in groundwater samples collected using direct-push technology (DPT) on two occasions from one location (Manhole 32142; see Figure 1-4) within the backfill of WSSC sewers that run along Paint Branch hydraulically downgradient of AEDC. Groundwater samples collected from sewer bedding up- and down-pipe of AEDC did not contain TCE. A subsequent investigation using four temporary monitoring wells indicated that TCE was present in shallow groundwater at concentrations as great as 1,000 micrograms per liter (μg/L). The locations of the water samples and the samples collected from temporary monitoring wells are shown in Figure 1-4. Following a review of the temporary monitoring well data, this area was designated as Site 49.

File Path: v:\18gis\whiteoak\figures\site49_ri.apr

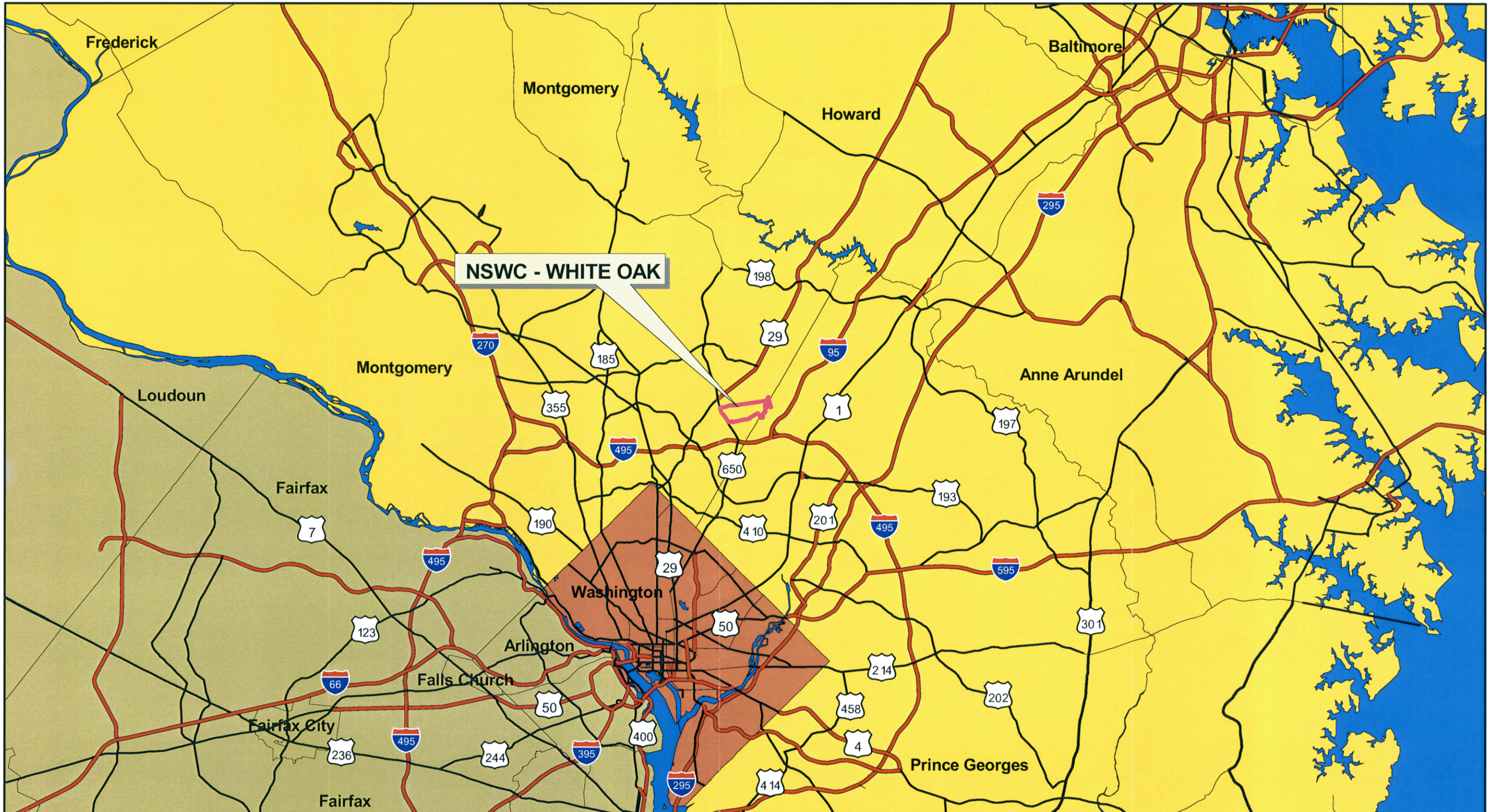

LEGEND

- Base Boundary
- Interstate, Freeway, or Expressway
- Water Bodies
- District of Columbia
- Maryland
- Virginia

N

0 20000 40000 Feet

Figure 1-1
Regional Map
Site 49 RI Report
NSWC - White Oak
Silver Spring, Maryland

CH2MHILL

File Path: v:\18gis\whiteoak\figures\site49_ri.apr

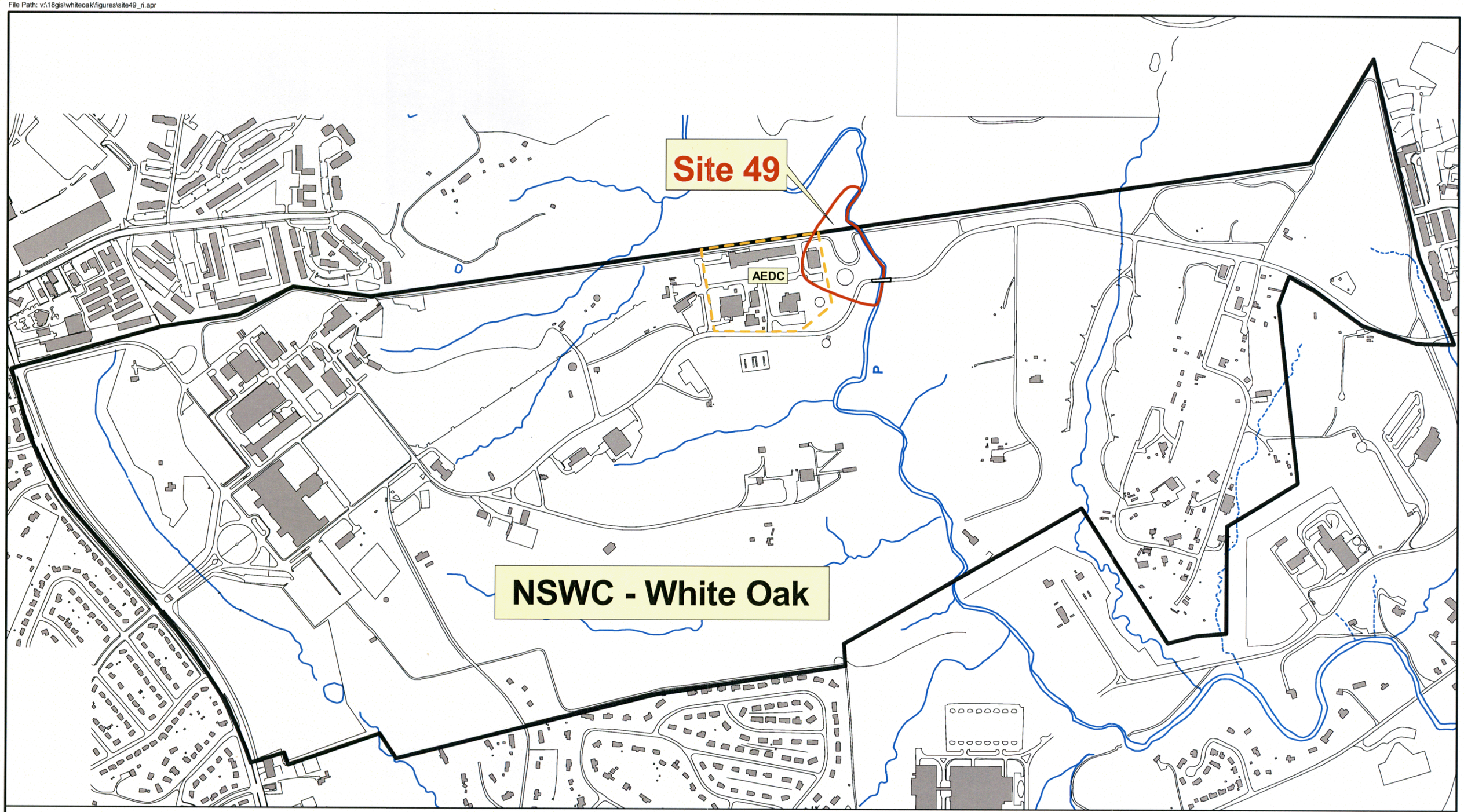

LEGEND

- IR Site Boundary
- AEDC Fence Line
- Base Boundary
- Buildings
- Roads
- Water Bodies

N

700 0 700 1400 Feet

Figure 1-2
Site Location Map
Site 49 RI Report
NSWC - White Oak
Silver Spring, Maryland

CH2MHILL

File Path: v:\18gis\whiteoak\figures\site49_ri.apr

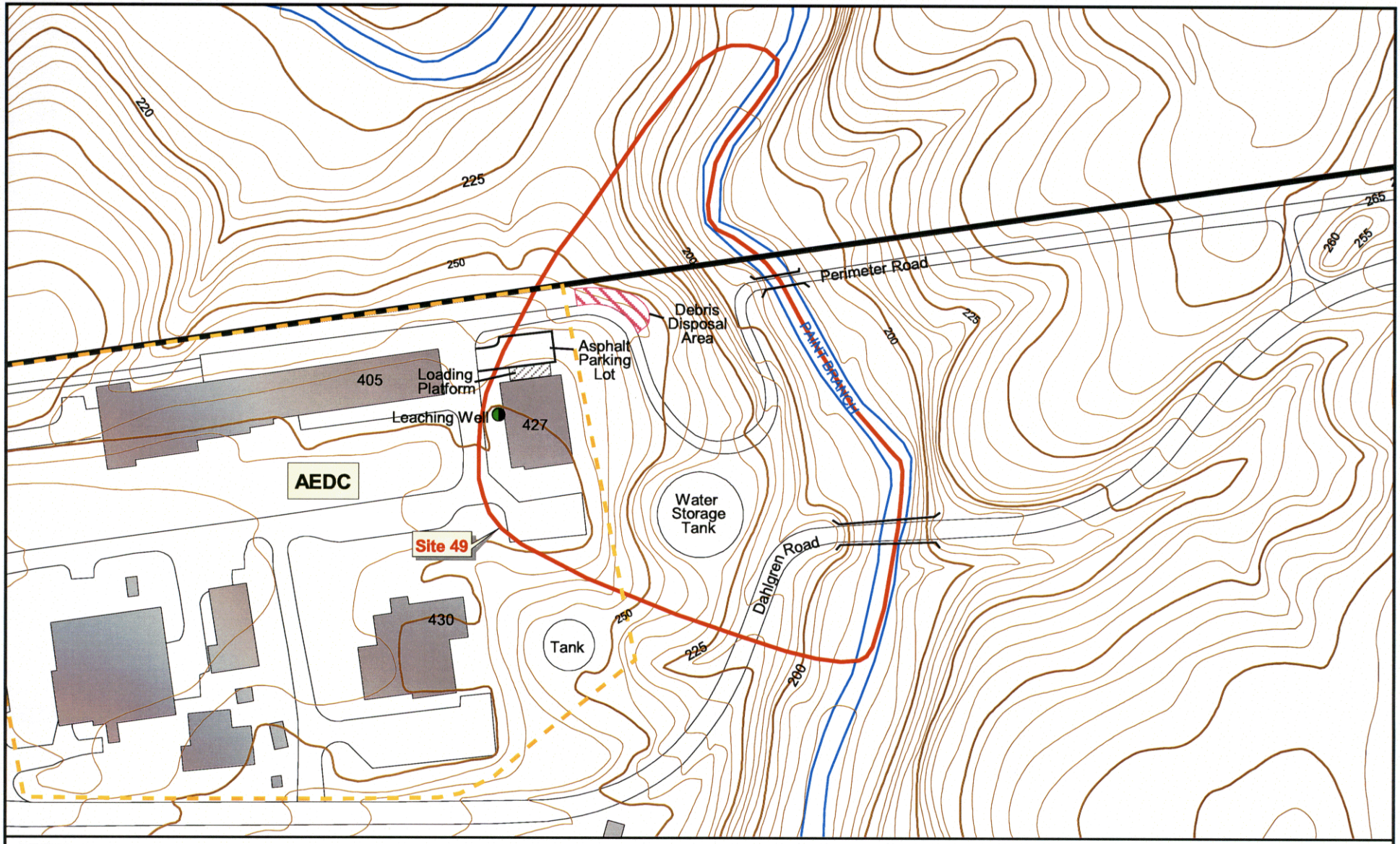

LEGEND

- Buildings (427=Building Number)
- Area Included in Site 49 RI
- AEDC Fence Line
- Stream
- Base Boundary
- Topographic Contour Lines '250' (feet above mean sea level, 5 foot intervals)

N

0 200 400 Feet

Figure 1-3
Site 49 Site Map
Site 49 RI Report
NSWC - White Oak
Silver Spring, Maryland

CH2MHILL

File Path: v:\18gis\whiteoak\figures\site49_ri.apr

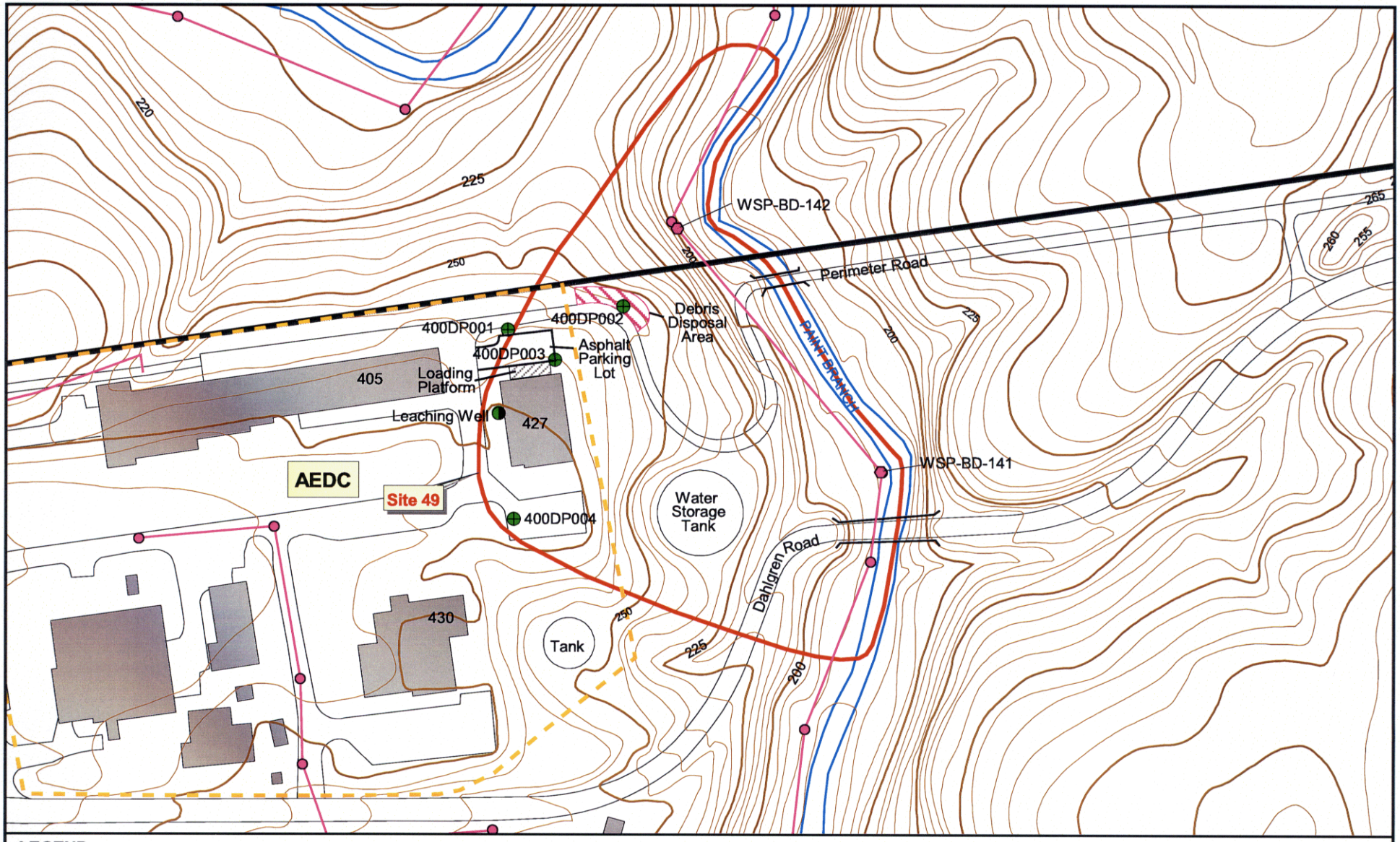

LEGEND

- Buildings (427=Building Number)
- Area Included in Site 49 RI
- AEDC Fence Line
- Stream
- Base Boundary
- Temporary Well Sample Location
- Sewer Bedding/Groundwater Sample Location
- Sewer Manhole
- Sewer Alignment
- Topographic Contour Lines
- '250' (feet above mean sea level, 5 foot intervals)

N

0 200 400 Feet

Figure 1-4
Pre RI Sample Locations
Site 49 RI Report
NSWC - White Oak
Silver Spring, Maryland

CH2MHILL

SECTION 2

Remedial Investigation Activities

This chapter presents a summary of investigation and related activities conducted for the Site 49 RI. The investigation activities comprised sampling soil, groundwater, and surface water to characterize the sources, nature, and extent of contamination, both horizontally and vertically. Related activities included a visual inspection of Building 427 at Site 49 and its former leaching well.

All field activities were conducted in accordance with Standard Operating Procedures (SOPs) outlined in the *Master Project Plans* (MPPs; Brown and Root, 1998) and *Project Plans, RCRA Facility Investigation of Site 49* (PPs; CH2M HILL, 2002). Sampling locations are presented in Figure 2-1. Packer test intervals for groundwater sampling at selected locations for vertical delineation of contamination are presented in Figure 2-2. Analytical parameters for samples are presented in Table 2-1.

2.1 Leaching Well Excavation

The location of the former leaching well, also referred to on architectural drawings as a limestone pit, is shown in Figure 2-1. The leaching well was excavated on June 17, 2002 by Shaw E&I, Inc. (Shaw) as a housekeeping measure and a presumptive remedy. A photoionization detector (PID) was used during excavation for air monitoring and to perform a qualitative headspace scan of the excavated soil for ionizable VOCs. Two soil samples were collected for laboratory analyses during excavation. The first sample was collected at 9 feet below ground surface (bgs), equivalent to a location immediately below the base of the former leaching well. The second sample was collected 2 feet below the first. Both samples were collected using Encore® samplers and submitted to the analytical laboratory for VOC analysis.

Following removal of the leaching well, the excavation zone was backfilled and the area was seeded and covered with hay. The leaching well, which appeared to be constructed with an up-ended concrete sewer pipe with a diameter of 4 feet and a height of 5 feet, was disposed of as construction debris. Photographs taken during the excavation are presented in Appendix A.

2.2 Building 427 Visual Inspection

Building 427 is a seven-story hydrostatic testing facility that includes a large, deep interior water tank. This tank is fed by the exterior aboveground storage tank located immediately southeast of Building 427 (Figure 2-1). Much of Building 427 is below ground. Building 427 was used by the Navy up until the mid 1990s. The tank and building were used for hydrostatic testing of underwater weapons. Discussions with personnel who worked in or had knowledge of the activities that took place in Building 427 indicated that there was no

known use of TCE in the building. Building 427 has not been used by the Air Force AEDC for any of their activities. The building has since been abandoned and is inactive.

On January 2, 2002, CH2M HILL and EFACHES conducted an interview with personnel who had previously worked in Building 427 when it was active, and current staff at AEDC that have knowledge of historical activities conducted in nearby buildings operated by AEDC (such as Building 405) that may have impacted the area. The AEDC staff interviewed included Mr. Bob Voisinet and Mr. Jeff Waldo. Former Navy employees interviewed were Mr. Howie Steves (former supervisor of Building 427 activities) and Mr. Doug Newell (former Building 427 worker).

None of the people interviewed could recall any activities within Building 427 or the east end of Building 405 that would involve parts cleaning/degreasing where TCE might have been used, except that small bottles of TCE were sometimes used for cleaning typewriters. The interviewees noted that the "limestone pit" or leaching well shown on the construction drawings was never used for its designed purpose (disposing of acidic waste water from the water treatment system used to pre-treat water before filling the 7-story testing tank. The wastewater lines leading to the leaching well were reportedly connected to sinks in rooms that were initially designed to be laboratories but were in actuality used as offices.

It was noted that torpedoes were sometimes cleaned on the loading dock area on the north side of Building 427. It was also noted that a small area outside the back (east) gate along the perimeter road was used for debris disposal and may conceivably been used for unauthorized dumping of wastes because it is relatively remote and hidden from view. This area is designated as the Debris Disposal Area on Figure 2-1.

On October 8, 2002, CH2M HILL visually inspected the interior of Building 427 for the presence of potential source materials, processes, or physical features that may have served as sources of or pathways for groundwater contamination. CH2M HILL was accompanied by Robert Voisenet of AEDC. The inspection consisted of walking through all sections of the building, noting and photographing conditions observed. Water samples were collected from two sumps identified in the building. During the Building 427 inspection, a 5-gallon drum labeled "Dry cleaning fluid" was observed in one of the storage rooms in the abandoned building.

Water sample 49SMPL was collected from a sump located in the subbasement (i.e., the lowest elevation point in the building). Water sample 49SMPU was collected from a process sump identified on the 100-level of the building. These samples were submitted for VOC analysis. Photographs taken during the inspection are presented in Appendix B. Selected architectural drawings of Building 427 provided by the Navy are presented in Appendix C.

2.3 Building 427 Sump Perimeter Drain/Manhole Sampling

According to architectural drawings of Building 427 (Appendix C), a subsurface foundation drain runs along the perimeter of the building about 17 to 27 feet below the ground surface (see Figures 2-1 and 2-2). The drain consists of a perforated clay pipe sloping to two manholes, one at the northwest corner of the building and one at the southeast corner of the

building. The northwest manhole is a sump that collects and pumps water to the southeast manhole. The southeast manhole also receives water from two interior basement sumps (via a force main). A grab water sample was collected from each of the two perimeter drain manholes, and from each of the two interior building basement sumps that discharge to the perimeter drain system. Each sample was analyzed for VOCs (Table 2-1).

2.4 Soil Sampling

Seven soil samples (excluding the two associated with the Leaching Well as noted in Section 2.1) were collected from an area where debris was reportedly dumped (Debris Disposal Area; Figure 2-1) in accordance with the MPPs and PPs. Three soil borings were installed using hollow-stem auger (HSA) drilling methods, as discussed below. Soil borings were terminated a depths ranging from 8 feet bgs to 14 feet bgs. Three samples were collected from each of borings 49SB202 (6, 10, and 12 ft bgs) and 49SB203 (4, 6, and 10 ft bgs); and only one sample was collected from boring 49SB201 (6 ft bgs) due to poor sample recovery in split spoons. A PID was used to screen each sample prior to submission to the lab. The samples were analyzed for VOCs, semivolatile organic carbons (SVOCs), polycyclic aromatic hydrocarbons (PAHs), pesticides, polychlorinated biphenyls (PCBs), metals, cyanide, total organic carbon (TOC), pH, and explosives (Table 2-1). Three of the samples, however, could not be analyzed for PCBs or pesticides to due low sample volume (i.e., poor recovery). These analyte groups were eliminated as less likely to have been present and because of their large sample volume requirements.

Soil boring logs are presented in Appendix D. These logs contain lithologic descriptions of soil encountered, sample recovery, Standard Penetration Test (SPT) results, and PID screening results.

2.5 *In Situ* Groundwater Sampling

In general, the *in situ* groundwater sampling program comprised three types: (1) DP "grab" water samples collected from the backfill of the WSSC sewer lines, (2) groundwater samples collected from temporary monitoring wells, and (3) DP groundwater samples collected along the shoreline of Paint Branch to assess groundwater quality immediately below Paint Branch. The collection of "grab" water samples is presented in the WSSC sanitary sewer line investigation (CH2M HILL, 2001) and is not repeated here.

Temporary monitoring wells were installed in accordance with MPPs and PPs at nine locations, including the four discussed in Section 1.4 (Figure 2-1) using HSA and percussion drilling methods. In most cases, drilling was terminated at the water table; however, owing to poor water yields (i.e., the water table was not discernable during drilling), drilling continued past the water table in some instances. Temporary monitoring wells consisting of 2-inch inner diameter (ID), Schedule 40, polyvinyl chloride (PVC) screens and risers were installed in the boreholes. Sand and bentonite were installed in manner the same as that for permanent monitoring wells described in Section 2.6. The remainder of the annulus was left open, pending the results of sampling. Samples were collected using dedicated, disposable Teflon® bailers and submitted for VOC analysis (Table 2-1).

Eight groundwater samples were collected along the shore line of Paint Branch using direct-push methods to collect samples of groundwater below Paint Branch. At each location, a 2-inch ID stainless-steel drive point was installed using a sledge hammer. The samples were collected using disposable Teflon® bailers and submitted to the analytical laboratory for VOC analysis (Table 2-1). Between locations, the drive point was decontaminated using a tap water wash, followed by a Liquinox and tap water rinse, followed by a second tap water rinse, and finally by a deionized water rinse.

2.6 Permanent Monitoring Well Installation

Twelve permanent groundwater monitoring wells were installed at various locations within Site 49 (Figure 2-1), using a combination of the HSA and percussion (air hammer) methods. HSA drilling methods were used for installing the shallow soil borings and the unconsolidated portion of monitoring well boreholes. Soil borings were advanced using 4.25-inch ID HSA. Monitoring wells that penetrated bedrock, but did not require a steel outer casing, were installed using 6.25-inch ID HSA to refusal, followed by percussion drilling using a nominal 6-inch air hammer to the final depth. Monitoring wells requiring surface casings were installed in a similar manner, although the 6-inch diameter air hammer was used to reach the total depth of the steel casing rather than the total depth of the well. Upon reaching the desired depth of the casing, a 4-inch-ID steel casing was installed and grouted in place with a 20:1 Portland cement–bentonite grout. The grout was allowed to set overnight. Following casing installation, a nominal 4-inch-diameter air hammer was used to drill the remainder of the borehole. Groundwater samples were collected using packer tests at discrete 10-foot vertical intervals during the borehole advancement for bedrock monitoring wells 49GW201DD and 49GW206D, as discussed in Section 2.7.

Two-foot split-spoon samples were collected every 5 feet during drilling in unconsolidated materials. Rock cuttings during air hammer drilling were also examined for lithologic classification, and a continuous rock core was collected during the installation of monitoring well 49GW201DD, using NX-wireline coring. Boring logs are presented in Appendix D.

Wells were constructed with 2-inch ID, Schedule 40 PVC screens and risers, in accordance with MPPs and PPs. No. 2 filter pack sand was installed from the base of the screen to a point 2 feet above the screen. An annular seal consisting of 2 feet of bentonite chips was installed and hydrated above the filter pack. A 20:1 cement-bentonite grout was used to complete the remainder of the annular space. With the exception of 49GW202S, all monitoring wells were completed with stick-up covers with protective bollards. Monitoring well 49GW202S was completed using a flush-mount cover installed in a 2-foot-square concrete base. Wells were developed following completion, in accordance with MPPs and PPs. Construction details are summarized in Table 2-2; well completion diagrams are provided in Appendix E.

2.7 Packer Testing and Sampling

As noted above, groundwater samples were collected using dual packers during the borehole advancement for bedrock monitoring wells 49GW201DD and 49GW206D. These tests were completed by placing and inflating a straddle packer 10 feet above the bottom of

the open, uncased borehole, followed by purging and collecting groundwater from that discrete interval. This effort provided vertical delineation of groundwater contamination and assisted in the design of surface casings. In well 49GW201DD, the intervals sampled included 48–60, 65–80, and 90–99 feet bgs (Figure 2-2). In well 49GW206D, the intervals sampled included 70–80, 90–100, 110–120, 130–140, 150–160, and 160–190 feet bgs (Figure 2-2). Samples were analyzed on a 12-hour turnaround for VOCs using method OLM04V (standard DL) or OLM03V (low-concentration DL), depending on the anticipated concentrations (Table 2-1).

2.8 Monitoring Well Sampling

Monitoring wells were sampled in accordance with MPPs and PPs to characterize the nature and extent of groundwater contamination at the site and to provide data for the human health risk assessment. Four monitoring well sampling events were conducted in June, August, and October 2002 and February 2003 as a consequence of the phased nature of the monitoring well installation. Selected data from earlier reports are incorporated in this report.

Depth to water and total well depth were recorded for all site wells prior to the commencement of sampling. Sampling was typically performed using a submersible 2-inch diameter pump placed with the pump intake located at the mid-point of the screened interval.[1] The wells were purged and sampled using a low-flow method (i.e., flow rates less than 1 liter per minute). During purging, *in situ* parameters including dissolved oxygen, pH, oxidation-reduction potential, temperature, and conductivity were monitored and recorded. Final field data collected during the purge process are tabulated in Appendix F. Analytical parameters for each of the samples collected are presented in Table 2-1.

Decontamination of equipment, quality assurance, and quality control were carried out as specified in the Sampling and Analysis Plan (CH2M HILL, 2001) and Quality Assurance Project Plan (CH2M HILL, 2001).

2.9 Surface Water Sampling

On August 2, 2002, surface water samples were collected from three locations along Paint Branch, shown on Figure 2-1. A fourth sample was collected at location PBSW213 in October 2002. These samples were collected to determine if the VOCs present in groundwater at Site 49 were detectable in Paint Brach surface water, and to evaluate potential human health risk from exposure to any contaminants that may be present in surface water. Due to low-flow conditions in Paint Branch, "grab" surface water samples were collected directly from the stream into sample bottles. The first three surface water samples were analyzed for the presence of VOCs, SVOCs, TAL Metals, total cyanide, explosives, perchlorate, and hardness (Table 2-1). The fourth sample was analyzed for VOCs only.

[1] Certain wells with particularly poor yield, like 49GW206D, were sampled using dedicated, disposable Teflon bailers because yield and head pressures did not support the use of submersible pumps.

2.10 Surveying

A licensed surveyor measured the ground surface and top-of-casing elevations of all monitoring wells and two surface water benchmarks to the nearest 0.01 foot, relative to the National Geodetic Vertical Datum of 1929 (NGVD-29). Horizontal locations for sampling locations were surveyed using a portable backpack Global Positioning System (GPS). Survey reports are provided in Appendix G.

			Analysis (Methods)																
Date Collected	Station	Sample ID	Low Concentration Volatiles	Volatiles	Low Concentration Semivolatiles	Semivolatiles	PAH	Pesticides/PCBs	Tal Metals + Cyanide	Explosives	Perchlorate	Methane, Ethane, Ethene	Sulfate, Chloride, Nitrate	Nitrogen, Ammonia	TOC	Hardness	Alkalinity	PH	Percent Solids
			OLC03-V	OLM04-V	OLC03-SV	OLM04-SV	SW8270	OLM04-P/A	ILM04	SW8330	E314.0	RSK-175	E300	E350.3	SW9060	E310.2	E310.1	SW9045C	CLP_SOLIDS
	Temporary Wells																		
08/21/2001	400DP001	400DP01-25	X																
11/07/2001	400DP002	400DP002-82	X																
11/07/2001	400DP003	400DP003-53	X																
11/08/2001	400DP004	400DP004-48	X																
06/27/2002	49DP205	049DP20562	X																
06/30/2002	49DP209	049DP20946	X																
06/30/2002	49DP207	049DP20763	X																
07/01/2002	49DP206	049DP20636	X																
07/02/2002	49DP210	049DP21032	X																
	Packer Test																		
11/20/2002	49TW201DD	049PT201DD4860	X																
11/21/2002	49TW201DD	049PT201DD6780	X																
11/24/2002	49TW201DD	049PT201DD8099	X																
12/03/2002	49TW206D	049PT206D7080	X																
12/05/2002	49TW206D	049PT206D9099	X																
12/06/2002	49TW206D	049PT206D110120	X																
12/09/2002	49TW206D	049PT206D130140	X																
12/12/2002	49TW206D	049PT206D150160	X																
12/17/2002	49TW206D	049PT206D150199 *	X																
	Permanent Wells																		
08/02/2002	49GW200	049GW2000001	X		X				X	X	X	X	X	X			X		
10/10/2002	49GW200	049GW2000002	X																
08/02/2002	49GW201S	049GW201S001	X		X				X	X	X	X	X	X			X		
10/10/2002	49GW201S	049GW201S002	X																
10/10/2002	49GW201S	049GW201S9902 *	X																
08/02/2002	49GW201D	049GW201D001	X		X				X	X	X	X	X	X			X		
10/10/2002	49GW201D	049GW201D002	X																
02/10/2003	49GW201DD	049GW201DD001	X						X				X	X			X		
08/01/2002	049GW202S	049GW2020001	X		X				X	X	X	X	X	X			X		
08/01/2002	049GW202S	049GW2029901 *	X		X				X	X	X	X	X	X			X		
10/09/2002	049GW202S	049GW2020002	X																
02/11/2003	49GW202D	049GW202D001	X						X				X	X			X		
08/02/2002	49GW203	049GW2030001	X		X				X	X	X	X	X	X			X		
10/09/2002	49GW203	049GW2030002	X																
08/01/2002	49GW204	049GW2040001	X		X				X	X	X	X	X	X			X		
10/09/2002	49GW204	049GW2040002	X																
02/12/2003	049GW206M	049GW206M001	X						X				X	X			X		
02/11/2003	049GW206S	049GW206S0001	X						X				X	X			X		
02/13/2003	049GW206D	049GW206D001	X						X				X	X			X		
02/12/2003	049GW206D	049GW206D9901 *	X						X				X	X			X		
	Soil Samples																		
06/17/2002	49SB200	049SU2000901		X															X
06/17/2002	49SB200	049SU2001101		X															X
07/09/2002	49SB201	049SU2010601		X		X	X	X	X	X					X			X	X
07/10/2002	49SB202	049SU2020601		X		X	X	X	X	X					X			X	X
07/10/2002	49SB202	049SU2021001		X		X	X	X	X	X					X			X	X
07/10/2002	49SB202	049SU2021201		X		X	X	X	X	X					X			X	X
07/09/2002	49SB203	049SU2030401		X		X	X	X	X	X					X			X	X
07/09/2002	49SB203	049SU2030601		X		X	X	X	X	X					X			X	X
07/09/2002	49SB203	049SU2031001		X		X	X	X	X	X					X			X	X
	Sumps and Manholes																		
10/08/2002	49MHSWSE	049MHSWSE29	X																
10/08/2002	49MHSWNW	049MHSWNW11	X																
10/08/2002	49SMPL	049SMPL1002	X																
10/08/2002	49SMPU	049SMPU1002	X																
Direct Push Groundwater Samples from Stream Bed																			
11/20/2002	49DP301	049DP30102	X																
11/20/2002	49DP302	049DP30203	X																
11/20/2002	49DP303	049DP30302	X																
11/20/2002	49DP304	049DP30402	X																
11/22/2002	49DP305	049DP30503	X																
11/22/2002	49DP306	049DP30602	X																
11/22/2002	49DP307	049DP30702	X																
11/22/2002	49DP308	049DP30802	X																
	Surface Water Samples																		
08/02/2002	PBSW210	PBSW2100001		X		X			X	X	X					X			
08/02/2002	PBSW211	PBSW2110001		X		X			X	X	X					X			
08/02/2002	PBSW211	PBSW2119901 *		X		X			X	X	X					X			
08/02/2002	PBSW212	PBSW2120001		X		X			X	X	X					X			
10/09/2002	PBSW213	PBSW2130001	X																

* Duplicate Sample

00515A02Z

File Path: v:\18gis\whiteoak\figures\site49_ri.apr

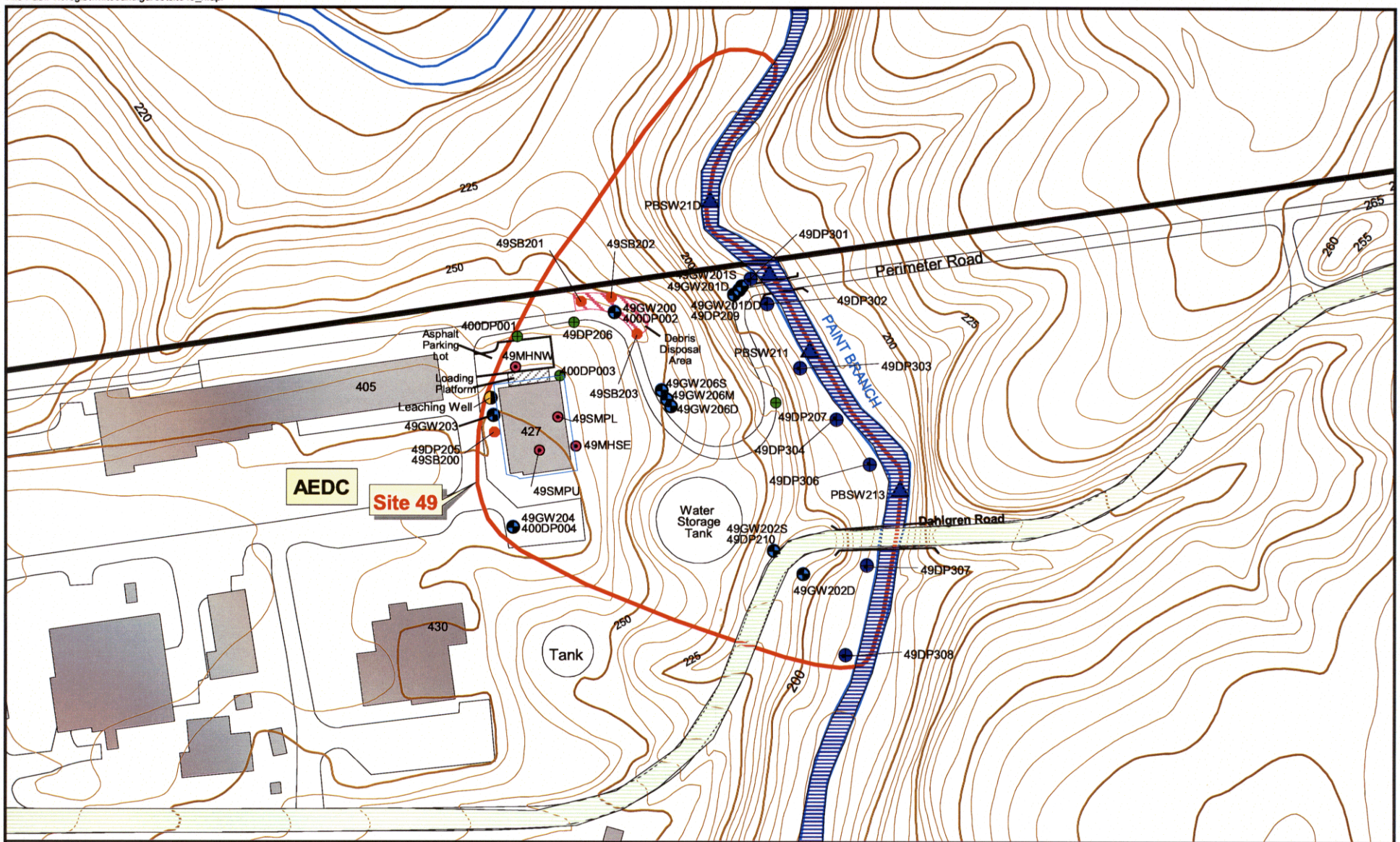

LEGEND

- Buildings (427=Building Number)
- Area Included in Site 49 RI
- AEDC Fence Line
- Stream
- Base Boundary
- Monitoring Well Location
- Temporary Well Sample Location
- Leaching Well Location
- Surface Water Sample Location
- Manhole/Sump Location
- Soil Borring
- Direct Push Groundwater Sample
- Building 427 perimeter dreain
- Topographic Contour Lines '250' (feet above mean sea level, 5 foot intervals)

N

0 200 400 Feet

Figure 2-1
Sampling Locations
Site 49 RI Report
NSWC - White Oak
Silver Spring, Maryland

CH2MHILL

9208f030.dgn 07-MAY-2004

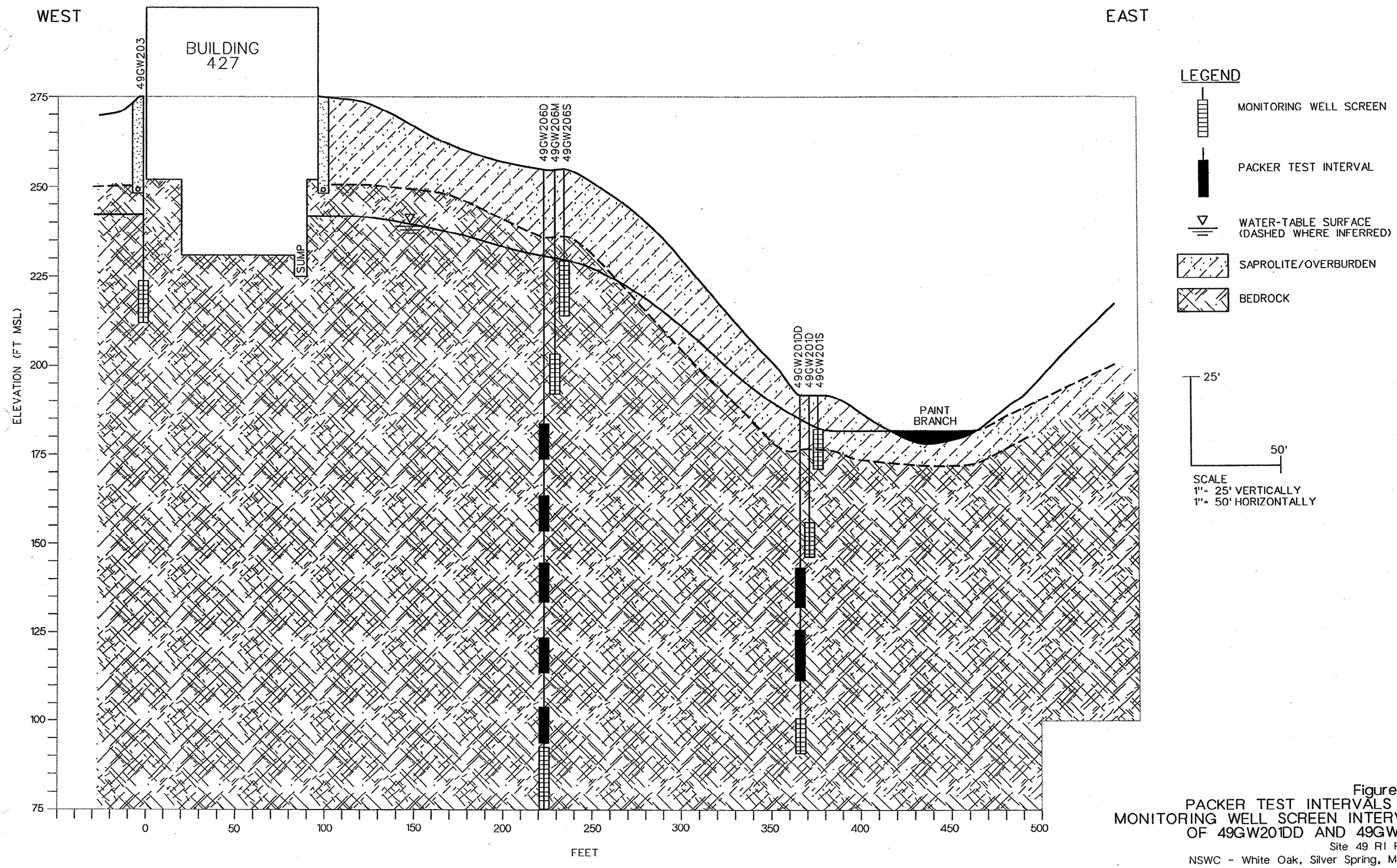

Figure 2-2
PACKER TEST INTERVALS AND MONITORING WELL SCREEN INTERVALS OF 49GW201DD AND 49GW206D
Site 49 RI Report
NSWC - White Oak, Silver Spring, Maryland

CH2MHILL

00515A04Z

SECTION 3

Physical Characteristics of Site 49

Chapter 3 describes the physical characteristics of NSWC–White Oak and Site 49. Section 3.1 describes physiography, topography, and climate; Section 3.2 describes surface water hydrology; and Section 3.3 describes soil and sediment. The geology and hydrogeology, both regional and site-specific, are discussed in Section 3.4 and Section 3.5, respectively. Section 3.6 presents a conceptual model of groundwater flow that discusses groundwater-surface water interactions involving Paint Branch and the various lines of hydrogeologic evidence demonstrating that groundwater at Site 49 discharges to this bounding stream.

3.1 Physiography, Topography, and Climate

NSWC–White Oak, located 4 miles northeast of Washington, DC, is situated along the Fall Line, which marks the surficial expression of the contact between the Piedmont and Atlantic Coastal Plain physiographic provinces. The terrain in the vicinity of Site 49 consists of locally steep hills, particularly in areas dissected by stream channels. The drainage pattern at Site 49 is dominated by Paint Branch. Land cover at Site 49 varies between woodland, grassland, paved areas, and buildings.

Elevations at Site 49 range from approximately 275 feet above mean sea level (msl) around Building 427 to approximately 180 feet above msl, at Paint Branch (Figure 3-1).

Average monthly wind speeds vary from 8 miles per hour (mph) in August to 11 mph in March. The prevailing wind is mainly from the south, with winter northwesterlies in December, January, and February (Brown & Root, 1998).

Average annual precipitation is about 42 inches with little seasonal variation, based on data available from 1961 through 1990. Fluctuation is gradual, with a minimum of 2.6 inches in February and a maximum of 4.3 inches in May. Massive snowfall is not common, but occasionally occurs. Greatest snowfalls are usually seen in January and February (Brown & Root, 1998).

3.2 Hydrology

The only surface water body in the vicinity of Site 49 is Paint Branch, which forms its eastern boundary. Paint Branch flows generally southeast from headwaters north of NSWC–White Oak to its discharge into the upper reaches of the Anacostia River approximately 5 miles downstream of NSWC–White Oak, draining an area of 17.5 square miles. In the immediate vicinity of Site 49, Paint Branch flows south. The Paint Branch channel likely is fracture-controlled and its channel is incised into bedrock throughout much of its channel in the vicinity of NSWC-White Oak.

3.3 Soil

Soil consists of weathered rock and organic material that has been broken down organically by physical processes, bacteria, and other small biota (e.g., plants, fungi, and small animals). The two main classes of soils on and near the facility are:

- The Glenelg-Manor-Chester (GMC) association, which was developed from materials weathered from the Piedmont metamorphic rocks. It is present in the stream valleys of West Farm Branch, Paint Branch, and smaller streams present on the facility. These soils are silty, micaceous, and more homogeneous than the local Atlantic Coastal Plain soils (USDA, 1961).
- The Chillum-Beltsville-Croom (CBC) association, which was developed from the Atlantic Coastal Plain deposits. Found across the site, these soils often contain varying amounts of gravel, sand, silt, and clay. A sub-cemented subsoil layer of considerably lower permeability than the surface, known as a fragipan, commonly exists a few feet below the surface. The soil horizons in this association have a greater range in permeability due to the larger variability in grain size distribution (USDA, 1961).

Specific soil types at Site 49 include the Manor silty-loam (MdB2 and MdE2; USDA, 1961), located in the topographically upgradient portion of the site and the hill slopes down to the Paint Branch channel. The Manor silty loam soils generally are derived from parent bedrock materials, moderately to excessively-drained, strongly- to very strongly-acid, with weakly developed subsoil profiles. These soils are present only as a thin veneer at Site 49. Soil in the Paint Branch channel at Site 49 is of the Chewacla silt loam type (CkA: USDA, 1961), which is moderately well-drained, relatively fine-grained, and strongly- to very strongly acid. This soil type is derived principally from other soil types and transported by erosive processes. Soils in wooded areas may have a pH as low as 4 due to the relatively higher source of organic plant material. Grassland areas are expected to be slightly less acidic and have a pH closer to 6 (USDA, 1961).

3.4 Geology

The geologic characteristics of Site 49 and the surrounding region are discussed in this section. This discussion focuses on the geologic units encountered at the site and their hydrogeologic features. Table 3-1 summarizes the geological material encountered at the site in the context of various characterization systems (i.e., physiographic, chronostratigraphic, lithostratigraphic, and hydrostratigraphic units).[2]

[2] Chronostratigraphic units are generally formal, named geologic units based on temporal associations, as described in scientific literature; Lithostratigraphic units are informally named, generally site-specific geologic units that are organized on the basis of lithology (i.e., geologic materials having similar physical characteristics). These units may be the same as, subdivisions of, or different from chronostratigraphic units; Hydrostratigraphic units are informally named geologic units, generally site-specific, that are organized on the basis of hydrogeologic similarities and connections (i.e., geologic materials through which groundwater moves in a consistent manner). These units may be the same as, subdivisions of, or different from chronostratigraphic or lithostratigraphic units.

3.4.1 Regional Geology

The regional geology is discussed in detail in the *Master Project Plans for the former NSWC–White Oak* (Brown and Root Environmental, 1998). In summary, the facility is located about 1 mile east of the boundary between the Piedmont and Atlantic Coastal Plain physiographic provinces, also known as the Fall Line. This boundary runs southwest to northeast and is generally parallel to the Montgomery – Prince George's County line in the White Oak area (shown in Figure 1-1). Geologically, the Fall Line represents the unconformable contact where older Precambrian to Cambrian[3] Piedmont bedrock, exposed to the northwest, dips beneath the unconsolidated, Cretaceous-age Potomac Group deposits, which increase in thickness to the southeast, and recent surficial deposits.

The Atlantic Coastal Plain in the region comprises unconsolidated fluvial sediments of the Potomac Group (Cloos, 1964). These sediments consist of micaceous quartz, quartz sandstone, and quartzite grains ranging in size from sands to cobbles, in close association with clays and silts. The gravels at the base of the formation may be cemented with iron oxide (Volkes and Edwards, 1974). These sediments form a wedge that pinches out at the Fall Line and thickens in a southeasterly direction. Underlying the Atlantic Coastal Plain sediments is the crystalline Piedmont bedrock.

The Piedmont bedrock in this region is generally characterized by sequences of metamorphic rocks such as gneiss and schist of Precambrian to Cambrian age. The upper portion of the bedrock has weathered to a saprolite, which has been removed in many stream valleys (including that of Paint Branch) by erosion.

Cloos (1964) reports fractures and foliation in the Piedmont rocks. Specifically, Froelich (1975) reported foliations with a northeast-southwest strike, dipping southeast and joints with a north-south or northeast-southwest strike and a vertical orientation at outcrops in Paint Branch.

3.4.2 Site 49 Geology

There are two primary lithostratigraphic units underlying Site 49: Piedmont bedrock and derived saprolite. Potomac Group deposits and recent sediments are not present at Site 49. Figure 3-2 shows the location of a geologic cross-section (Figure 3-3) generated from Site 49-specific information to illustrate schematically the geology of the site.

3.4.2.1 Saprolite

The term saprolite describes a rock that has been subjected to *in situ* chemical weathering, resulting in the breakdown of the parent material by dissolution of the more labile constituent minerals, often preserving the structural elements of the parent rock. In the context of this report, the term saprolite also is used as the name of the layer of generally unconsolidated materials immediately above the bedrock. At Site 49, the saprolite is composed of the same materials as the underlying schist bedrock (i.e., no diagenetic or metasomatic alteration during weathering). The saprolite is strongly foliated, preserving the structures of the parent schist. Its thickness ranges from about 5 feet in the north and west to about 25 feet to the south and east. Although the upper part of the saprolite is heavily

[3] More recent research indicates that the Wissahickon may be late-Cambrian to early-Ordovician in age (MGS, 2003).

weathered, soft, and friable, lower portions are less weathered, more consolidated, and harder to penetrate (split-spoon samplers could not penetrate to depths greater than auger refusal). The boundary between saprolite and bedrock is gradational.

3.4.2.2 Bedrock

Underlying the saprolite is a crystalline bedrock likely belonging to the Wissahickon Formation of the Glenarm Series (Volkes and Edwards, 1974; Froelich, 1975). The Wissahickon is a metasedimentary rock of late Precambrian to Cambrian age.

The top of bedrock appears generally to conform to topography. A continuous rock core was collected during the installation of bedrock monitoring well 49GW201DD. In the remaining ten (of eleven) wells advanced into bedrock, cuttings were observed as they were brought to the surface during drilling. Garnet-bearing schist was the primary rock encountered in the collected core; however, quartzite or psammitic granulite was observed near the surface. These components are consistent with descriptions of the Wissahickon in published literature. Fractures were numerous in the shallower portion of the core and decreased with depth. Many of the fractures contained iron and manganese staining, likely present due to fluid flow, with some exhibiting evidence of secondary mineralization. One outcrop of the Wissahickon is exposed along the side of Dahlgren Road southeast of Site 49.

3.5 Hydrogeology

3.5.1 Regional Hydrogeology

As mentioned earlier, NSWC–White Oak is located near the Fall Line. The primary hydrostratigraphic units in the region are the unconsolidated Potomac Groups deposits and the Wissahickon bedrock. Recent surficial deposits generally are not large enough to provide a significant reservoir of groundwater. In the region around NSWC–White Oak, the Potomac Group deposits constitute a relatively shallow, unconsolidated aquifer, containing varying sequences of clays, silts, sands, and gravels, from which the few groundwater supply wells in the area extract water. The Potomac Group aquifers become significant hydrostratigraphic units well outside the NSWC-White Oak region, to the east.

The saprolite present at the gradational contact between overburden and the Wissahickon bedrock does contain significant amounts of water under unconfined conditions. Saprolite often exhibits secondary porosity induced by relict structures. Groundwater flow in the saprolite often is affected by these relict structures as well as by interstitial pore spaces.

The Wissahickon bedrock, however, primarily contains water in fractures within the rock. However, these fractures generally are not productive sources of water in the NSWC–White Oak region. As public water supplies are available from WSSC and the bedrock aquifer does not yield significant amounts of water, few water supply wells are known to exist in the NSWC-White Oak region.

3.5.2 Site 49 Hydrogeology

There are two primary hydrostratigraphic units at the Site 49 area within NWSC–White Oak (Table 3-1), the saprolite and the bedrock. Monitoring wells at Site 49 are screened in these units. The Potomac Group and Recent surficial deposits, present only as a thin veneer, are

unsaturated and are not therefore transmissive enough to exert a significant influence on Site 49 hydrogeology.

The water table occurs in the bedrock in the western portions of Site 49 and in the saprolite in the eastern portions. Groundwater flows from west to east and discharges to Paint Branch (Figure 3-4). The hydraulic gradient of the water table, represented graphically on the cross section in Figure 3-3, varies, depending upon location and generally follows the topographic gradient.

No hydraulic testing of Site 49 was included in the scope of this RI. However, Site 49 is similar to, and in close proximity to, Operable Unit 1 (OU-1), located to the east across Paint Branch, at NSWC–White Oak. Because of their proximity, it is assumed that the hydraulic conductivity of the saprolite and rock at Site 49 is similar to that found in these same units at OU-1. The hydraulic conductivity of the saprolite unit was estimated to be in the range of 6.9×10^{-6} and 1.0×10^{-4} feet per minute (ft/min). The hydraulic conductivity of the bedrock units was estimated to be in the range of 2.3×10^{-6} and 2.8×10^{-6} ft/min. The basis for these values is provided in the *Final Remedial Investigation of Operable Unit 1, NSWC–White Oak* (CH2M HILL, 2002)

At Site 49, groundwater has a downward component of flow, based on the water levels in monitoring wells 49GW206S, M, and D. The water elevation measured in the deep well is approximately 150 feet lower than that measured in the shallow well. This indicates a strong downward gradient and that water bearing fractures sampled during the packer testing program have been dewatered and are recovering at extremely slow rates. Further east (downgradient), vertical gradients in the monitoring well cluster 49GW201, between the shallow, intermediate, and deep wells, are lower than those in the 49GW206 cluster. The gradient from the intermediate monitoring well to the shallow monitoring well is upward, and from the intermediate to the deep well is downward, indicating a potential divergence of flow. In the 49GW202 monitoring well cluster, located hydraulically cross-gradient, the vertical gradient is downward.

3.6 Conceptual Model of Groundwater Flow and Groundwater-Surface Water Interactions

Groundwater at Site 49 originates as recharge during and following precipitation events. Precipitation at the Site frequently exceeds the infiltration rate, producing overland flow and directed stormwater discharge to Paint Branch. Some portion of the precipitation infiltrates into the saprolite and moves in a primarily vertical direction until it reaches the water table to become part of the groundwater flow system. Groundwater originating in the area surrounding Building 427 travels east-northeast towards and discharges to Paint Branch, based on the hydraulic gradients that follow the steep topography, as well as the perennial nature of Paint Branch. Saturated flow occurs exclusively in bedrock fractures at higher elevations (in the upgradient-most portions of the plume) and in both the bedrock and saprolite (through interstitial pore spaces) at lower elevations near Paint Branch. Although Paint Branch may not capture all groundwater flow in the vicinity of Site 49, similar gradients on the east side of Paint Branch preclude groundwater flow past Paint Branch. The vertical gradients and Paint Branch stage indicate that all contaminated

groundwater is captured by Paint Branch. The water level elevation in all three of the 49GW201 cluster are greater than the water level in Paint Branch, indicating upward flow to the stream. The separation point for flow lines below which groundwater flow likely refracts to the south appears to occur well below the maximum depth of contamination. These flow patterns are illustrated on Figure 3-5.

Table 3-1
Summary of Geologic Units
Site 49, NSWC White Oak
Silver Spring, Maryland

Physiographic Provinces	Chronostratigraphic Units	Subunits	Age	Lithostratigraphic Units	Lithology	Hydrostratigraphic Units
NA	Recent[1]	NA		Overburden soil	Soil Glenelg-Manor-Chester Chillum-Beltsville-Croom	NS
Atlantic Coastal Plain	Potomac Group[1,2]	Patapsco Fm.[2] Arundel Fm.[2] Patuxent Fm.[2]	Cretaceous	Potomac Group[2]	Unconsolidated fluvial clay, silt, sand, gravel	NS
Piedmont Province	Wissahickon Formation[3] Glen Arm Series		Late-Precambrian to Early-Cambrian[4]	Saprolite Bedrock	Saprolite derived from underlying bedrock Crystalline schist, quartzite	Saprolite Bedrock

Notes:
-Units presented in order encountered with increasing depth from ground surface
-**Chronostratigraphic** units are generally formal, named geologic units based on temporal associations, as described in scientific literature.
-**Lithostratigraphic** units are informally named, generally site-specific geologic units that are organized on the basis of lithology (i.e., geologic materials having similar physical characteristics). These units may be the same as, subdivisions of, or different from chronostratigraphic units.
-**Hydrostratigraphic** units are informally named geologic units, generally site-specific, that are organized on the basis of hydrogeologic similarities and
connections (i.e., geologic materials through which groundwater moves in a consistent manner). These units may be the same as, subdivisions of,
NA-Not applicable
NS-Not significant at Site; may be significant at regional- and larger-scales
1. Unconformable contact with lower unit
2. Undifferentiated at site, not all named members may be present or differentiable
3. The Wissahickon has been differentiated by some authors into several components, with the consensus that "Wissahickon" is an obsolete term (MGS, 2003). In the vicinity of NSWC White Oak, the most likely Wissahickon component is the Lower Pelitic Schist, formerly mapped as the Wissahickon, Eastern Sequence or the Wissahickon-oligoclase facies (MGS, 2003; Southwick and Fisher, 1967). The designation Wissahickon will be used in this report for consistency with earlier reports.
4. More recent research indicates that the Wissahickon may be late-Cambrian to early-Ordovician in age (MGS, 2003).

File Path: v:\18gis\whiteoak\figures\site49_ri.apr

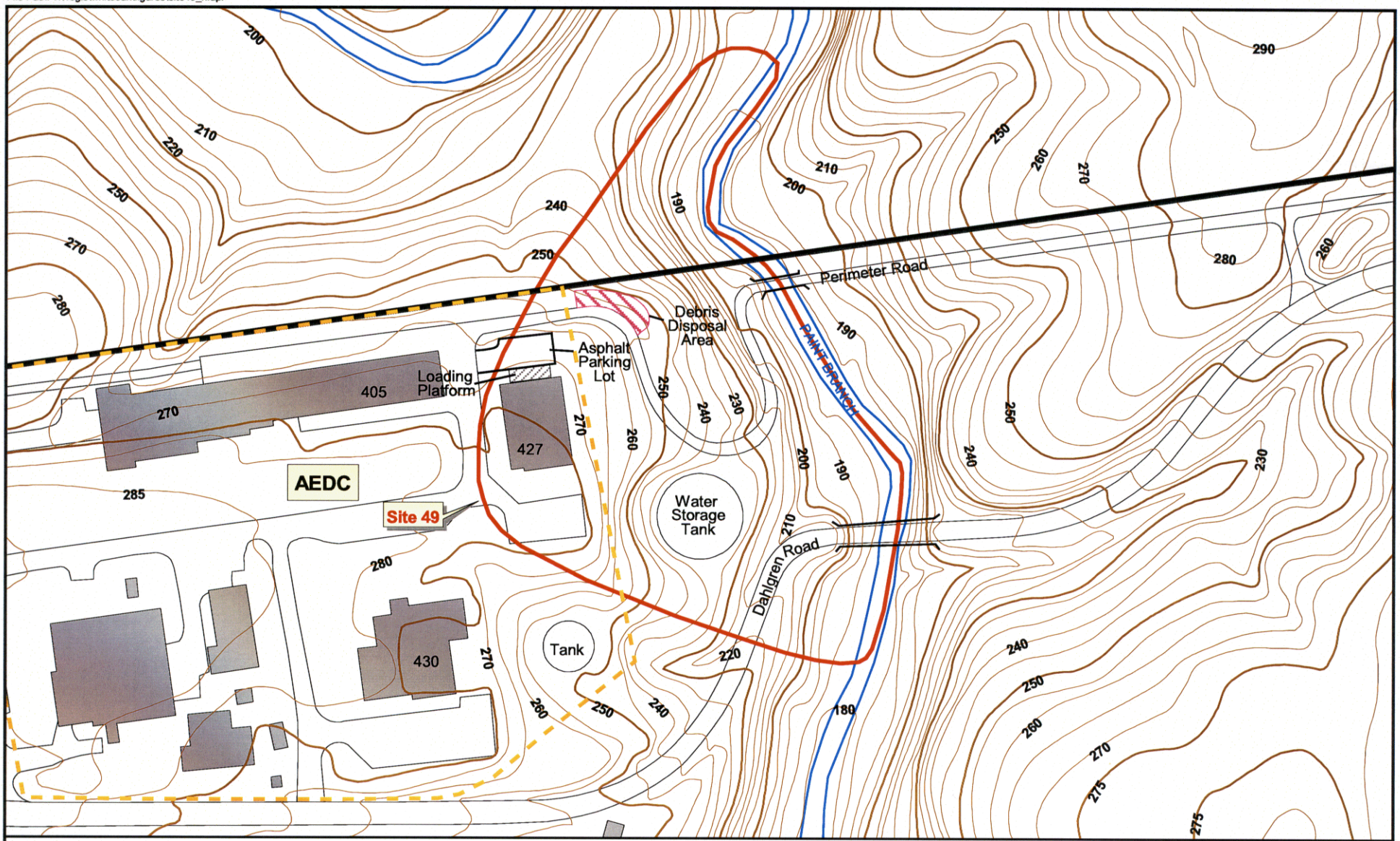

LEGEND

- Buildings (427=Building Number)
- Area Included in Site 49 RI
- AEDC Fence Line
- Stream
- Base Boundary
- Topographic Contour Lines '250' (feet above mean sea level, 5 foot intervals)

N

0 200 400 Feet

Figure 3-1
Site Topography
Site 49 RI Report
NSWC - White Oak
Silver Spring, Maryland

CH2MHILL

File Path: v:\18gis\whiteoak\figures\site49_ri.apr

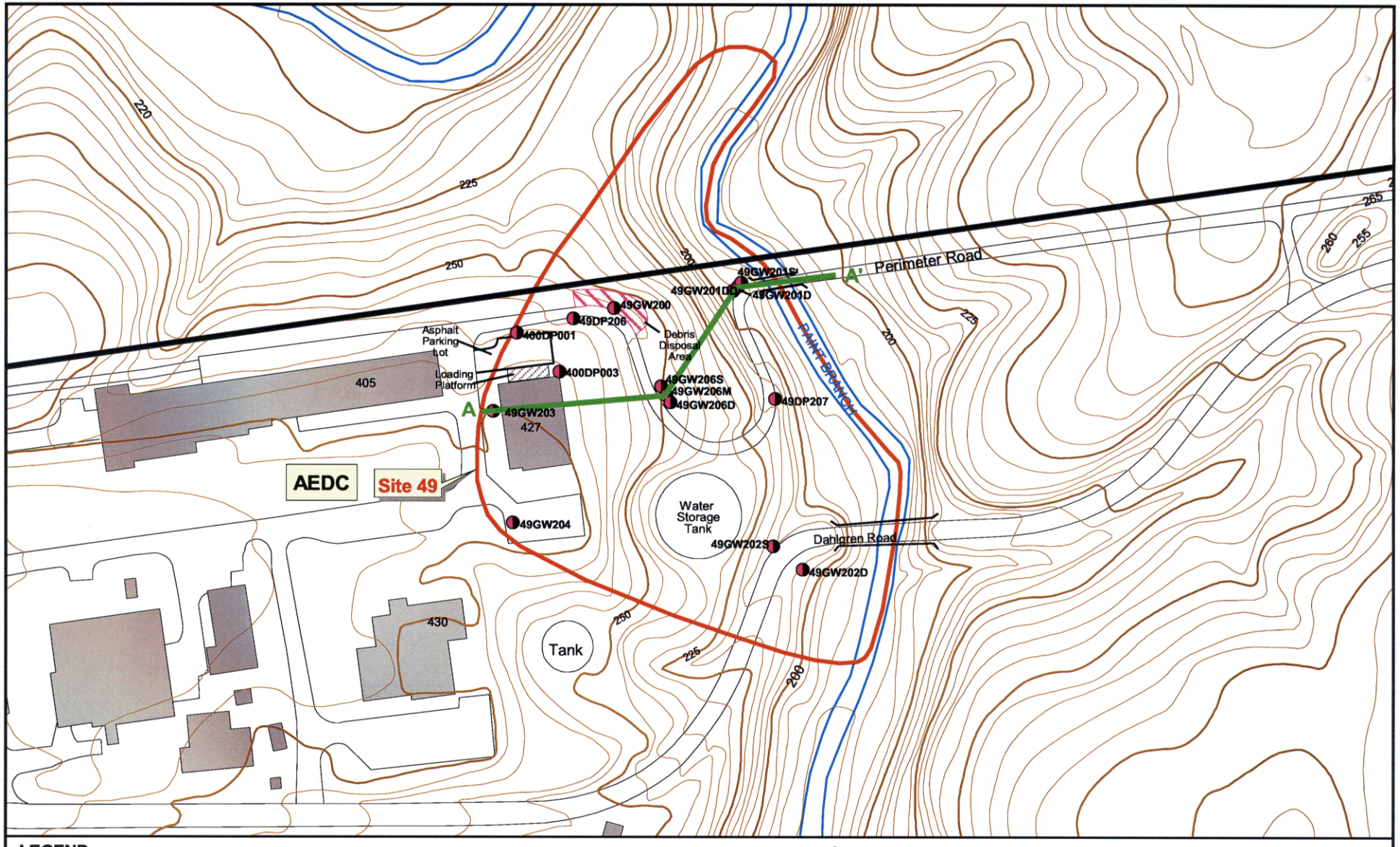

LEGEND

- Buildings (427=Building Number)
- Area Included in Site 49 RI
- AEDC Fence Line
- Stream
- Base Boundary
- Well Locations
- Cross-section Location
- Topographic Contour Lines '250' (feet above mean sea level, 5 foot intervals)

N

0 200 400 Feet

Figure 3-2
Cross-section Location
Site 49 RI Report
NSWC - White Oak
Silver Spring, Maryland

CH2MHILL

9208f032.dgn 10-MAY-2004

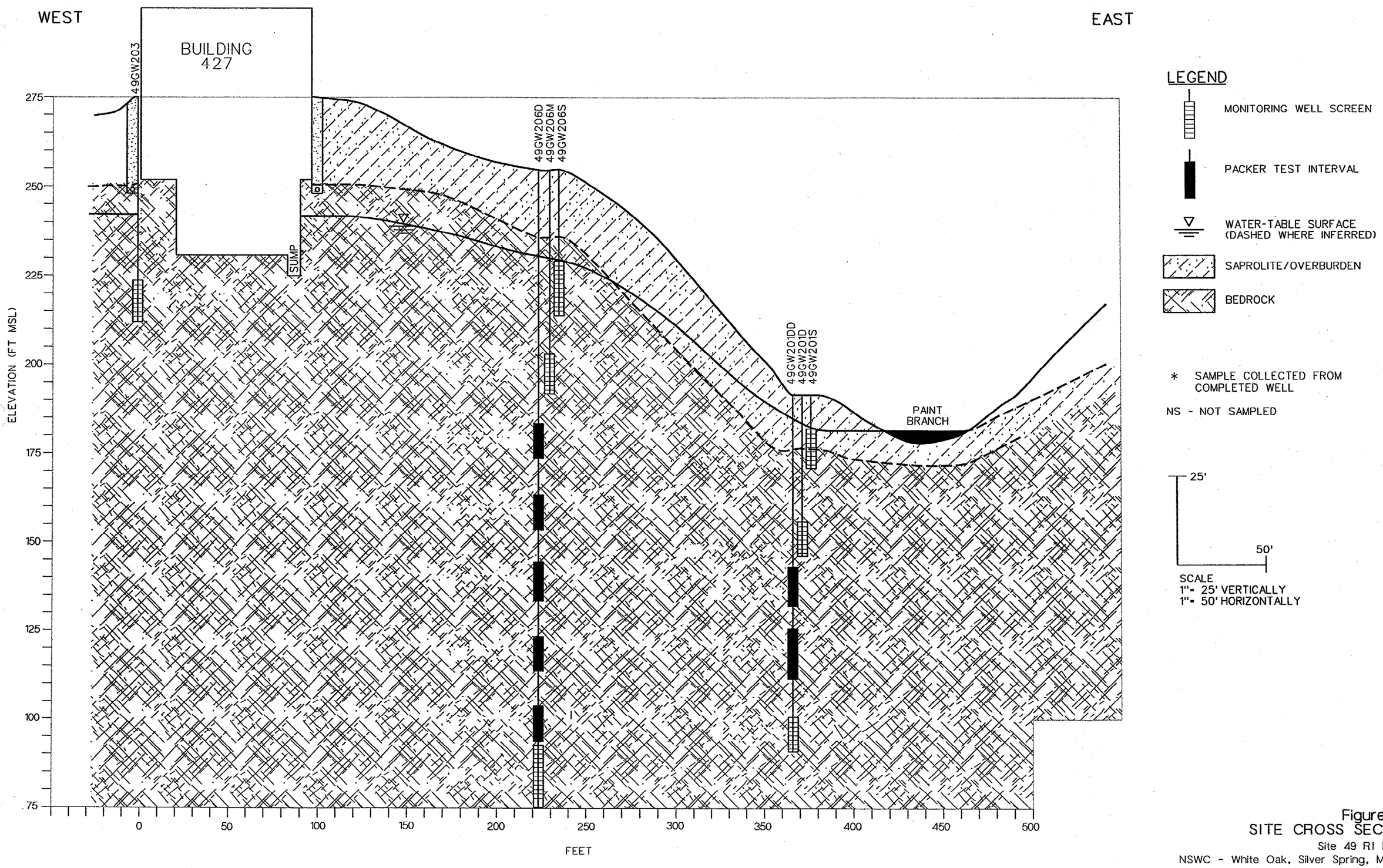

Figure 3-3
SITE CROSS SECTION
Site 49 RI Report
NSWC - White Oak, Silver Spring, Maryland

CH2MHILL

00515A062

File Path: v:\18gis\whiteoak\figures\site49_ri.apr

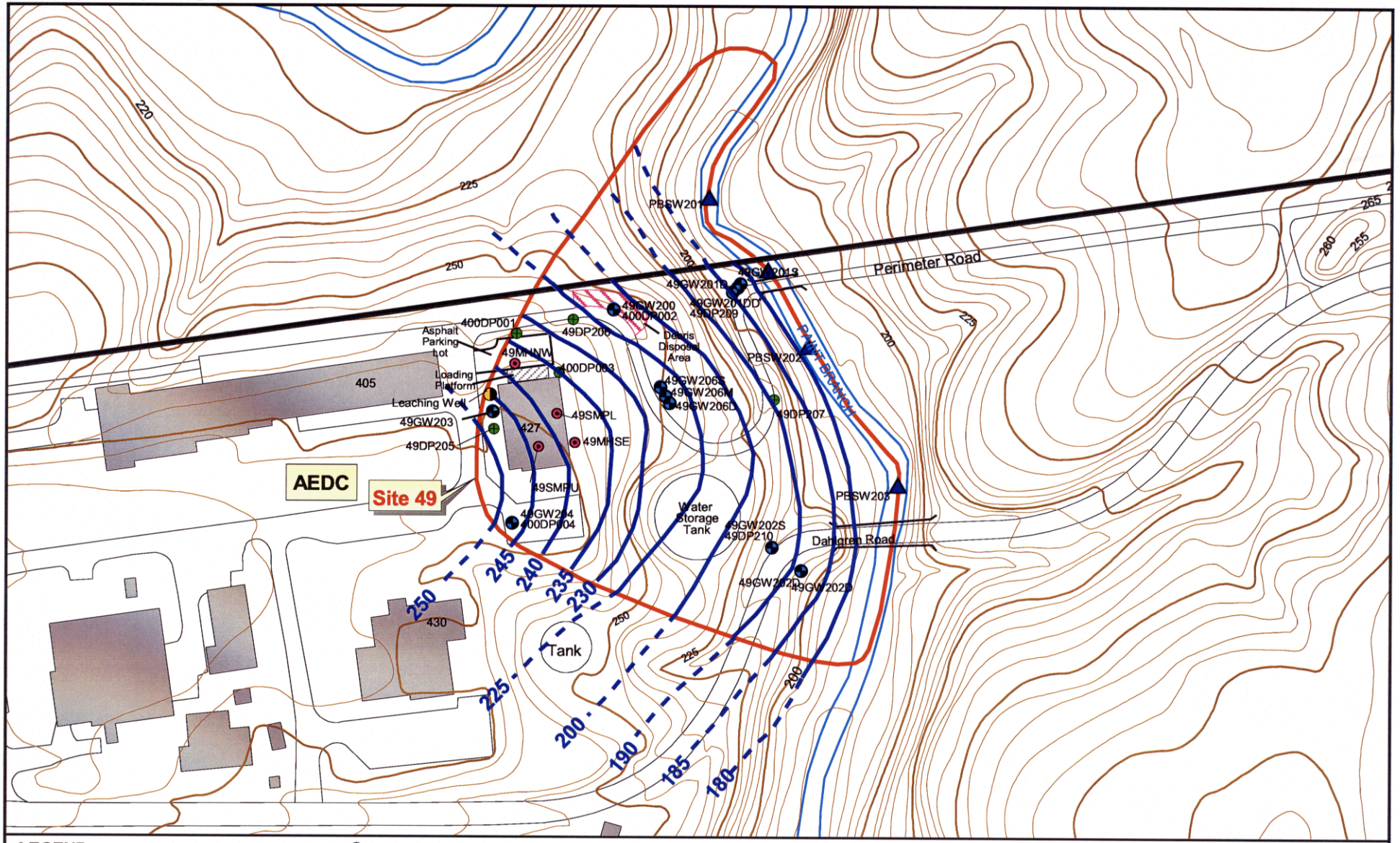

LEGEND

- Buildings (427=Building Number)
- Area Included in Site 49 RI
- Topographic Contour Lines
  '250' (feet above mean sea level, 5 foot intervals)
- Potentiometric Surface in feet above Sea Level (dashed where inferred)
- Monitoring Well Location
- Direct Push Sample Location
- Leaching Well Location
- Surface Water Sample Location
- Manhole/Sump Location

N

0 200 400 Feet

Figure 3-4
Water Table Contours
Site 49 RI Report
NSWC - White Oak
Silver Spring, Maryland

CH2MHILL

File Path: v:\18gis\whiteoak\figures\site49_ri.apr

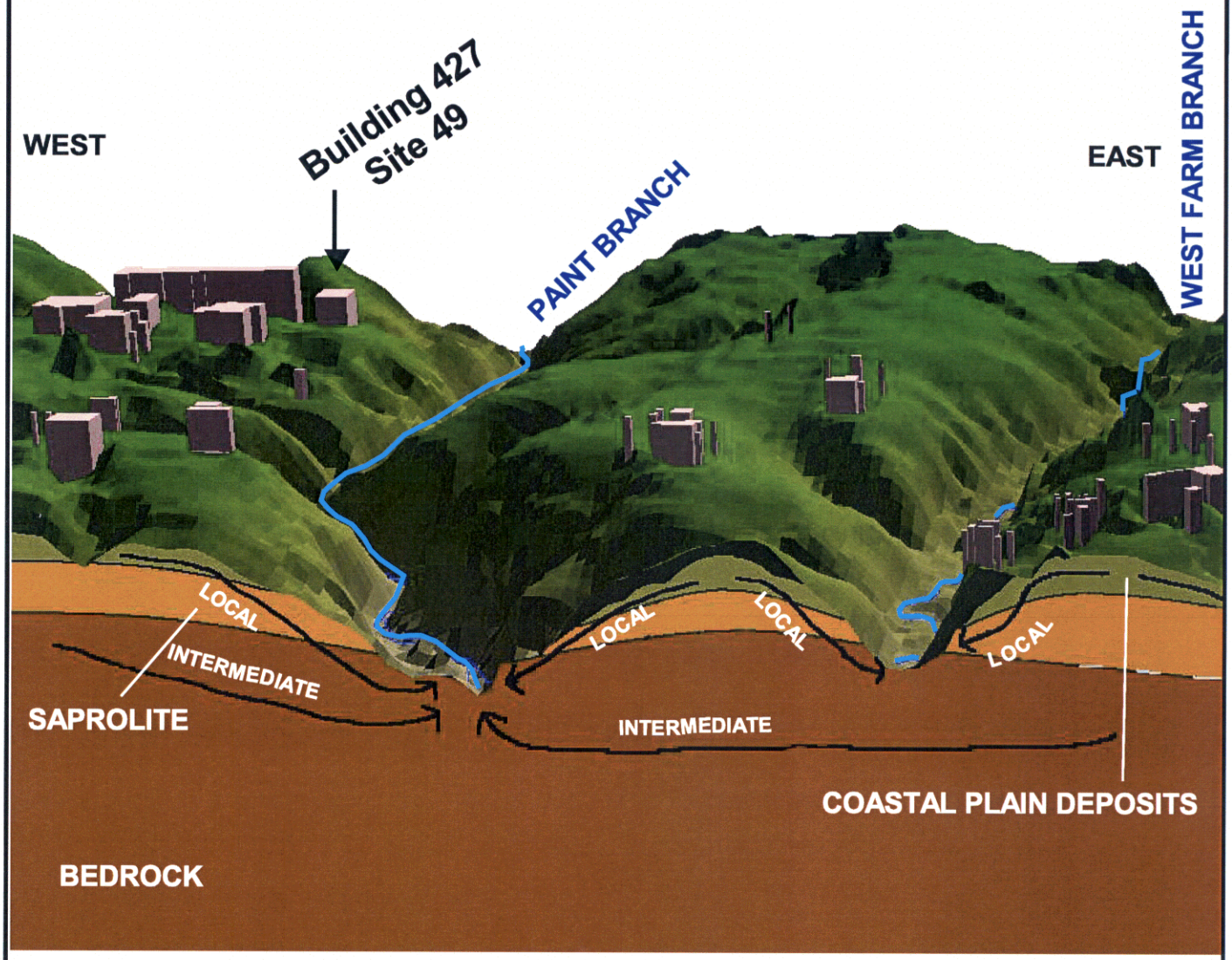

LEGEND

- Surface Topography
- Coastal Plain Deposits
- Saprolite
- Bedrock
- Conceptual Groundwater Flow Directions

0 500 1000 1500
HORIZONTAL FEET
WEST - EAST

Figure 3-5
Schematic Hydrogeologic Cross-Section
Site 49 RI Report
NSWC - White Oak
Silver Spring, Maryland

CH2MHILL

SECTION 4

Nature and Extent of Contamination

This chapter focuses on the nature and extent of contamination found in groundwater at Site 49. However, the results of surface and subsurface soil sampling, surface water sampling, and subsurface drain manhole sampling are presented as well. The discussion is divided into five parts. Section 4.1 discusses how the data are presented and evaluated. Sections 4.2 through 4.4 discuss the results of the sampling activities for each media. Within Sections 4.2 through 4.4, contaminant detections, concentrations, locations, and trends are discussed.

4.1 Data Presentation and Evaluation

4.1.1 Data Presentation

Tables 4-1 through 4-6 present analytical results for all detected chemicals and constituents from all samples analyzed. Compounds not detected in any sample for a given media are not shown in these tables. Complete analytical results for all media are presented in Appendix I. Results from field parameter analyses are presented in Appendix F.

The data are summarized in the context of the environmental and related media sampled (groundwater, surface water, soil, as well as water from sumps and drain manholes). For each medium, tables are presented listing detected concentrations for each parameter for each group of samples.

4.1.2 Data Evaluation

This chapter presents a discussion of contaminant nature and extent, including an evaluation of temporal and spatial trends, of selected contaminants and uses them to validate or revise the conceptual site model. The discussion focuses on those site-related contaminants that are most prevalent and are believed to pose unacceptable risks. Regulatory and human health-based criteria were not used to select contaminants for discussion in this chapter.

The focus on this "short list" of contaminants is not meant to serve as a formal screening out of other contaminants, but simply a way to focus the discussion. The baseline human health risk assessment presented in Chapter 6 of this report formally screens and evaluates all chemicals detected in groundwater at Site 49 in accordance with established USEPA Region III guidance.

In order to identify metals that may be of potential concern at Site 49, the data for inorganic analytes were compared to data presented in the *Background Investigation Report* (BIR) prepared by TtNUS (December 1998). The BIR was conducted to establish a base-wide background database for the property to be used for current and future investigations. Samples were collected for the various media from areas outside the sites known to be affected by facility operations. Soil sample results were also compared to USEPA Region III

risk-based criteria (RBC) for residential areas as a means to identify potential impacts to the soil that might warrant further discussion.

4.2 Perimeter Drain Samples

Water samples were collected from various components of the Building 427 perimeter drain system. Two samples were collected from sumps inside Building 427 (samples 049SMPL1002 and 049SMPU1002). Two samples were collected from manholes outside the building on the northwest and southeast corners of the building (samples 049MHSWNW and 049MHSWSE, respectively). Sample locations are shown in Figure 2-1. All four samples were analyzed for VOCs. Only the manhole sample from the northwest corner of the building (049MHSWNW) contained any detectable concentrations of VOCs: TCE was detected at a concentration of 0.33 μg/L, as well as ethylbenzene, toluene, and total xylenes at concentrations of 0.27, 0.38, and 0.91 μg/L, respectively. All these detected concentrations are estimated, below the laboratory reporting limits.

4.3 Soil

The potential source areas for TCE groundwater contamination at Site 49 included the Building 427 leaching well and the Debris Disposal Area (Figure 1-3). Soil samples collected during the leaching well excavation were analyzed for only VOCs. Soil samples from the Debris Disposal Area were analyzed for a wider range of compounds and were found to contain no significant amounts of anthropogenic chemicals in soil. Figure 2-1 presents the sampling locations, and Table 4-2 summarizes detections of chemicals and metals in soil samples collected at Site 49. The table also presents EPA Region 3 RBCs for residential soil as a comparison criteria.

4.3.1 Volatile Organic Compounds

Relatively few VOCs were detected in soil at Site 49. PCE was ubiquitous throughout the Debris Disposal Area, detected in all seven soil samples collected from this area at low (estimated) concentrations ranging from 1.5 to 3.0 μg/kg. Chloromethane was detected less frequently (in five of nine samples), at similarly low concentrations. Bromomethane and carbon disulfide (common laboratory contaminants) were detected in one sample each at concentrations of 1.4 and 1.7 μg/kg, respectively. None of these concentrations exceed EPA Region 3 RBCs for residential soil.

4.3.2 Explosives

No explosives-related compounds were detected in soil samples.

4.3.3 Pesticides and PCBs

Two pesticides, 4,4'-DDT and dieldrin, were detected in one soil sample from boring 49SB201 at estimated[4] concentrations of 2.4 and 6.6 μg/kg, respectively. None of these concentrations exceed EPA Region 3 RBCs for residential soil. No other pesticides were detected in soil.

[4] Estimated concentration because detected concentration was below laboratory reporting limit.

PCBs were not detected in any samples.

4.3.4 Semivolatile Organic Compounds

Semivolatile organic compounds were detected in samples from all seven samples associated with the Debris Disposal Area. Sixteen individual SVOCs were detected at least once. One SVOC, bis(2-ethylhexl)phthalate [BEHP], was detected in all seven samples, at concentrations ranging from 230[4] to 2,200 μg/kg. BEHP is a very commonly used chemical in plasticizers and is often detected as a laboratory or sampling equipment artifact; its detections in these samples may not represent site conditions.

Samples from boring 49SB201 contained the greatest number of individual SVOCs and the greatest concentrations. The sample from this boring contained the following SVOCs at concentrations ranging from 72[4] to 1,500 μg/kg:

Acenaphthene	Anthracene	Benzo(*a*)anthracene	Benzo(*a*)pyrene
Chrysene	Pyrene	Di-n-butylphthalate	Benzo(*b*)fluoranthene
Fluoranthene	Fluorene	Benzo(*k*)fluoranthene	Benzo(*g,h,i*)perylene
Naphthalene	Phenanthrene	BEHP	Indeno(1,2,3-*c,d*)pyrene

None of these compounds were detected at concentrations that exceed EPA Region 3 RBCs for residential soil with the exception that benzo(*a*)pyrene was detected in one 6-foot-deep sample at a concentration above this comparison criteria (see Table 4-2).

4.3.5 Metals

Metals, which are common mineral constituents of soil, were detected in all of the seven soil samples which were analyzed for metals. Detected metals included:

Aluminum	Arsenic	Barium	Beryllium
Cadmium	Calcium	Chromium	Cobalt
Copper	Iron	Lead	Magnesium
Manganese	Nickel	Potassium	Sodium
Vanadium	Zinc		

Concentrations at which these metals were detected ranged from trace levels (part-per-million; ppm) to percent levels (i.e., 10^4 ppm) for common soil mineral constituents. The only metals that were detected in one or more samples at concentrations above EPA Region 3 residential soil RBCs, are arsenic, iron, and manganese.

The results of soil sampling were also compared to background data reported in the background investigation report (TTNUS, December 1998). The data also were compared to the following reference documents for background concentrations of metals:

- Shacklette, H.T. and J.G. Boerngen, 1984. *Elemental Concentrations in Soil and Other Surficial Materials of the Conterminous United States.* US Geological Survey Professional Paper 1270.
- Dragun, J., 1991. *Elements in North American Soils.* HMCRI, Greenbelt, Maryland.

Table 4.2a summarizes minimum and maximum detected concentrations, 95% UCLs for background data, frequency of detection, and the frequency at which the detected concentrations exceed the 95% UCL for background.

The maximum detected concentration of arsenic at Site 49 was below the 95% UCLs for background at White Oak . The maximum detected concentration of iron and manganese, exceeded the calculated 95% UCLs for background for these metals. The maximum detected concentration of manganese was also greater than the maximum detected background concentration. It is unlikely, however, that these iron and manganese results indicate anthropogenic soil contamination. The metal concentrations observed in subsurface materials are highly variable, but consistent with the regional-scale ranges (i.e., for Maryland or eastern United States; Dragun, 1991) for background concentrations as noted in the reference documents.

In addition to the inter-boring variability, intra-boring variability (i.e., variations and lack of associations between individual metals and/or different soil horizons) suggest that the exceedances of background concentrations are due to natural variability rather than anthropogenic influences. For example, the sample from boring 49SB201 contained the maximum concentration for six metals and the minimum concentrations for eight metals.

4.3.6 Soil Data Summary

- TCE was not detected in any of nine soil samples.
- PCE was detected at very low concentrations in seven samples from three boring locations in the Debris Disposal Area. Other VOCs were detected sporadically throughout the site and at very low concentrations.
- SVOCs were detected throughout the site at low concentrations. One boring, 459SB201, contained the greatest number of individual SVOCs and most of the maximum detected concentrations.
- Metals were detected in all soil samples. Each soil sample contained metals at concentrations that exceeded the 95 percent UCL for background. However, the variability in concentrations detected in Site 49 samples appears to be consistent with variability expected in natural soils, based on the background data set and regional-scale reference data sets.
- Two pesticides, 4,4'-DDT and dieldrin, were detected at low concentrations.
- Explosives and PCBs were not detected in any soil samples.
- Total organic carbon present in soil samples ranged between 840 and 15,000 mg/kg.

Because it was evident that the soil in these areas was not an ongoing source of the TCE contamination in the groundwater and because the concentrations found in the soil were

either below RBCs for residential soil or, in the case of some metals, were consistent with variability expected in natural soils, risks from exposure to soil is not considered in the HHRA.

4.4 Groundwater

The investigation of groundwater quality at Site 49 included DP sampling, temporary monitoring wells, the installation and sampling of permanent monitoring wells, and sampling discrete vertical intervals of open deep boreholes using packer test methods.

As noted in Section 3, a phased approach was employed to investigate Site 49. Initial groundwater samples collected in the backfill of sanitary sewer lines as part of an unrelated investigation contained TCE, suggesting that VOCs (specifically the chlorinated solvent TCE and its degradation products) were originating from the area surrounding Building 427. This first phase of the site 49 RI included collecting screening samples from nine temporary monitoring wells and eight drive points. This groundwater screening investigation occurred in phases, with four temporary wells installed in 2001, five in June and July 2002, and the eight drive points in November 2002. The November 2002 drive points were installed through the bed of Paint Branch, with the earlier temporary wells placed in the immediate vicinity and downgradient of Building 427. Permanent monitoring wells were installed between August 2002 and February 2003 in six locations throughout Site 49. Three of these locations included nested wells designed to provide vertical delineation of contamination. The locations of all permanent and temporary sampling points are shown on Figure 2-1. To refine the vertical delineation, packer test samples were collected on 10 foot intervals (Figure 2-2) from the open boreholes of two deep monitoring wells prior to completion. The permanent monitoring wells were sampled in phases as they were installed and in subsequent partially synoptic sampling events. Concentrations of all analytes detected in groundwater are summarized in Tables 4-3 through 4-5.

A 'composite picture' of groundwater impacts can be generated from the various samples collected at Site 49. The following discussion utilizes all the data to generate this picture; however, only data from permanent monitoring wells, are used in the subsequent HHRA.

4.4.1 Volatile Organic Compounds (VOCs)

The primary VOCs detected in groundwater samples were TCE and its degradation products (*cis*-DCE, and VC). A discussion of each is presented below. The discussion of TCE degradation and its products is present in Section 5.0, Fate and Transport. Concentrations of these VOCs are tabulated in Tables 4-3 through 4-5 and are shown in Figures 4-1 through 4-5 (only TCE concentrations are show on the figures).

As noted above, the following discussion will treat TCE as the parent product and *cis*-DCE and VC as its breakdown products (discussed further in Section 5.0). TCE is a widely-used industrial solvent, whereas *cis*-DCE and VC are less common as industrial or commercial chemicals and are known degradation products of TCE.

TCE was detected in shallow groundwater during all three sampling events (June, August, and October 2002; summarized on Figures 4-1 through 4-3). TCE concentrations in shallow groundwater generally increase with distance from Building 427 towards Paint Branch

(Figure 4-4). During the most recent sampling event, TCE was detected in well 49GW203 (near the Leaching Well) at 120 μg/L and in well49GW201S (near Paint Branch) at 380 μg/L. TCE was not detected in the drive point samples collected from the bedding of Paint Branch, however.

TCE concentrations have typically decreased with time between August and October 2002. TCE in well 49GW203 decreased from 140 μg/L in August 2002 to 120 μg/L in October 2002. TCE concentrations in well 49GW201S, decreased from 730 μg/L in August 2002 to 380 μg/L in October 2002. Concentrations in monitoring well 49GW202S increased from 44 μg/L in June 2002 and at 60 μg/L in October 2002.

The vertical delineation program, summarized on Figure 4-5, consisting of permanent well clusters supplemented by data from open-borehole tests, indicated that TCE concentrations increase with depth near the source area and decrease with depth away from the source. This may be due to the complex vertical gradients and groundwater flow patterns near Paint Branch. TCE concentrations in borehole/well 49GW206D increased from 54 μg/L at approximately 175 feet MSL to 1,900 μg/L at 100 feet MSL. The permanent screen was installed in this borehole at approximately 85 feet MSL (screen midpoint elevations); TCE was detected in this horizon at 1,600 μg/L. However, this concentration declined to 140 μg/L in a subsequent sampling event from the completed wells. This may indicate a true decrease in concentrations, though the samples were collected with different methods (i.e., open borehole packer test versus low-flow sampling from the permanent well). Further downgradient, in the well 49GW201 cluster, TCE was detected in shallow groundwater (185 feet MSL) at 380 μg/L and 4,400 μg/L at 155 feet msl (at the greatest concentration detected at Site 49), then declined to 4.3 μg/L at approximately 100 feet MSL. Detected concentrations in the deepest horizon at 49GW201 remained relatively constant at low concentrations during the subsequent sampling event.

Generally, all samples contained *cis*-DCE and VC at concentrations ranging from a factor of four to several orders of magnitude less than respective TCE concentrations. The samples collected from 49GW201S and 49GW201D contained concentrations of VC two orders of magnitude lower than their respective *cis*-DCE concentrations.

The three monitoring wells installed cross-gradient of 49GW200, 49GW206S, 49GW206M, and 49GW206D, each contained TCE and *cis*-DCE. Concentrations of TCE decrease somewhat with depth, ranging from 560 μg/L in 49GW206S to 140 μg/L in 49GW206D. Concentrations of *cis*-DCE fluctuate with depth, decreasing from 150 μg/L in 49GW206S to 64 μg/L in 49GW206M, then increase to 90 μg/L in 49GW206D. The chlorinated solvents plume extends to the northern boundary of NSWC-White Oak, with TCE concentrations of 780 and 380 μg/L in the northernmost wells. The plume is more well defined to the south, with the detected concentration 60 μg/L in the sample from 49GW2025. The westernmost well sample contained TCE at a concentration of 120 μg/L. The plume is bounded to the east by Paint Branch, discussed in Section 4.5

4.4.2 SVOCs, Pesticides, and PCBs

Three SVOCs (acenaphthene, dimethylphthalate, and phenanthrene) were detected at very low concentrations in groundwater: 2.8, 7.1, and 1.3 μg/L, respectively. Each was detected in a single groundwater sample. No PCBs or pesticides were detected in Site 49 groundwater.

4.4.3 Metals

Metals were detected in both filtered (using 0.45-μm filters) and unfiltered samples from the permanent monitoring wells. The metals detected were generally consistent with those detected in soil, surface water, and with the expected geochemical signatures for natural groundwater in this environment.

Seventeen metals were detected in the filtered samples, including barium, calcium, chromium, iron, magnesium, manganese, potassium, and sodium. These metals predominated in terms of frequency of detected and magnitude of detected concentrations. Metals detected less frequently included beryllium, cadmium, copper, lead, nickel, selenium, vanadium, and zinc. The same 17 metals were detected in the unfiltered samples, with the addition of arsenic, which was not detected in the corresponding filtered samples.

- Aluminum was detected in both the filtered (3 of 11) and unfiltered (8 of 11) samples. Maximum detected concentrations were 6,800 μg/L and 35,600 μg/L in the filtered and unfiltered samples, respectively. Concentrations in filtered samples were generally much less than those in the corresponding unfiltered samples.
- Arsenic was detected in 3 of 11 unfiltered samples, at concentrations as great as 8.7 μg/L. Arsenic was not detected in any of the 11 filtered samples.
- Barium was detected in all 11 filtered and all 11 unfiltered samples, at maximum concentrations of 101 and 225 μg/L, respectively. Filtered sample concentrations generally approximated the unfiltered sample concentrations closely. One exception to this was the sample from well 49GW202S, in which the filtered sample barium concentrations was much less than that in the unfiltered sample.
- Beryllium was detected in 5 of 11 unfiltered samples (at concentrations as great as 1.9 μg/L) and in 1 of 11 filtered samples (at an estimated concentration of 0.12 μg/L).
- Cadmium was detected in both the filtered (3 of 11) and unfiltered (2 of 11) samples. Maximum detected concentrations were 0.35 μg/L and 0.46 μg/L in the filtered and unfiltered samples, respectively. Concentrations in filtered samples generally were very similar to those in the corresponding unfiltered samples.
- Calcium was detected in all 11 filtered and all 11 unfiltered samples, at maximum concentrations of 54,000 and 54,700 μg/L, respectively. Filtered sample concentrations generally approximated the unfiltered sample concentrations.
- Chromium was detected in 3 of 11 filtered samples and 8 of 11 unfiltered samples. Maximum detected concentrations were 75.5 and 910 μg/L, respectively. In general, chromium concentrations in filtered samples were much less than those detected in the unfiltered samples.
- Cobalt was detected in 6 of 11 filtered samples and 9 of 11 unfiltered samples. Maximum detected concentrations were 10.6 and 42.5 μg/L, respectively. Concentrations detected in filtered samples compared to those detected in the unfiltered samples exhibited mixed behavior. Filtered-sample concentrations of cobalt were much less than the corresponding unfiltered samples from some wells, while at other wells, the filtered- and unfiltered samples were similar.
- Copper was detected in 2 of 11 filtered samples and 4 of 11 unfiltered samples. Maximum detected concentrations were 28.6 and 166 μg/L, respectively. In general, copper concentrations in filtered samples were much less than those detected in the unfiltered samples.

- Iron was detected in 9 of 11 samples for bot the filtered and unfiltered sets of samples, with maximum detected concentrations of 14,100 and 72,400 μg/L, respectively. Iron concentrations in the filtered samples were generally much less than those in the corresponding unfiltered samples. Results are presented in Figure 4-6.
- Lead was detected in 4 of 11 filtered samples and 5 of 11 unfiltered samples. The maximum detected lead concentration in the filtered samples was 13.9 μg/L and 20.3 in the unfiltered sample, with filtered samples concentrations generally less than those in unfiltered samples.
- Magnesium was detected in all 11 filtered and all 11 unfiltered samples. The maximum detected filtered sample concentration was 13,800 μg/L; the maximum detected unfiltered concentration was 19,600 μg/L. Concentrations in filtered samples generally were very similar to those in the corresponding unfiltered samples.
- Manganese was also detected in all 11 filtered samples and all 11 unfiltered samples, with maxima of 2,290 and 2,250 μg/L, respectively. Filtered sample concentrations generally approximated those in the unfiltered samples.
- Nickel was detected in 10 of 11 filtered samples and 10 of 11 unfiltered samples. Maximum detected concentrations were 81 and 625 μg/L, respectively. Concentrations detected in filtered samples compared to those detected in the unfiltered samples exhibited mixed behavior. Filtered-sample concentrations of nickel were much less than the corresponding unfiltered samples from some wells, while at other wells, the filtered- and unfiltered samples were similar.
- Potassium was detected in all 11 filtered and all 11 unfiltered samples. The maximum detected filtered sample concentration was 11,300 μg/L; the maximum detected unfiltered concentration was 21,900 μg/L. Concentrations in filtered samples generally were very similar to those in the corresponding unfiltered samples.
- Selenium was detected in a single filtered sample and a single unfiltered sample, out of 11 each collected; detected concentrations were 5.3 μg/L in the filtered sample and 4.8 μg/L in the unfiltered sample.
- Sodium was detected in all 11 filtered and all 11 unfiltered samples. The maximum detected filtered sample concentration was 132,000 μg/L; the maximum detected unfiltered concentration was 136,000 μg/L. Concentrations in filtered samples generally were very similar to those in the corresponding unfiltered samples.
- Vanadium was detected in both the filtered (2 of 11) and unfiltered (8 of 11) samples. Maximum detected concentrations were 20.6 μg/L and 62.5 μg/L in the filtered and unfiltered samples, respectively. Concentrations in filtered samples generally approximated those in the corresponding unfiltered samples.
- Zinc was detected in 6 of 11 filtered samples and 9 of 11 unfiltered samples. Maximum detected concentrations were 47.5 and 185 μg/L, respectively. Concentrations detected in filtered samples compared to those detected in the unfiltered samples exhibited mixed behavior. Filtered-sample concentrations of zinc were much less than the corresponding unfiltered samples from some wells, while at other wells, the filtered- and unfiltered samples were similar.

4.4.4 Explosives and Perchlorate

No explosives-related compounds or perchlorate were detected in Site 49 groundwater.

4.4.5 Groundwater Summary

- TCE and its breakdown products were detected in groundwater samples collected throughout Site 49. Concentrations generally increase with distance from the postulated source near Building 427 and with depth. Concentrations exhibit mixed behavior with time, as concentrations in some horizons increased while other decreased during subsequent sampling events.
- SVOCs, pesticides, PCBs, explosives, and perchlorate were not detected at significant concentrations, nor with significant frequency. Accordingly, no anthropogenic influences from these chemicals appear to affect Site 49 groundwater quality.
- The plume is bounded to the east by Paint Branch and its extent is undefined to the north at the NSWC property boundary. The plume is defined to the west near the postulated sources and the south, by patterns of decreasing concentrations.
- The plume's boundary to the north has not been defined, as the navy had not received access rights to the Maryland National Capital Park and Planning Commission (MNCPPC) property at the time of the RI. Permission has since been granted to install a well on this property, which will take place concurrent with the remedial design process.

4.5 Surface Water

Surface water samples were collected from three locations along Paint Branch (Figure 2-1). These samples were analyzed for VOCs, SVOCs, total and dissolved metals, and hardness. Table 4-6 summarizes detections of chemicals and metals in surface water.

4.5.1 Volatile Organic Compounds

No VOCs were detected in surface water samples.

4.5.2 Semivolatile Organic Compounds

Two SVOCs, 4-chloro-3-methylphenol and bis(2-ethylhexyl)phthalate were detected in the surface water samples at low concentrations, ranging from 1.4 to 3.9 μg/L.

4.5.3 Metals

Paint Branch surface water appears to be of the general Ca-Na-Mg-K association, which is consistent with the background data set discussed in the BIR. Other detected metals included barium, iron, manganese, nickel, and vanadium. The minor constituent metals were detected at concentrations ranging from 1 to 511 μg/L. All detected concentrations were less than the corresponding 95% UCLs for background surface water quality.

Dissolved metals concentration patterns generally parallel the total metals concentrations. In addition, surface water quality data generally are consistent with the patterns of metals detected in groundwater.

4.5.4 Surface Water Summary

Surface water quality data from Paint Branch adjacent to Site 49 are consistent with the background data set discussed in the BIR and show no anthropogenic influences from Site 49. In addition, surface water data are similar to the inorganic geochemistry of groundwater at Site 49. The absence of detectable concentrations of the VOCs detected in Site 49 groundwater indicates that any groundwater contamination discharged to Paint Branch has no adverse effect on surface water quality.

Table 4-1
Detections In Sump and Manhole Water Samples
Site 49 RI Report
NSWC - White Oak, Silver Spring, Maryland

Station ID	49MHSWNW		49MHSWSE		49SMPU		49SMPL	
Sample ID	049MHSWNW11		049MHSWSE29		049SMPU1002		049SMPL1002	
Sample Date	10/08/02		10/08/02		10/08/02		10/08/02	
Chemical Name								
Volatile Organic Compounds (UG/L)								
Ethylbenzene	0.27	L	0.5	UL	0.5	UL	0.5	UL
Toluene	0.68	L	0.5	UL	0.5	UL	0.5	UL
Trichloroethene	0.33	L	0.5	UL	0.5	UL	0.5	UL
Xylene, total	0.91	L	0.5	UL	0.5	UL	0.5	UL

NA - Not analyzed
B - Blank contamination
L - Biased low
R - Unusable
U - Undetected

UL - Undetected, limit biased low

Table 4-2
Detections In Soil Samples
Site 49 RI Report
NSWC - White Oak, Silver Spring, Maryland

Station ID	EPA Region 3	49SB200		49SB201	49SB202			49SB203		
Sample ID	Residential	049SU2000901 *	049SU2001101 *	049SU2010601	049SU2020601	049SU2021001	049SU2021201	049SU2030401	049SU2030601	049SU2031001
Sample Date	RBC	06/17/02	06/17/02	07/09/02	07/10/02	07/10/02	07/10/02	07/09/02	07/09/02	07/09/02
Depth of Sample (ft)		9	11	6	6	10	12	4	6	10
Chemical Name										
Volatile Organic Compounds (UG/KG)										
Bromomethane	110,000	12 U	1.4 J	13 U	15 U	12 U	13 U	13 U	14 U	14 U
Carbon disulfide	7,800,000	12 U	12 U	13 U	15 U	12 U	13 U	1.7 J	14 U	14 U
Chloromethane	-	12 U	2.6 J	3.4 J	15 U	12 U	13 U	2.7 J	3 J	4.2 J
Tetrachloroethene	1,200	12 U	12 U	1.9 J	2.1 J	1.5 J	1.6 J	3 J	2.1 J	2.5 J
Semivolatile Organic Compounds (UG/KG)										
Acenaphthene	4,700,000	NA	NA	140	9.5	3.5 U	3.6 U	3.8 U	3.7 U	3.6 U
Anthracene	23,000,000	NA	NA	360	12	3.5 U	3.6 U	3.8 U	3.7 U	3.6 U
Benzo(a)anthracene	870	NA	NA	700	32	3.5 U	3.6 U	51	5.2	3.6 U
Benzo(a)pyrene	87	NA	NA	590	24	3.5 U	3.6 U	45	4.1	3.6 U
Benzo(b)fluoranthene	870	NA	NA	730	35	3.5 U	3.6 U	67	7	3.6 U
Benzo(g,h,i)perylene	-	NA	NA	320 J	11	3.5 U	3.6 U	24	3.7 U	3.6 U
Benzo(k)fluoranthene	8,700	NA	NA	310	13	3.5 U	3.6 U	21	4.8	3.6 U
Chrysene	8,700	NA	NA	620	32	3.5 U	3.6 U	46	4.8	3.6 U
Di-n-butylphthalate	7,800,000	NA	NA	72 J	360 U	350 U	360 U	380 U	370 U	360 U
Fluoranthene	3,100,000	NA	NA	1,500	84 L	3.5 U	3.6 U	76	8.8	3.6 U
Fluorene	3,100,000	NA	NA	130	11	3.5 U	3.6 U	3.8 U	3.7 U	3.6 U
Indeno(1,2,3-cd)pyrene	870	NA	NA	280 J	11	3.5 U	3.6 U	23	3.7 U	3.6 U
Naphthalene	1,600,000	NA	NA	75	3.6 U	3.5 U	3.6 U	3.8 U	3.7 U	3.6 U
Phenanthrene	-	NA	NA	1,300	81	3.5 U	3.6 U	16	3.7 U	3.6 U
Pyrene	2,300,000	NA	NA	1,300	68	3.5 U	3.6 U	87	7.4	3.6 U
bis(2-Ethylhexyl)phthalate	46,000	NA	NA	430	520	230 J	720	2,200	580	330 J
Pesticide/Polychlorinated Biphenyls (UG/KG)										
4,4'-DDT	1,900	NA	NA	2.4 J	3.6 U	3.5 U	3.6 U	3.8 U	3.7 U	3.6 U
Dieldrin	40	NA	NA	6.6 J	3.6 U	3.5 U	3.6 U	3.8 U	3.7 U	3.6 U
Explosives (UG/KG)										
No Detections										
Total Metals (MG/KG)										
Aluminum	78,000	NA	NA	16,500	38,000	27,600	23,600	17,800	21,900	29,300
Arsenic	0.43	NA	NA	6.7	2.3 J	0.9 J	1.4 K	2.7	1.9 K	0.75 J
Barium	5,500	NA	NA	91.8	174	117	108	69.8	101	166
Beryllium	162	NA	NA	0.69	3.4	2.2	2.1	0.96	1.7	2
Cadmium	-	NA	NA	0.41 J	0.31 B	0.33 J	0.46 J	0.2 J	0.33 J	0.47 J

NA - Not analyzed
B - Blank contamination
J - Estimated
K - Biased high

L - Biased low
R - Unusable
U - Undetected
UL - Undetected, limit biased low

* Pest/PCB analysis not available due to low sample volume

Table 4-2
Detections In Soil Samples
Site 49 RI Report
NSWC - White Oak, Silver Spring, Maryland

Station ID	EPA Region 3	49SB200		49SB201	49SB202			49SB203		
Sample ID	Residential	049SU2000901 *	049SU2001101 *	049SU2010601	049SU2020601	049SU2021001	049SU2021201	049SU2030401	049SU2030601	049SU2031001
Sample Date	RBC	06/17/02	06/17/02	07/09/02	07/10/02	07/10/02	07/10/02	07/09/02	07/09/02	07/09/02
Depth of Sample (ft)		9	11	6	6	10	12	4	6	10
Chemical Name										
Calcium	-	NA	NA	3,000	461 J	133 J	190 J	456 J	295 J	210 J
Chromium	230	NA	NA	34.8 J	28.3 J	22.7 J	21.1 J	21.4 J	24.3 J	32.1 J
Cobalt	1,600	NA	NA	4.1 J	24.9 J	9.8 J	14.4 J	11.3	20.1	15.5
Copper	3,100	NA	NA	10.8	68.1	37.7	35.3	25.9	47.1	16.1
Iron	23,000	NA	NA	37,400	35,600	30,900	37,000	22,300	30,600	32,000
Lead	-	NA	NA	20.5 K	15 K	8.7 K	8.4 K	9.3 K	10.4 K	9.7 K
Magnesium	-	NA	NA	1,230	7,650	5,490	4,870	2,770	5,210	8,900
Manganese	1,600	NA	NA	176	2,090	336	741	362	720	310
Mercury	7.8	NA	NA	0.05	0.02 J	0.02 U	0.02 U	0.03 J	0.02 J	0.02 U
Nickel	1,600	NA	NA	7.2 K	34.7 K	23.7 K	26.3 K	15.8 K	24.2 K	30.9 K
Potassium	-	NA	NA	891	7,510	4,780	4,350	2,230	4,430	7,350
Sodium	-	NA	NA	35.6 U	93.9 J	33.6 U	33 U	78.7 B	87.6 B	91.8 B
Vanadium	78	NA	NA	43.9	46.4	31.2	30.6	31.8	35.9	45.4
Zinc	23,000	NA	NA	31.2 K	99	76.1	73.8	42.7	72.9 K	94.5 K
Wet Chemistry (MG/KG)										
% Solids		93	93	90	92	94	93	88	90	93
Carbon		NA	NA	5,700	2,000	1,400	840	15,000	10,000	2,600
pH		NA	NA	7.6	4.8	4.5	4.6	5	4	6.3
#####	- Indicates compund was detected									
#####	- Indicates compound detected above RBC for residential soil									

NA - Not analyzed
B - Blank contamination
J - Estimated
K - Biased high

L - Biased low
R - Unusable
U - Undetected
UL - Undetected limit biased low

* Pest/PC sis not available due to low sample volume

TABLE 4-2A
Soil Minimum and Maximum Detected Concentrations, 95% UCLs for Background Data, Frequency of Detection, and the Frequency at Which the Detected Concentrations Exceed the 95% UCL for Background

Metal	Frequency of Detection	Minimum Concentration Detected (mg/kg)	Maximum Concentration Detected (mg/kg)	95% UCL for Background (mg/kg)	Frequency of Exceedance of 95% UCL	Residential Risk-Based Concentrations (mg/kg)
Aluminum	7 of 7	16,500	38,000	20,961	5 of 7	78,000
Arsenic	7 of 7	0.75*	6.7	12.15	0 of 7	0.43
Barium	7 of 7	69.8	174	40.09	7 of 7	5,500
Beryllium	7 of 7	0.69	3.4	2.37	1 of 7	162
Cadmium	6 of 7	0.2*	0.41*	0.18	6 of 6	-
Calcium	7 of 7	133*	3,000	247	4 of 7	-
Chromium	7 of 7	21.11	32.1	41.05	0 of 7	230 (as hex)
Cobalt	7 of 7	4.11	24.91	16.6	1 of 7	1,600
Copper	7 of 7	16.1	47.1	21.62	5 of 7	3,100
Iron	7 of 7	22,500	37,400	26.681	6 of 7	23,000
Lead	7 of 7	8.42	20.52	21.23	0 of 7	-
Magnesium	7 of 7	1,230	8,900	2,987	5 of 7	-
Manganese	7 of 7	176	2,090	503	3 of 7	1,600
Mercury	4 of 7	0.021	0.05	0.05	0 of 4	7.8 (methyl)
Nickel	7 of 7	7.2*	34.72	13.84	6 of 7	1,600
Potassium	7 of 7	891	7,510	2,792	5 of 7	-
Sodium	1 of 7	93.91	93.91	69.4	1 of 1	-
Vanadium	7 of 7	30.6	46.4	44.31	2 of 7	550
Zinc	7 of 7	31.22	99	84.2	2 of 7	23,000

*Estimated concentration because detected concentration was below laboratory reporting limit.

Table 4-3
Detections In Groundwater Samples from Drive Points along Point Branch Bed
Site 49 RI Report
NSWC - White Oak, Silver Spring, Maryland

Station ID	49DP301		49DP302		49DP303		49DP304		49DP305		49DP306		49DP307		49DP308	
Sample ID	049DP30102		049DP30203		049DP30302		049DP30402		049DP30503		049DP30602		049DP30702		049DP30802	
Sample Date	11/20/02		11/20/02		11/20/02		11/20/02		11/22/02		11/22/02		11/22/02		11/22/02	
Depth of Sample (ft)	2		3		2		2		3		2		2		2	
Chemical Name																
Volatile Organic Compounds (UG/L)																
1,1-Dichloroethane	0.5	U	0.5	U	0.5	U	0.5	U	0.5	U	0.5	U	0.29	J	0.5	U
1,1-Dichloroethene	0.5	U	0.5	U	0.5	U	0.5	U	0.5	U	0.5	U	0.5	U	0.5	U
Acetone	7.7	B	9.2	B	5	U	4	B	20	B	4.8	B	9.2	B	6.7	B
Carbon disulfide	0.5	U	0.5	U	0.99		0.5	U	1.1		1.2		0.5	U	0.38	J
Chloroform	0.5	U	0.5	U	0.5	U	0.5	U	0.5	U	0.5	U	0.5	U	0.5	U
Chloromethane	0.5	U	0.5	U	0.5	U	0.5	U	0.5	J	0.5	U	0.32	J	0.5	U
Toluene	0.5	U	0.5	U	0.5	U	0.5	U	0.5	U	0.5	U	0.5	U	0.5	U
Trichloroethene	0.5	U	0.5	U	0.5	U	0.75		0.37	J	1.3		1.1		1.2	
Vinyl chloride	0.5	U	0.5	U	0.5	U	0.5	U	0.5	U	0.79		0.5	U	0.5	U
cis-1,2-Dichloroethene	0.5	U	0.5	U	0.5	U	0.5	U	0.5	U	3.1		0.63		0.24	J
trans-1,2-Dichloroethene	0.5	U	0.5	U	0.5	U	0.5	U	0.5	U	0.5	U	0.5	U	0.5	U

NA - Not analyzed
B - Blank contamination
J - Estimated
UJ - Undetected, estimated limit
U - Undetected

Table 4-3A
Detections In Groundwater Samples from Temporary Wells
Site 49 RI Report
NSWC - White Oak, Silver Spring, Maryland

Station ID	400DP001	400DP002	400DP003	400DP004	49DP205	49DP206	49DP207	49DP209	49DP210
Sample ID	400DP01-25	400DP002-82	400DP003-53	400DP004-48	049DP20562	049DP20636	049DP20763	049DP20946	049DP21032
Sample Date	08/21/01	11/07/01	11/07/01	11/08/01	06/27/02	07/01/02	06/30/02	06/30/02	07/02/02
Chemical Name									
Volatile Organic Compounds (UG/L)									
1,1-Dichloroethane	1 U	0.6 J	1 U	1 U	0.5 UJ	0.5 UJ	0.5 UJ	0.86 J	0.5 UJ
1,1-Dichloroethene	1 U	1	1 U	1 U	0.5 UJ	0.21 J	0.5 UJ	4.2 J	0.5 UJ
Acetone	1.22 J	5 U	20	6	1.9 B	13 B	4.1 B	5 UJ	2.9 B
Carbon disulfide	1 U	1 U	1 U	1 U	0.5 UJ	0.21 J	0.5 UJ	0.5 UJ	0.5 UJ
Chloroform	2.62	1 U	1 U	10	0.5 UJ	0.38 J	0.92 J	0.66 J	1.8 J
Chloromethane	1 U	1 U	1 U	1 U	0.5 UJ	0.5 UJ	0.5 UJ	0.5 UJ	0.5 UJ
Toluene	1 U	1 U	1 U	1 U	0.5 UJ	0.63 J	0.45 J	0.66 J	0.34 J
Trichloroethene	1.6	1,000	5	1 U	17 J	17 J	67 J	1,600 J	44 J
Vinyl chloride	1 U	2	1 U	1 U	0.5 UJ	0.5 UJ	0.5 UJ	1.7 J	0.5 UJ
cis-1,2-Dichloroethene	1 U	200	1	1 U	4.3 J	6.3 J	16 J	360 J	6.9 J
trans-1,2-Dichloroethene	1 U	30 J	1 U	1 U	0.5 UJ	0.29 J	0.5 UJ	17 J	0.5 UJ

NA - Not analyzed
B - Blank contamination
J - Estimated
UJ - Undetected, estimated limit
U - Undetected

Table 4-4
Detections In Monitoring Well Samples
Site 49 RI Report
NSWC - White Oak, Silver Spring, Maryland

Station ID	49GW200		49GW201D		49GW201DD	49GW201S		
Sample ID	049GW2000001	049GW2000002	049GW201D001	049GW201D002	049GW201DD001	049GW201S001	049GW201S002	049GW201S9902
Sample Date	08/02/02	10/10/02	08/02/02	10/10/02	02/10/03	08/02/02	10/10/02	10/10/02
Notes								Duplicate
Chemical Name								
Volatile Organic Compounds (UG/L)								
1,1,1-Trichloroethane	50 UJ	0.5 U	50 UJ	0.5 U	10 U	5 UJ	0.5 U	0.5 U
1,1-Dichloroethane	50 UJ	1.1	50 UJ	1.9 K	10 U	5 UJ	0.5 U	0.5 U
1,1-Dichloroethene	50 UJ	2.1	50 UJ	11 K	10 U	5 UJ	1.1	0.99
1,2-Dibromoethane	65 J	0.5 U	50 UJ	0.5 U	10 U	5 UJ	0.5 U	0.5 U
1,2-Dichloropropane	50 UJ	0.5 U	50 UJ	0.5 U	10 U	5 UJ	0.5 U	0.5 U
Acetone	500 R	250 R	610 R	1,300 R	13 B	260 R	59 R	49 B
Bromoform	50 UJ	0.5 U	50 UJ	0.5 U	10 U	5 UJ	0.5 U	0.5 U
Bromomethane	50 UJ	0.5 U	50 UJ	0.26 K	10 U	5 UJ	0.5 U	0.5 U
Chloroform	50 UJ	0.5 U	50 UJ	0.5 U	2.6 J	5 UJ	0.5 U	0.5 U
Cyclohexane	50 UJ	0.5 U	50 UJ	0.5 U	10 U	5 UJ	0.5 U	0.5 U
Methane	73 J	NA	61 J	NA	NA	27 J	NA	NA
Methyl-tert-butyl ether (MTBE)	50 UJ	0.5 U	50 UJ	0.5 U	10 U	5 UJ	0.5 U	0.5 U
Styrene	41 J	0.5 U	50 UJ	0.5 U	10 U	5 UJ	0.5 U	0.5 U
Tetrachloroethene	50 UJ	0.5 U	50 UJ	0.5 U	10 U	5 UJ	0.5 U	0.5 U
Toluene	50 UJ	0.5 U	50 UJ	0.5 U	1.8 J	5 UJ	0.5 U	0.5 U
Trichloroethene	690 J	780 J	3,300	4,400	6.5 J	730 J	380 L	310 J
Vinyl chloride	50 UJ	0.96	50 UJ	5.7 K	10 U	5 UJ	0.59	0.57
cis-1,2-Dichloroethene	130 J	140 J	600 J	1,100	1.3 J	150 J	100 L	110 J
trans-1,2-Dichloroethene	20 J	29	31 J	46 K	10 U	6.9 J	4.8	4.4
Semivolatile Organic Compounds (UG/L)								
Acenaphthene	5.3 U	NA	5.3 U	NA	NA	5.3 U	NA	NA
Dimethyl phthalate	7.1	NA	5.3 U	NA	NA	5.3 U	NA	NA
Phenanthrene	5.3 U	NA	5.3 U	NA	NA	5.3 U	NA	NA
Explosives (UG/L)								
No Detections								
Unfiltered Metals (UG/L)								
Aluminum	956	NA	783	NA	120 B	528	NA	NA
Arsenic	2.8 U	NA	2.8 U	NA	2.3 U	2.8 U	NA	NA
Barium	113 J	NA	102 J	NA	27.2 J	26.6 J	NA	NA

NA - Not analyzed
B - Blank contamination
J - Estimated
K - Biased high
L - Biased low

R - Unusable
U - Undetected
UJ - Undetected, estimated limit
UL - Undetected, limit biased low

Table 4-4
Detections In Monitoring Well Samples
Site 49 RI Report
NSWC - White Oak, Silver Spring, Maryland

Station ID	49GW200		49GW201D		49GW201DD	49GW201S		
Sample ID	049GW2000001	049GW2000002	049GW201D001	049GW201D002	049GW201DD001	049GW201S001	049GW201S002	049GW201S9902
Sample Date	08/02/02	10/10/02	08/02/02	10/10/02	02/10/03	08/02/02	10/10/02	10/10/02
Notes								Duplicate
Beryllium	0.1 U	NA	0.14 J	NA	0.1 U	0.1 U	NA	NA
Cadmium	0.46 J	NA	0.21 J	NA	0.3 U	0.2 U	NA	NA
Calcium	54,700	NA	25,700	NA	8,510 K	17,000	NA	NA
Chromium	15.9	NA	15.5	NA	2.1 B	12.7	NA	NA
Cobalt	1.5 J	NA	0.71 J	NA	0.5 U	1.4 J	NA	NA
Copper	4.7 B	NA	3 B	NA	3.5 B	4.2 B	NA	NA
Iron	1,680	NA	4,250	NA	46.1 B	778	NA	NA
Lead	1.6 U	NA	1.6 U	NA	1 UL	1.6 U	NA	NA
Magnesium	14,600	NA	9,530	NA	4,150 J	7,150	NA	NA
Manganese	253	NA	426	NA	9.1 J	30.8	NA	NA
Nickel	18.1 J	NA	11.3 J	NA	1.5 B	10.8 J	NA	NA
Potassium	9,820	NA	5,020	NA	12,300	3,320 J	NA	NA
Selenium	2.5 U	NA	2.5 U	NA	1.6 U	3.1 B	NA	NA
Sodium	14,900	NA	11,300	NA	45,400 K	13,400	NA	NA
Vanadium	1.4 J	NA	0.93 J	NA	1.8 B	0.9 J	NA	NA
Zinc	17.9 J	NA	12.3 J	NA	4.4 B	17.3 J	NA	NA
Filtered Metals (UG/L)								
Aluminum	23.1 U	NA	23.1 U	NA	49 B	46 J	NA	NA
Barium	101 J	NA	91.7 J	NA	38.3 J	24.6 J	NA	NA
Beryllium	0.1 U	NA	0.1 U	NA	0.1 U	0.1 U	NA	NA
Cadmium	0.35 J	NA	0.24 J	NA	0.3 U	0.35 J	NA	NA
Calcium	54,300	NA	25,200	NA	14,100 K	17,000	NA	NA
Chromium	0.5 U	NA	0.5 U	NA	1.4 B	0.74 J	NA	NA
Cobalt	0.57 J	NA	0.68 J	NA	0.5 U	0.5 U	NA	NA
Copper	1.4 B	NA	0.7 U	NA	0.5 U	3.2 B	NA	NA
Iron	49 J	NA	2,670	NA	20.6 B	42.7 J	NA	NA
Lead	1.6 U	NA	1.6 U	NA	1 UL	1.6 U	NA	NA
Magnesium	13,800	NA	9,370	NA	4,430 J	6,960	NA	NA
Manganese	213	NA	408	NA	23.6	17.1	NA	NA
Nickel	2.8 J	NA	2.9 J	NA	2.6 B	4.3 J	NA	NA
Potassium	9,620	NA	4,840 J	NA	8,210	3,360 J	NA	NA
Selenium	2.5 U	NA	2.5 U	NA	1.6 U	4 B	NA	NA
Sodium	14,600	NA	11,800	NA	43,000 K	13,500	NA	NA
Vanadium	0.8 U	NA	0.8 U	NA	0.99 B	0.8 U	NA	NA

NA - Not analyzed
B - Blank contamination
J - Estimated
K - Biased high
L - Biase

R - Unusable
U - Undetected
UJ - Undetected, estimated limit
UL - Undetected. limit biased low

Table 4-4
Detections In Monitoring Well Samples
Site 49 RI Report
NSWC - White Oak, Silver Spring, Maryland

Station ID	49GW200		49GW201D		49GW201DD	49GW201S		
Sample ID	049GW2000001	049GW2000002	049GW201D001	049GW201D002	049GW201DD001	049GW201S001	049GW201S002	049GW201S9902
Sample Date	08/02/02	10/10/02	08/02/02	10/10/02	02/10/03	08/02/02	10/10/02	10/10/02
Notes								Duplicate
Zinc	14 J	NA	8.6 J	NA	4.9 B	32.1	NA	NA
Wet Chemistry (MG/L)								
Alkalinity	150	NA	80	NA	140	39	NA	NA
Chloride	31	NA	35	NA	4.8	25	NA	NA
Nitrate	0.31 J	NA	0.19 J	NA	0.1 UL	0.57 J	NA	NA
Nitrogen	0.16	NA	0.1 U	NA	0.1 U	0.1 U	NA	NA
Phosphorus	NA	NA	NA	NA	NA	NA	NA	NA
Sulfate	16	NA	3.8	NA	8.4	8.4	NA	NA

NA - Not analyzed
B - Blank contamination
J - Estimated
K - Biased high
L - Biased low

R - Unusable
U - Undetected
UJ - Undetected, estimated limit
UL - Undetected, limit biased low

Table 4-4
Detections In Monitoring Well Samples
Site 49 RI Report
NSWC - White Oak, Silver Spring, Maryland

Station ID	49GW202D		49GW202S				49GW203				49GW204			
Sample ID	049GW202D001		049GW2020001		049GW2029901		049GW2020002		049GW2030001		049GW2030002		049GW2040001		049GW2040002	
Sample Date	02/11/03		08/01/02		08/01/02		10/09/02		08/02/02		10/09/02		08/01/02		10/09/02	
Notes					Duplicate											
Chemical Name																
Volatile Organic Compounds (UG/L)																
1,1,1-Trichloroethane	1.2	J	0.5	UJ	0.5	UJ	0.5	U	0.5	UJ	0.5	UJ	0.5	UJ	0.5	UJ
1,1-Dichloroethane	10	U	0.5	UJ	0.5	UJ	0.5	U	0.5	UJ	0.5	UJ	0.5	UJ	0.5	UJ
1,1-Dichloroethene	10	U	0.5	UJ	0.5	UJ	0.5	U	0.21	J	0.27	J	0.5	UJ	0.5	UJ
1,2-Dibromoethane	10	U	0.5	UJ	0.5	UJ	0.5	U	0.5	UJ	0.5	UJ	0.5	UJ	0.5	UJ
1,2-Dichloropropane	10	U	0.5	UJ	0.5	UJ	0.5	U	0.5	UJ	0.5	UJ	0.5	UJ	0.83	J
Acetone	10	U	2.3	J	2.7	J	1.3	B	5	R	5	R	3	J	5	R
Bromoform	10	U	0.5	UJ	0.23	J	0.5	U	0.5	UJ	0.5	UJ	0.5	UJ	0.5	UJ
Bromomethane	10	U	0.5	UJ	0.5	UJ	0.5	U	0.5	UJ	0.5	UJ	0.5	UJ	0.5	UJ
Chloroform	10	U	2.7	J	2.8	J	2.1	B	0.5	UJ	0.5	UJ	11	J	8.9	J
Cyclohexane	10	U	0.88	J	0.7	J	0.5	U	0.5	UJ	0.5	UJ	0.5	UJ	0.5	UJ
Methane	NA		3.5	J	4.1	J	NA		100	J	NA		3.6	J	NA	
Methyl-tert-butyl ether (MTBE)	10	U	0.5	UJ	0.5	UJ	0.5	U	0.5	UJ	0.5	UJ	0.5	UJ	0.5	UJ
Styrene	10	U	0.5	UJ	0.5	UJ	0.5	U	0.5	UJ	0.5	UJ	0.5	UJ	0.5	UJ
Tetrachloroethene	10	U	0.48	J	0.45	J	0.5	U	0.5	UJ	0.23	B	0.5	UJ	0.5	UJ
Toluene	10	U	0.5	UJ	0.5	UJ	0.5	U	0.5	UJ	0.5	UJ	0.5	UJ	0.5	UJ
Trichloroethene	22		37	J	32	J	60		140		120		0.5	UJ	0.27	B
Vinyl chloride	10	U	0.5	UJ	0.5	UJ	0.5	U	0.5	UJ	0.5	UJ	0.5	UJ	0.5	UJ
cis-1,2-Dichloroethene	3	J	5.2	J	5.3	J	7.9		15	J	18	J	0.5	UJ	0.5	UJ
trans-1,2-Dichloroethene	10	U	0.5	UJ	0.5	UJ	0.5	U	0.5	UJ	0.5	UJ	0.5	UJ	0.5	UJ
Semivolatile Organic Compounds (UG/L)																
Acenaphthene	NA		5.6	R	5.6	R	NA		2.8	J	NA		5.3	U	NA	
Dimethyl phthalate	NA		5.6	R	5.6	R	NA		5.3	U	NA		5.3	U	NA	
Phenanthrene	NA		5.6	R	5.6	R	NA		1.3	J	NA		5.3	U	NA	
Explosives (UG/L)																
No Detections																
Unfiltered Metals (UG/L)																
Aluminum	62.2	B	29,000		25,600		NA		88.8	J	NA		2,840		NA	
Arsenic	2.3	U	6.4	J	8.6	J	NA		2.8	U	NA		2.8	U	NA	
Barium	75.6	J	190	J	170	J	NA		81.7	J	NA		85.9	J	NA	

NA - Not analyzed
B - Blank contamination
J - Estimated
K - Biased high
L - Bias

R - Unusable
U - Undetected
UJ - Undetected, estimated limit
UL - Undetected limit biased low

Table 4-4
Detections In Monitoring Well Samples
Site 49 RI Report
NSWC - White Oak, Silver Spring, Maryland

Station ID	49GW202D	49GW202S			49GW203		49GW204	
Sample ID	049GW202D001	049GW2020001	049GW2029901	049GW2020002	049GW2030001	049GW2030002	049GW2040001	049GW2040002
Sample Date	02/11/03	08/01/02	08/01/02	10/09/02	08/02/02	10/09/02	08/01/02	10/09/02
Notes			Duplicate					
Beryllium	0.1 U	1.7 J	1.5 J	NA	0.14 J	NA	0.46 J	NA
Cadmium	0.33 B	0.2 U	0.2 U	NA	0.2 U	NA	0.2 U	NA
Calcium	20,500	19,200	18,300	NA	24,600	NA	16,100	NA
Chromium	3.1 B	910	769	NA	0.68 B	NA	104	NA
Cobalt	0.5 U	29 J	25.5 J	NA	4.4 J	NA	10.8 J	NA
Copper	10.2 J	80.5	67.1	NA	1.4 B	NA	21.6 B	NA
Iron	49.2 B	41,700	35,900	NA	9,150	NA	9,880	NA
Lead	20.3 L	16	14.7	NA	1.6 U	NA	5.3 B	NA
Magnesium	10,200 K	14,100	13,100	NA	11,200	NA	7,700	NA
Manganese	29.3	857	778	NA	2,250	NA	935	NA
Nickel	14 J	625	528	NA	13.5 J	NA	74.3	NA
Potassium	5,520	18,700	17,400	NA	6,420	NA	5,550	NA
Selenium	1.6 U	2.5 U	2.8 B	NA	2.5 U	NA	2.5 U	NA
Sodium	25,000 K	25,100	25,200	NA	33,200	NA	17,600	NA
Vanadium	0.75 B	39.7 J	34.6 J	NA	1.2 J	NA	2.8 J	NA
Zinc	57.8	143	132	NA	17.1 J	NA	98.2	NA
Filtered Metals (UG/L)								
Aluminum	46 B	262	219	NA	23.1 U	NA	48.2 B	NA
Barium	75.1 J	26.9 J	26.3 J	NA	83.5 J	NA	68.7 J	NA
Beryllium	0.1 U	0.1 U	0.1 U	NA	0.1 U	NA	0.12 J	NA
Cadmium	0.3 U	0.2 U	0.2 U	NA	0.2 U	NA	0.2 U	NA
Calcium	20,400	14,900	14,500	NA	24,600	NA	14,800	NA
Chromium	0.87 B	8.6 B	5.3 B	NA	0.5 U	NA	0.5 U	NA
Cobalt	0.5 U	8 J	7.5 J	NA	4 J	NA	3 J	NA
Copper	6.8 J	3.8 B	3.1 B	NA	1.5 B	NA	3.8 B	NA
Iron	14.4 B	738	659	NA	9,350	NA	6,080	NA
Lead	13.9 L	1.6 U	2.1 B	NA	1.6 U	NA	1.6 U	NA
Magnesium	10,100 K	6,420	6,210	NA	10,900	NA	7,010	NA
Manganese	27.9	336	328	NA	2,290	NA	831	NA
Nickel	13.5 J	38.9 J	47.7	NA	12.9 J	NA	11.3 J	NA
Potassium	5,510	6,310	6,330	NA	6,080	NA	4,480 J	NA
Selenium	1.6 U	2.5 U	2.5 U	NA	2.5 U	NA	2.5 U	NA
Sodium	25,000 K	20,800	20,600	NA	31,800	NA	15,900	NA
Vanadium	0.51 B	0.8 U	0.8 U	NA	0.8 U	NA	0.8 U	NA

NA - Not analyzed
B - Blank contamination
J - Estimated
K - Biased high
L - Biased low

R - Unusable
U - Undetected
UJ - Undetected, estimated limit
UL - Undetected, limit biased low

Table 4-4
Detections In Monitoring Well Samples
Site 49 RI Report
NSWC - White Oak, Silver Spring, Maryland

Station ID	49GW202D	49GW202S			49GW203		49GW204	
Sample ID	049GW202D001	049GW2020001	049GW2029901	049GW2020002	049GW2030001	049GW2030002	049GW2040001	049GW2040002
Sample Date	02/11/03	08/01/02	08/01/02	10/09/02	08/02/02	10/09/02	08/01/02	10/09/02
Notes			Duplicate					
Zinc	39.5 B	47.5	42	NA	12 J	NA	41.6	NA
Wet Chemistry (MG/L)								
Alkalinity	24	1 U	47	NA	24	NA	38	NA
Chloride	78	25	23	NA	100	NA	34	NA
Nitrate	0.3 L	42	0.14	NA	0.1 UJ	NA	1.4	NA
Nitrogen	0.1 UL	0.1 U	0.1 U	NA	0.1 U	NA	0.1 U	NA
Phosphorus	NA	1	0.1 U	NA	NA	NA	0.1 U	NA
Sulfate	13	12	14	NA	6.4	NA	2.5	NA

NA - Not analyzed
B - Blank contamination
J - Estimated
K - Biased high
L - Bias

R - Unusable
U - Undetected
UJ - Undetected, estimated limit
UL - Undetected limit biased low

Table 4-4
Detections In Monitoring Well Samples
Site 49 RI Report
NSWC - White Oak, Silver Spring, Maryland

Station ID	49GW206D		49GW206M	49GW206S
Sample ID	049GW206D9901	049GW206D001	049GW206M001	049GW206S0001
Sample Date	02/12/03	02/13/03	02/12/03	02/11/03
Notes	Duplicate			
Chemical Name				
Volatile Organic Compounds (UG/L)				
1,1,1-Trichloroethane	10 U	10 U	10 U	10 U
1,1-Dichloroethane	10 U	10 U	10 U	10 U
1,1-Dichloroethene	10 U	10 U	10 U	1.3 J
1,2-Dibromoethane	10 U	10 U	10 U	10 U
1,2-Dichloropropane	10 U	10 U	10 U	10 U
Acetone	40 B	43 B	7.2 B	10 U
Bromoform	10 U	10 U	10 U	10 U
Bromomethane	10 U	10 U	10 U	10 U
Chloroform	37	37	10 U	4.2 J
Cyclohexane	10 U	10 U	10 U	10 U
Methane	NA	NA	NA	NA
Methyl-tert-butyl ether (MTBE)	1.2 J	1.3 J	10 U	10 U
Styrene	10 U	10 U	10 U	10 U
Tetrachloroethene	10 U	10 U	10 U	1.1 J
Toluene	10 U	10 U	1.5 J	10 U
Trichloroethene	140	140	180	560
Vinyl chloride	10 U	10 U	10 U	10 U
cis-1,2-Dichloroethene	91	90	64	150
trans-1,2-Dichloroethene	2.9 J	3.1 J	10 U	10 U
Semivolatile Organic Compounds (UG/L)				
Acenaphthene	NA	NA	NA	NA
Dimethyl phthalate	NA	NA	NA	NA
Phenanthrene	NA	NA	NA	NA
Explosives (UG/L)				
No Detections				
Unfiltered Metals (UG/L)				
Aluminum	898	2,600	35,600	161 B
Arsenic	2.8 J	2.3 U	8.7 J	2.3 U
Barium	27.9 J	43 J	225	37.6 J

NA - Not analyzed
B - Blank contamination
J - Estimated
K - Biased high
L - Biased low

R - Unusable
U - Undetected
UJ - Undetected, estimated limit
UL - Undetected, limit biased low

Table 4-4
Detections In Monitoring Well Samples
Site 49 RI Report
NSWC - White Oak, Silver Spring, Maryland

Station ID	49GW206D		49GW206M	49GW206S
Sample ID	049GW206D9901	049GW206D001	049GW206M001	049GW206S0001
Sample Date	02/12/03	02/13/03	02/12/03	02/11/03
Notes	Duplicate			
Beryllium	0.1 U	0.1 U	1.9 J	0.1 U
Cadmium	0.3 U	0.3 U	0.3 U	0.3 U
Calcium	37,600 K	44,600	24,200 K	9,870
Chromium	39	62.6	339	16.7
Cobalt	2.5 B	3.2 J	42.5 J	3 J
Copper	22 J	45.5	166	3.9 B
Iron	1,420	4,080	72,400	2,630
Lead	6.2	12.2 L	15.2 L	4.7 L
Magnesium	7,920 K	8,880 K	19,600 K	4,710 J
Manganese	47.7	90.6	1,630	275
Nickel	26.5 J	40.7	278	21.2 J
Potassium	9,450	10,200	21,900	3,670 J
Selenium	4.8 J	4.1 J	1.6 U	1.6 U
Sodium	136,000 K	135,000 K	27,900 K	20,900 K
Vanadium	20.1 J	23.9 J	62.5	0.5 U
Zinc	26.6 B	127	185	24.1 B
Filtered Metals (UG/L)				
Aluminum	NA	105 B	6,800	30.8 B
Barium	NA	24.2 J	67.6 J	34 J
Beryllium	NA	0.1 U	0.25 B	0.1 U
Cadmium	NA	0.3 U	0.3 U	0.3 U
Calcium	NA	38,200	17,400 K	9,140
Chromium	NA	25.4	75.5	2.4 B
Cobalt	NA	0.5 U	10.6 J	2.2 B
Copper	NA	5.4 B	28.6	0.5 U
Iron	NA	500	14,100	1,810
Lead	NA	3 L	2.9 J	5.2 L
Magnesium	NA	8,000 K	10,200 K	4,360 J
Manganese	NA	38.1	898	216
Nickel	NA	13.1 J	81	17.1 J
Potassium	NA	9,650	11,300	3,240 J
Selenium	NA	5.3	1.6 U	1.6 U
Sodium	NA	132,000 K	21,400 K	19,400 K
Vanadium	NA	20.6 J	10 J	0.5 U

NA - Not analyzed
B - Blank contamination
J - Estimated
K - Biased high
L - Biase

R - Unusable
U - Undetected
UJ - Undetected, estimated limit
UL - Undetected. limit biased low

Table 4-4
Detections In Monitoring Well Samples
Site 49 RI Report
NSWC - White Oak, Silver Spring, Maryland

Station ID	49GW206D				49GW206M		49GW206S	
Sample ID	049GW206D9901		049GW206D001		049GW206M001		049GW206S0001	
Sample Date	02/12/03		02/13/03		02/12/03		02/11/03	
Notes	Duplicate							
Zinc	NA		28.1	B	44.8	B	17.8	B
Wet Chemistry (MG/L)								
Alkalinity	110		120		51		15	
Chloride	33		34		40		42	
Nitrate	0.1	U	0.1	U	0.1	U	0.38	L
Nitrogen	0.1	U	0.1	U	0.1	U	0.1	UL
Phosphorus	NA		NA		NA		NA	
Sulfate	250		230		18		15	

NA - Not analyzed
B - Blank contamination
J - Estimated
K - Biased high
L - Biased low

R - Unusable
U - Undetected
UJ - Undetected, estimated limit
UL - Undetected, limit biased low

Table 4-5
Detections In Borehole Water Samples During Packer Test
Site 49 RI Report
NSWC - White Oak, Silver Spring, Maryland

Station ID	49TW201DD			49TW206D			
Sample ID	049PT201DD4860	049PT201DD6780	049PT201DD8099	049PT206D7080	049PT206D9099	049PT206D110120	049PT206D130140
Sample Date	11/20/02	11/21/02	11/24/02	12/03/02	12/05/02	12/06/02	12/09/02
Depth of Sample (ft)	48-60	67-80	80-99	70-80	90-99	1-20	1-40
Notes							
Chemical Name							
Volatile Organic Compounds (UG/L)							
1,1-Dichloroethane	1.4	0.5 U	0.5 U	0.5 U	0.52	0.82	0.82
1,1-Dichloroethene	6.9	0.5 U	0.5 U	0.5 U	2.5	4.4	3.5
Acetone	7.4 B	5 U	8.9	2.6 B	5 U	5 U	5 B
Bromodichloromethane	2.6	0.29 J	0.28 J	0.66	0.5 U	0.5 U	0.5 U
Chloroform	38 J	6	8.2	4.6	0.5 U	0.5 U	0.5 U
Dibromochloromethane	0.82	0.5 U	0.5 U	0.5 U	0.5 U	0.5 U	0.5 U
Toluene	1.4	25	49	3.1	5.3	1.4	3.6
Trichloroethene	3,100	2.8	4.3	54	810	1,600	920
Vinyl chloride	3.1	0.5 U	0.5 U	0.5 U	1.7	2.7	2.1
cis-1,2-Dichloroethene	570	0.95	2.7	14	320	390	310
trans-1,2-Dichloroethene	30 J	0.5 U	0.5 U	0.35 J	4.4	27 J	16 J

NA - Not analyzed
B - Blank contamination
J - Estimated
U - Undetected

Table 4-5
Detections In Borehole Water Samples During Packer Test
Site 49 RI Report
NSWC - White Oak, Silver Spring, Maryland

Station ID				
Sample ID	049PT206D150160		049PT206D150199	
Sample Date	12/12/02		12/17/02	
Depth of Sample (ft)	1-60		1-60	
Notes			Duplicate	
Chemical Name				
Volatile Organic Compounds (UG/L)				
1,1-Dichloroethane	1.1		1.2	
1,1-Dichloroethene	4.7		5.4	
Acetone	5	U	5	U
Bromodichloromethane	0.5	U	0.5	U
Chloroform	0.5	U	0.5	U
Dibromochloromethane	0.5	U	0.5	U
Toluene	9.1		1.7	
Trichloroethene	1,900		1,600	
Vinyl chloride	3		3.3	
cis-1,2-Dichloroethene	490		520	
trans-1,2-Dichloroethene	23		22	

NA - Not analyzed
B - Blank contamination
J - Estim[illegible]
U - Unc[illegible]

Table 4-6
Detections In Paint Branch Surface Water Samples
Site 49 RI Report
NSWC - White Oak, Silver Spring, Maryland

Station ID	PBSW210	PBSW211		PBSW212	PBSW213
Sample ID	PBSW2100001	PBSW2119901	PBSW2110001	PBSW2120001	PBSW2130001
Sample Date	08/02/02	08/02/02	08/02/02	08/02/02	10/09/02
Chemical Name					
Volatile Organic Compounds (UG/L)					
No Detections					
Semivolatile Organic Compounds (UG/L)					
4-Chloro-3-methylphenol	3.9 K	11 U	10 U	11 U	NA
bis(2-Ethylhexyl)phthalate	1.4 J	2.5 J	1.4 J	11 U	NA
Explosives (UG/L)					
No Detections					
Unfiltered Metals (UG/L)					
Barium	28.6 J	30 J	29.8 J	29.6 J	NA
Calcium	14,300	14,500	14,800	14,500	NA
Iron	255	511	373	343	NA
Lead	1.5 UL	1.6 J	1.5 UL	1.5 UL	NA
Magnesium	4,020 J	4,020 J	4,090 J	4,040 J	NA
Manganese	25.4	76.9	60.9	48.2	NA
Nickel	1 U	4.1 J	1 J	1 U	NA
Potassium	2,930 J	2,970 J	3,100 J	2,950 J	NA
Sodium	12,400	12,500	12,900	12,500	NA
Filtered Metals (UG/L)					
Barium	27.3 J	27.9 J	28.1 J	28.3 J	NA
Calcium	14,000	14,600	14,300	13,900	NA
Iron	25.2 U	25.2 U	78.1 J	25.2 U	NA
Magnesium	3,930 J	4,080 J	3,970 J	3,880 J	NA
Manganese	25.3	48.4	50.2	33.9	NA
Potassium	2,860 J	2,990 J	2,990 J	2,890 J	NA
Sodium	12,000	12,600	12,500	12,200	NA
Vanadium	1.3 U	1.3 U	1.3 U	1.8 J	NA
Wet Chemistry (MG/L)					
Hardness	54	54	56	54	NA

NA - Not analyzed
B - Blank contamination
J - Estimated
K - Biased high
R - Unusable

U - Undetected
UJ - Undetected, estimated limit
UL - Undetected, limit biased low

File Path: v:\18gis\whiteoak\figures\site49_ri.apr

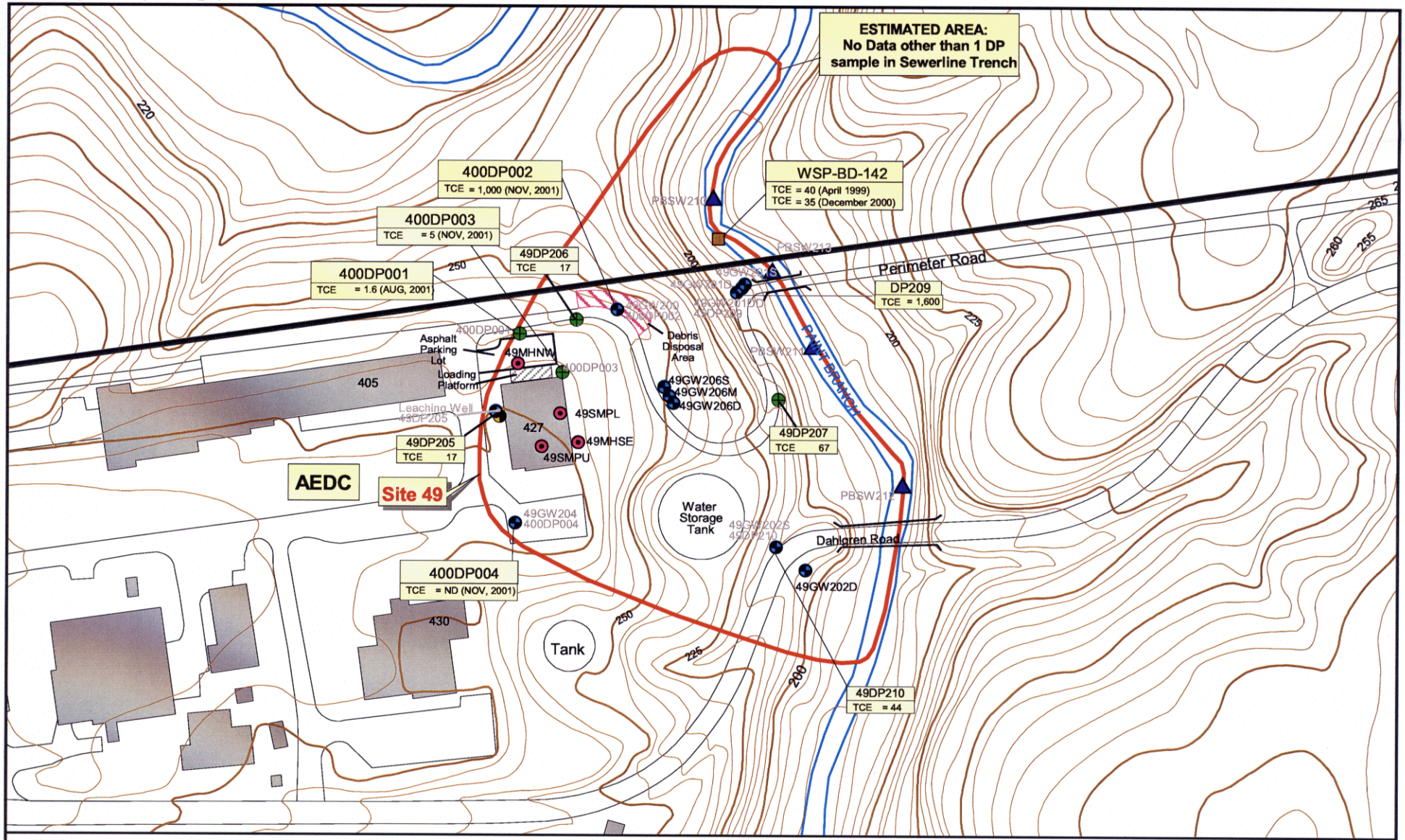

LEGEND

- Buildings (427=Building Number)
- Area Included in Site 49 RI
- Stream
- Base Boundary
- Topographic Contour Lines
- '250' (feet above mean sea level, 5 foot intervals)
- Monitoring Well Location
- Temporary Well Sample Location
- Leaching Well Location
- Surface Water Location
- Manhole/Sump Location

N

0 200 400 Feet

All Concentrations in ug/L

Figure 4-1
TCE in Shallow Groundwater - June 2002 (and prior)
Site 49 RI Report
NSWC - White Oak
Silver Spring, Maryland

CH2MHILL

File Path: v:\18gis\whiteoak\figures\site49_ri.apr

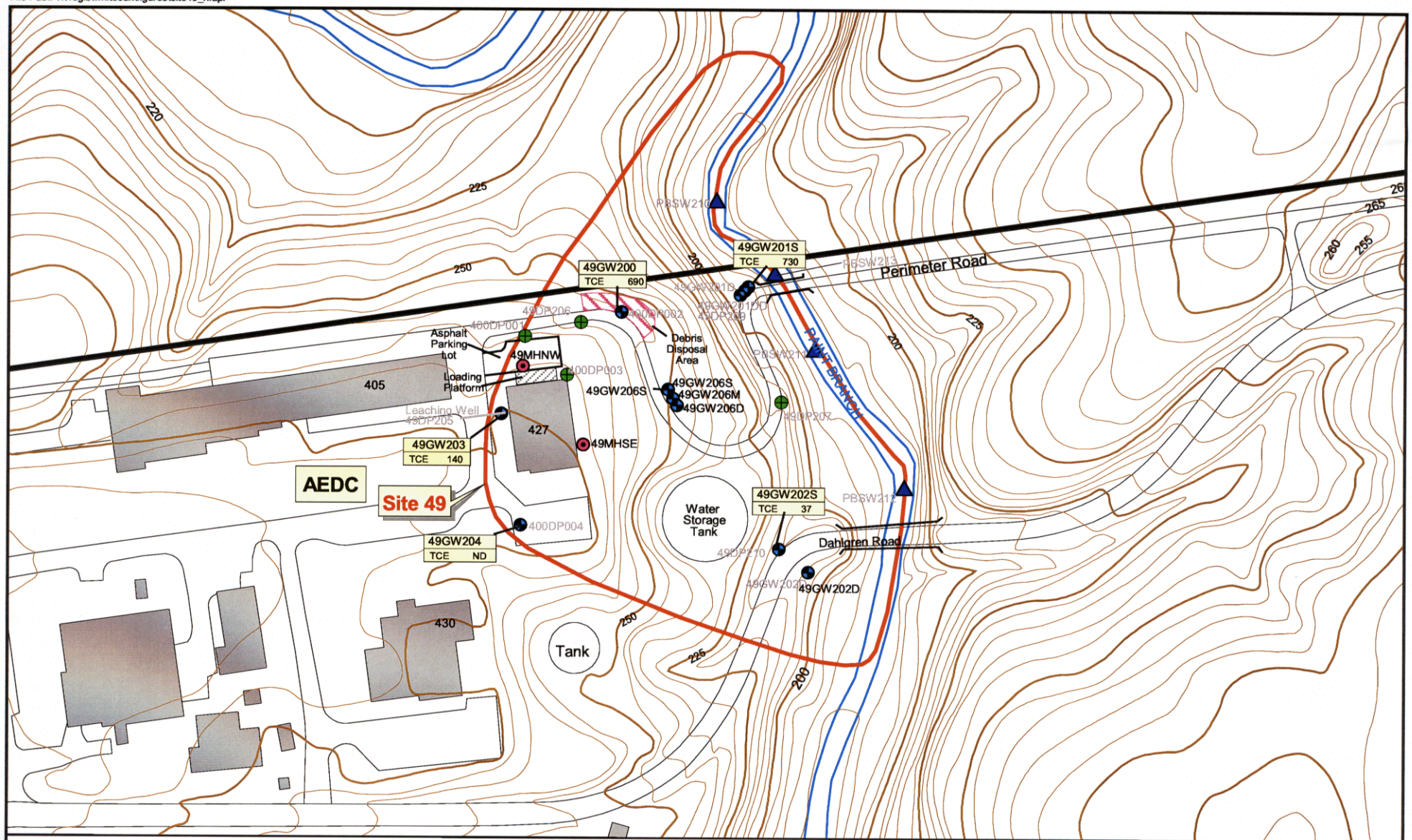

LEGEND

- Buildings (427=Building Number)
- Area Included in Site 49 RI
- Stream
- Base Boundary
- Topographic Contour Lines
- '250' (feet above mean sea level, 5 foot intervals)
- Monitoring Well Location
- Direct Push Sample Location
- Leaching Well Location
- Surface Water Sample Location
- Manhole Location

All Concentrations in ug/L
ND = Non-detect

N

0 200 400 Feet

Figure 4-2
TCE in Shallow Groundwater - August 2002
Site 49 RI Report
NSWC - White Oak
Silver Spring, Maryland

CH2MHILL

File Path: v:\18gis\whiteoak\figures\site49_ri.apr

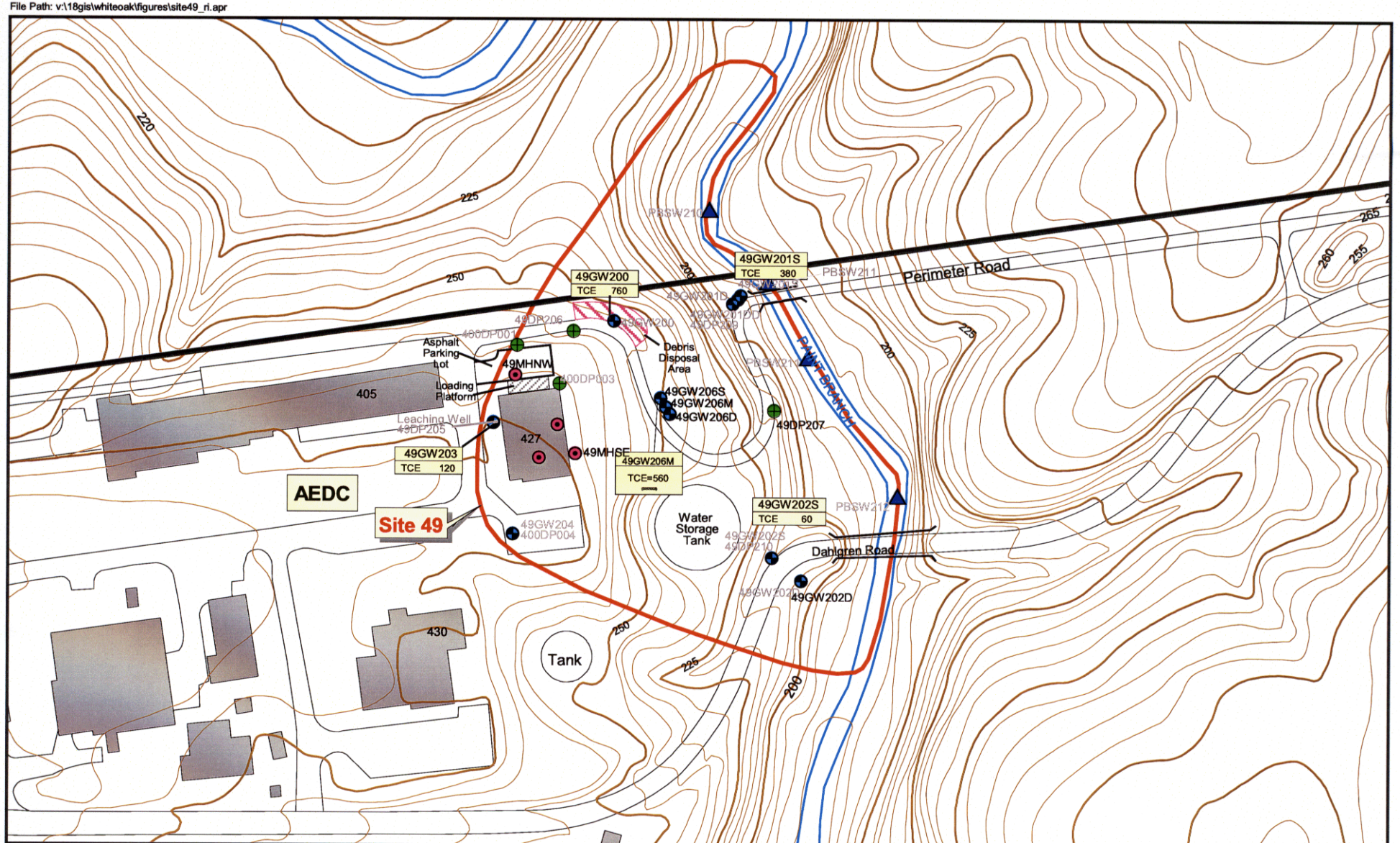

LEGEND

- Buildings (427=Building Number)
- Area Included in Site 49 RI
- Stream
- Base Boundary
- Topographic Contour Lines
- '250' (feet above mean sea level, 5 foot intervals)
- Monitoring Well Location
- Temporary Well Sample Location
- Leaching Well Location
- Surface Water Sample Location
- Manhole Location

All Concentrations in ug/L

N

0 200 400 Feet

Figure 4-3
TCE in Shallow Groundwater - October 2002
Site 49 RI Report
NSWC - White Oak
Silver Spring, Maryland

CH2MHILL

File Path: v:\18gis\whiteoak\figures\site49_ri.apr

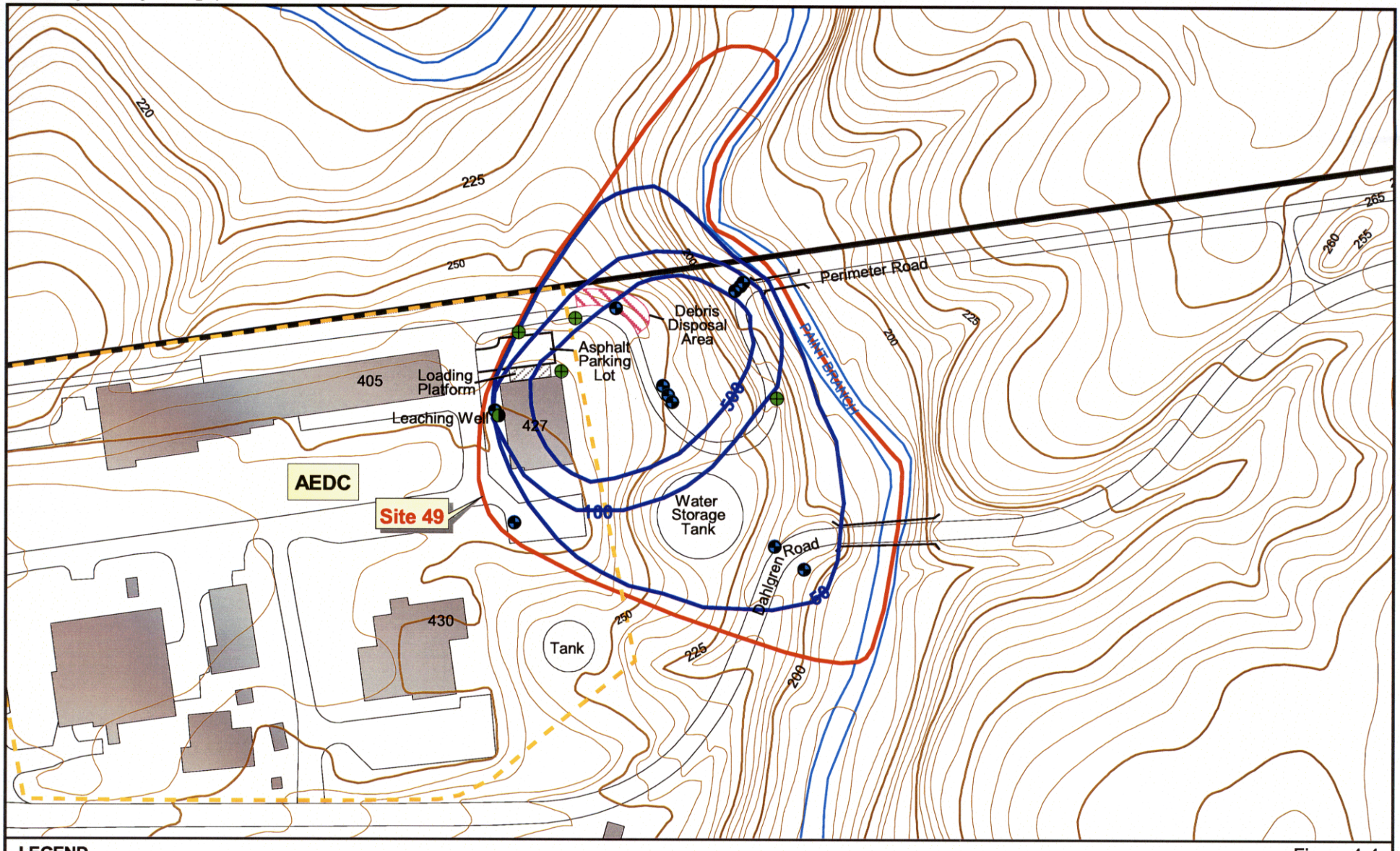

LEGEND

- Buildings (427=Building Number)
- Area Included in Site 49 RI
- AEDC Fence Line
- Stream
- Base Boundary
- TCE Concetrations in µg/L
- Monitoring Well Location
- Temporary Well Sample Location
- Topographic Contour Lines '250' (feet above mean sea level, 5 foot intervals)

N

0 200 400 Feet

Figure 4-4
Site 49 Conceptual Isoconcentrations for TCE in Shallow Groundwater
Site 49 RI Report
NSWC - White Oak
Silver Spring, Maryland

CH2MHILL

9208f031.dgn 11-MAY-2004

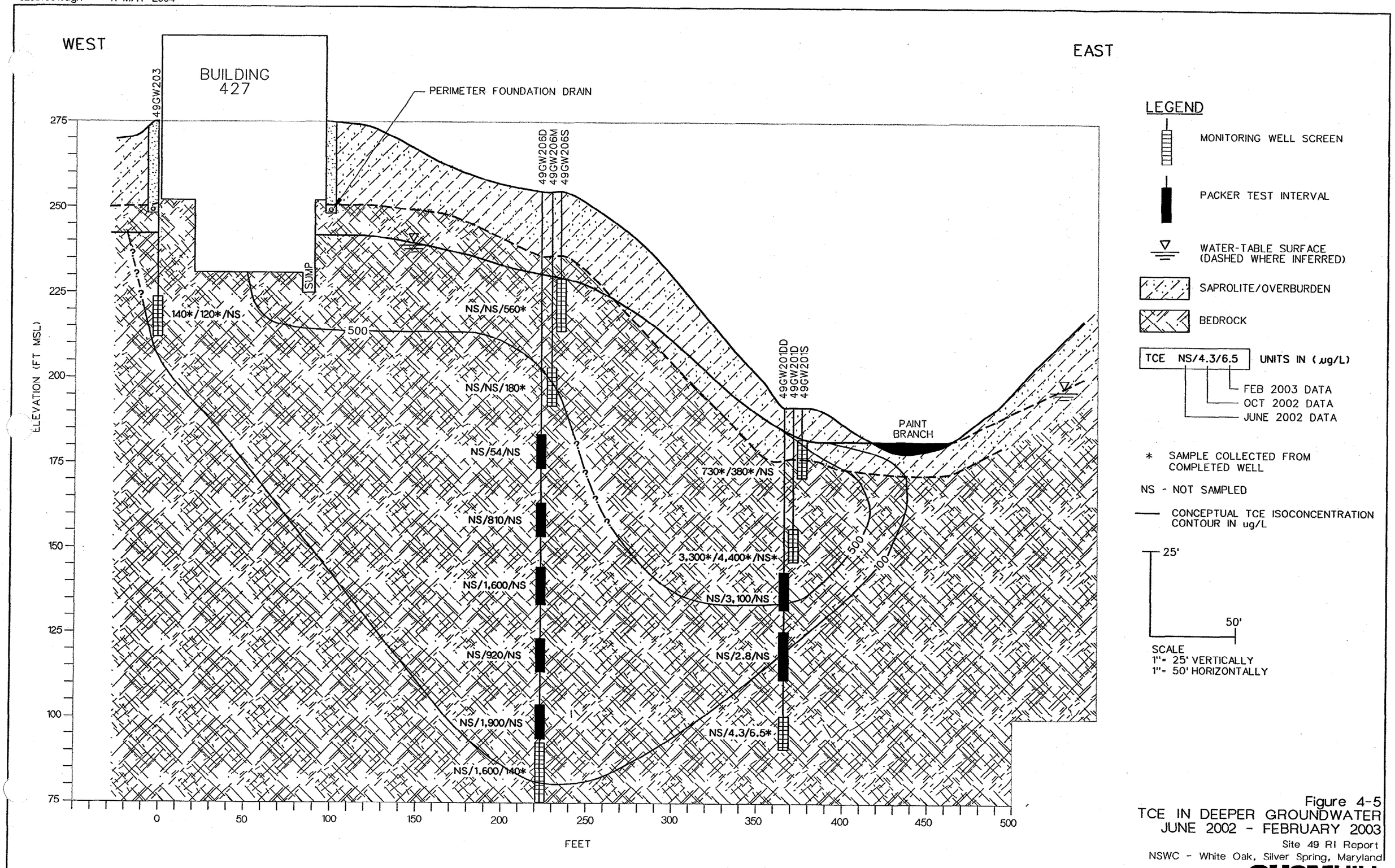

Figure 4-5
TCE IN DEEPER GROUNDWATER
JUNE 2002 - FEBRUARY 2003
Site 49 RI Report
NSWC - White Oak, Silver Spring, Maryland

CH2MHILL

00515A092

File Path: V:\18gis\Whiteoak\figures\site49_ri.apr

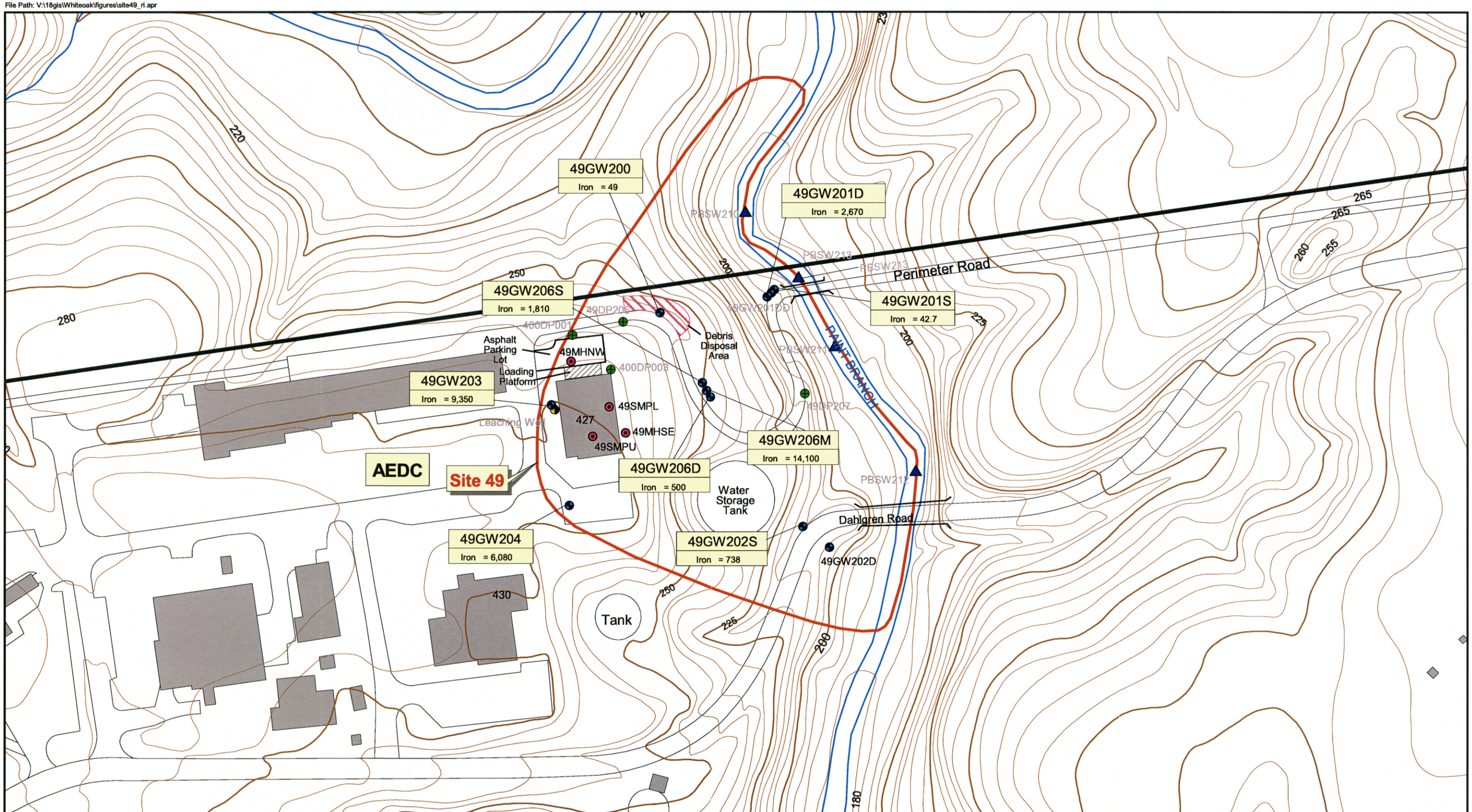

LEGEND

- Buildings (427=Building Number)
- Area Included in Site 49 RI
- Stream
- Base Boundary
- Monitoring Well Location
- Temporary Well Sample Location
- Leaching Well Location
- Surface Water Sample Location
- Manhole Location
- '250' Topographic Contour Lines (feet above mean sea level, 5 foot intervals)

Note: Most recent sample concentrations in µg/L

N

0 200 400 Feet

Figure 4-6
Iron in Groundwater
Site 49 RI Report
NSWC - White Oak
Silver Spring, Maryland

CH2MHILL

SECTION 5

Fate and Transport

This section provides a general discussion of the environmental fate and transport of the contaminants detected in groundwater at Site 49. This discussion is placed in the context of sources, release mechanisms, and environmental media affected by releases. Given these considerations, this section discuses the environmental processes that cause these contaminants to be transported in environmental media and that govern the fate of the contaminants.

This discussion includes the potential pathways to, and interactions with, surface water in Paint Branch. The fate and transport analyses are described herein to support the human-health risk assessment (presented in Chapter 6) and to aid in defining and evaluating remedial alternatives.

The fate and transport of contaminants in soil and surface water are not included in this section because of the paucity of detected chemicals, which results in minimal risks to human health (Section 6.0).

5.1 Site Contaminants and Their Properties

Many organic and inorganic constituents were detected in environmental media at Site 49. However, as discussed in Section 4, the only anthropogenic chemicals detected in groundwater at concentrations likely to impair groundwater quality are TCE, *cis*-DCE, and VC. Of these, TCE likely is the primary contaminant released. TCE was and continues to be a commonly used industrial cleaning and degreasing solvent, used for a wide variety of military and non-military purposes. TCE is a component of many proprietary product formulations. *Cis*-DCE and VC, while sometimes used as primary products, are much less commonly used in cleaning/degreasing applications. Accordingly, this section assumes that these chemicals were not released directly into the environment, but produced from TCE as a consequence of natural degradation processes discussed later in this section. This assumption is consistent with conceptual models of other sites at NSWC–White Oak and is supported by the ratios of contaminants detected in groundwater.

There appears to be one general source area at Site 49: Building 427. This is the only feature at Site 49 at which chemicals were likely to have been used. Releases from research, development, and testing operations and waste management practices at and around Building 427 are assumed to be the source of TCE. The topography of Site 49 away from Building 427 likely inhibited other operations. Because the specific purpose(s) for which TCE may have been used are unknown, the point(s) and mechanism(s) of release are not known. However, Building 427 and the adjacent leaching well and Debris Disposal Areas have been identified as potential source areas. It is unclear, however, based on soil sampling, the leaching well excavation, and the building inspection, where the actual release or releases have occurred. Likely scenarios for release include TCE disposal in the

leaching well, discharging TCE directly to the subsurface, from which it subsequently migrated to the water table.

TCE may have been released as a separate phase liquid or as an aqueous (dissolved or emulsion) phase from cleaning operations in and around Building 427 or disposal of TCE-contaminated material in the Debris Disposal Area. For the purpose of the fate and transport discussion, TCE releases are assumed to have been to the shallow subsurface soil (i.e., the unsaturated or vadose zone).

The occurrence, behavior, and fate of contaminants in the subsurface are often discussed in terms of partitioning, which is the ability of a contaminant to exist in and exchange between various environmental media. Depending on the physical and chemical characteristics of the chemical and the environmental media, a contaminant can exist:

- in a gas phase (soil gas),
- in an aqueous phase dissolved into water (pore water and groundwater),
- in a solid phase in which the contaminant sorbed or bound to the physical media by chemical forces (sorbed phase), and
- in a pure, separate, organic liquid phase (i.e., a non-aqueous phase liquid; NAPL).

A contaminant can move between these phases in response to various physical laws and concentration gradients. The sections 5.2 and 5.3 discuss, in both general and contaminant-specific terms, the behavior, transport, and fate of chemicals likely to have been released at Site 49. Theoretically, it is possible to predict the mass distribution and mass in each phase through calculations of fugacity; however, many assumptions must be made where data gaps exist, undermining the validity and reliability of any findings that result.

5.1.1 Physical-chemical Properties of TCE

The physical and chemical properties of TCE and other site-related chemicals are presented in Table 5-1. The dominant process for removing TCE from shallow soil and surface water is volatilization into the atmosphere, indicated by TCE's relatively high vapor pressure and K_h. Once in the atmosphere, TCE is degraded through reaction with hydroxyl radicals. TCE infrequently occurs in surface soil.

The K_{oc} value indicates that TCE has medium to high mobility through soil and will not partition significantly from water to soil. As it has been found to be highly mobile in soil, leaching from soil to groundwater is likely. As a result, it also is rarely found in subsurface soil.

TCE degrades most effectively under anaerobic conditions. Anaerobic degradation of the chlorinated aliphatics proceeds along a reductive dehalogenation pathway as presented in Figure 5-1.

The common degradation products of TCE behave somewhat differently from TCE because of lower K_{oc} and K_{ow} and higher volatility. Several of these degradation products were detected at the Site 49 sites, suggesting that processes are active that are reducing TCE concentrations.

TCE is a dense non-aqueous phase liquid (DNAPL) when present in undissolved form. Concentrations in groundwater over about 11 to 55 mg/L (1 to 5 percent of solubility) would suggest the presence of DNAPL in the subsurface.

The relatively low K_{ow} value indicates that TCE tends to remain in the aqueous phase and is not readily bioaccumulated.

5.1.2 Biodegradation of Chlorinated Hydrocarbons.

The biodegradation process uses soil organisms to degrade contaminants to innocuous byproducts such as carbon dioxide and water. Not all contaminants are biodegradable, and chlorinated solvents, such as those found within Site 49, are only completely degraded under special conditions. If these conditions are not met, or if one of the necessary requirements are limiting, the contaminant will not completely degrade.

Microorganisms exist in two states: dormant and active. In order to degrade contaminants the organisms need to be in the active state. For this to occur, there are four requirements: nutrients, moisture, an electron donor, and a terminal electron acceptor. Moisture and nutrients are generally readily available in the subsurface. Therefore, availability of electron donors or terminal electron acceptors are generally the limiting factors in biodegradation.

Three processes govern the biodegradation of chlorinated hydrocarbons. They are reductive dechlorination, oxidation, and co-metabolism. In general a chlorinated hydrocarbon contaminant must first be dechlorinated before complete degradation can occur. This process is called reductive dechlorination, where the contaminant acts as the terminal electron acceptor and hydrogen is the electron donor (Wiedemeier *et al*, 1999). The reduction of TCE and its daughter products to carbon dioxide, water, and chloride ions, the redox conditions necessary, and the relative speed of the reactions are shown in Figure 5-1.

Reductive dechlorination is the process where chlorine atoms are replaced by hydrogen atoms. This only occurs in anaerobic (dissolved oxygen concentrations less than 1 mg/L) conditions, and as each chlorine atom is removed, it becomes increasingly difficult to remove the next one. This is because TCE is more electronegative than *cis*-1,2-DCE (because it has more negatively charged chlorine atoms attached) and thus the process of reducing TCE to ethene slows down with each removal of a chlorine atom. Under anaerobic conditions, complete degradation of chlorinated compounds can only occur after all the chlorine atoms have been removed. Frequently only the first, or the first and second chlorine atoms are removed, resulting in the accumulation of daughter products, *cis*-1,2-DCE and vinyl chloride. The accumulation of vinyl chloride is of great concern to regulators as it is a known human carcinogen, is highly toxic even at low concentrations, and is more mobile than TCE and *cis*-1,2-DCE.

Reductive dechlorination, otherwise known as halorespiration, is performed by a group of organisms known as halorespirators. These organisms utilize hydrogen as the electron donor, the availability of which is frequently the limiting factor, and the chlorinated compound as the terminal electron acceptor. Halorespirators are the only organisms which conduct reductive dechlorination, but they are not the only organisms which utilize hydrogen. Halorespirators are most competitive for hydrogen when the redox conditions are low (between –150 and –320 millivolts; mV).

The following trends occur in environments undergoing reductive dechlorination through biodegradation and can be monitored to determine if natural attenuation is occurring:

- Reduction in parent concentrations (TCE)
- Increase in daughter product concentrations (TCE, DCE, vinyl chloride)
- Increase in ethene and ethane concentrations
- Elevated chloride concentrations
- Methane production
- Low redox conditions
- Production of iron (II)

Oxidation is the process where the contaminant is used as a carbon source and is broken down directly into carbon dioxide and water. TCE is not degradable via this process. There is limited evidence that *cis*-1,2-DCE is degradable, but vinyl chloride is rapidly degraded in circumstances where oxygen is available as the terminal electron acceptor.

Co-metabolism occurs under aerobic conditions (dissolved oxygen concentrations greater than 1 mg/L). The microorganisms utilize a carbon source other than the contaminant and as a byproduct of respiration the contaminant is fortuitously degraded. This occurs because cells are 'leaky', meaning that during the growth process some cellular components and products are released into the environment. For example, during the degradation of methane, an enzyme called methane monooxygenase (MMO) is produced. This enzyme adds an oxygen molecule to the methane. As the cell grows and divides, this enzyme is released into the environment, and will add an oxygen molecule to TCE, making it more amenable to degradation by other organisms. In the environment, co-metabolism will only occur when there is oxygen and another carbon source, such as petroleum hydrocarbons or methane, available. When either the oxygen or the carbon source is depleted, co-metabolism will cease (usually oxygen is depleted first). In engineered conditions, co-metabolism can be achieved by the addition of oxygen and a carbon source such as methane, ethane, propane, butane, toluene, or phenol. The addition of oxygen and ammonium (NH_4^+) has also been documented to support this process (Wiedemeier *et al*, 1999).

In summary there are three sets of conditions that may achieve the degradation of TCE to carbon dioxide, water, and chloride ions:

- Anaerobic conditions where the requirements for reductive dechlorination are met, followed by anaerobic degradation of vinyl chloride and ethene
- Anaerobic conditions where the requirements for reductive dechlorination are met, followed by aerobic conditions.
- Aerobic degradation via co-metabolism, which may require the addition of oxygen and a carbon source such as methane.

5.2 Contaminant Migration and Fate in the Vadose Zone

Once released into the vadose zone, TCE in a NAPL or aqueous phase will migrate downward in response to gravity. The rate and depth of penetration are a function of the volume of TCE released, the phase in which it was released, and the hydrogeologic

properties of the soil. If TCE was released as a NAPL, its density, viscosity, and interfacial tension cause it to penetrate more rapidly than would an equivalent volume of pure water. In addition, these properties allow the TCE to penetrate smaller pore spaces preferentially, compared to water.

TCE was not detected in any of the soil borings at significant concentrations, nor with significant frequency. Accordingly, a contemporary vadose zone source for the TCE contamination encountered in groundwater was not identified. However, the patterns of TCE detections in the Site 49 groundwater monitoring wells and groundwater flows paths indicate that the historic source(s) likely were in the area of Building 427. The construction of Building 427, with its extensive subsurface development and its perimeter drain/sump system (Which presumably would have lowered the water table to the level of the sump invert in the immediate vicinity of the building), suggests the possibility of releases near the bottom of the vadose zone and/or the top of the saturated zone.

While in the vadose zone, a portion of the TCE will become immobilized by capillary pressure, trapping a small fraction in the pore spaces of the soil matrix (residual NAPL). If a sufficient volume of TCE is released to continuously saturate the pore spaces throughout the vadose zone soil column, the NAPL may reach the water table. After the release has ceased, NAPL will continue to drain out of the vadose zone towards the groundwater surface under the influence of gravity until residual saturation due to capillary forces occurs. In addition, a portion of the NAPL will become adsorbed to organic carbon and immobilized. TCE has a moderately strong tendency to sorb to organic carbon.

Other processes attenuate the mass of NAPL in the vadose zone. Infiltrating pore water from precipitation recharge will dissolve a portion into the aqueous phase. This dissolution will act on all phases of the NAPL present in the vadose zone, including the residual NAPL and sorbed phases. Compared to other organic chemicals, TCE has a moderate solubility in water. TCE is a volatile organic chemical with a strong tendency to partition into the gas phase from all other phases. The mass transfer from the NAPL phase into the gas phase is governed by its vapor pressure, and from the dissolved to the gas phase by its Henry's Law Constant (HLC). TCE's moderately high vapor pressure and HLC indicate that TCE will partition into the gas phase readily. Table 5-1 summarizes these parameters and properties.

In summary, TCE released to the vadose zone will migrate downward to the groundwater surface, either in NAPL form (given sufficient volume) or in dissolved form. A portion will remain in the vadose zone trapped by capillary pressure and sorption to organic material, acting as a continuing source of dissolved phase contamination. Volatilization will reduce the amount in the residual and dissolved phases by mass transfer to soil gas.

5.3 Contaminant Migration and Fate in the Saturated Zone

Contaminants reach the saturated zone after having migrated through the vadose zone, unless the source of the release was below the groundwater surface. Given the extensive subsurface construction of Building 427 and the presence of the Leaching Well and interior sumps and drains, with inverts below the water table, a release below the water table is plausible.

At Site 49, the saturated zone is primarily the fractured bedrock hydrostratigraphic unit. Groundwater flow and contaminant transport in bedrock is controlled by the number, size (aperture), density, and "connectedness" of the fractures. These factors create a complex flow system that is simplified by treatment as an equivalent porous medium, i.e., that the fractures are sufficiently numerous and connected so that groundwater moves through the hydrostratigrpahic unit in the same manner as an unconsolidated, granular medium. Contaminants like TCE will flow with groundwater and will be affected by the same sets of physical and chemical processes, regardless of the medium, whether fractured bedrock, represented as an equivalent porous medium, or as a true porous medium. The rates at which these processes occur can differ, as can certain intrinsic characteristics of the medium, such as the presence of organic matter, which is expected to be considerably less in a bedrock environment compared to an unconsolidated unit. Bedrock aquifers also introduce new phenomena such as interactions with mineral surfaces, though these are not expected to be significant with organic chemicals like TCE.

Contaminant distribution, transport, and fate in the saturated zone are affected by the same general processes as in the vadose zone, as well as several others. If the NAPL reaches the groundwater surface as a separate phase liquid, its density determines where the immiscible liquid will pool: on top of the water table (i.e., a light NAPL; LNAPL) or penetrate below (i.e., a dense NAPL; DNAPL). The density of TCE is greater than that of water, so it will behave as a DNAPL when released as such and can penetrate below the groundwater surface. To do so, it must displace the groundwater occupying the pore spaces. TCE's low viscosity, interfacial tension, and tendency to be the wetting phase allow it to penetrate through the aquifer more rapidly than groundwater, to infiltrate into smaller pore spaces, and to displace pore water readily. The DNAPL TCE will migrate downward through the saturated water column until residual saturation is reached or a lower permeability medium is encountered that retards or slows downward movement. TCE's lower viscosity, however, will allow it to enter and penetrate lower permeability units more readily than groundwater. A relatively small fraction will also sorb to organic material in the saturated zone. These residual and sorbed phases will act as a continuing source of dissolved phase contamination.

The presence of DNAPL is a key factor in assessing remedial options for TCE-contaminated groundwater. While the presence of true DNAPL (i.e., a separate-phase liquid) or residual saturation (immobile DNAPL) can be detected with certain field techniques such as hydrophobic, reactive dye tests or ultraviolet fluorescence, one must locate DNAPL first, making these technique more of a confirmatory process rather than a primary investigative tool. The presence of DNAPL is more commonly inferred by comparing dissolved phase concentrations to effective solubility limits or by comparing soil concentrations to saturation values (C_{sat}; i.e., all environmental media – soil gas, water, and organic carbon -- are saturated with the chemical in accordance with its partitioning laws and constants). TCE was not detected in soil at concentrations greater than laboratory reporting limits; PCE was detected at part-per-billion (ppb) concentrations, well below any saturation values[5] based on the TOC concentrations between 840 and 15,000 mg/kg. Accordingly, there is no analytical evidence to indicate the potential presence of DNAPL. A commonly-accepted "rule-of-thumb" indicating that DNAPL may be present is dissolved concentrations greater

[5] Saturation values are calculated soil concentrations that, based on partitioning theory, indicate that all environmental media in which the chemical can reside (i.e., groundwater, sorbed, and gaseous phases) are saturated to their respective capacities.

than 1 to 5 percent[6] of the solubility limit (USEPA, 1994). Since no other organic constituents phases other than TCE are present, the effective solubility should approximate the solubility of TCE in pure water - which is approximately 1,100 mg/L at environmental temperatures. Therefore, TCE concentrations in groundwater greater than 11,000 μg/L could indicate the presence of DNAPL. The maximum concentrations detected was 4,400 μg/L, or 0.4 percent of the pure solubility. Therefore, soil and groundwater quality data suggest that DNAPL is not present in significant quantities, if at all.

Dissolution will transfer TCE mass from the mobile and residually saturated DNAPL phases to the aqueous dissolved phase, contaminating groundwater. Dissolution is also affected by the presence of multiple chemicals (exhibiting phenomena such as cosolvency and effective solubility), though this appears to be insignificant at Site 49.

The aqueous-phase contaminants will move by advective transport with groundwater, in which the plume of contaminated groundwater moves in response to hydraulic gradients. The rate of groundwater movement is governed by Darcy's Law and is proportional to the hydraulic gradient and conductivity and inversely proportional to the effective porosity of the medium through which it is moving. Contaminant plume migration will be retarded by the presence or organic carbon in the saturated zone, slowing the plume movement relative to uncontaminated groundwater movement. At Site 49, the geologic media of the bedrock and saprolite contain little organic carbon, so retardation is considered negligible at this site.

Advective transport is supplemented by dispersive and diffusive processes. Dispersion is a hydrodynamic process in which individual molecules of contaminated groundwater become deflected in three dimensions from the main axis of flow as they encounter tortuous flow paths through individual pores in the aquifer. The net effect is that the plume front expands to a certain degree relative to the original plume front as it disperses through the aquifer. This phenomenon is aquifer-specific and results in net reductions in concentration due to dilution. Diffusion occurs as individual molecules of the contaminant migrate from areas of high concentrations to areas of low concentrations in response to concentration gradients. This phenomenon is negligible compared to the scale of advective and dispersive processes, however, except in aquifers that have low permeability and/or slow rates of movement (i.e., very low hydraulic gradients). Groundwater movement can also be affected by density-driven convection, although this is negligible with plumes of organic chemicals given their relatively low solubilities.

Contaminant mass in the dissolved phase can also be affected by abiotic and biological degradation processes. These processes destroy the contaminant (as opposed to mass transfer like volatilization, dissolution, or sorption) and produce reaction products, which themselves can be contaminants or innocuous products. Figure 5-1 summarizes the abiotic and biological degradation pathways and reaction products associated with the chlorinated ethylenes detected at Site 49. Abiotic processes (generally elimination/substitution reactions that include hydrolysis, hydrogenolysis, dihaloelimination, and dehydrohalogenation) are inapplicable to or are very slow for TCE and its degradation products, and thus are not significant environmental processes.

[6] Some practitioners use a value of 10 percent of the solubility limit. USEPA guidance recommends the more conservative 1 percent as a screening level.

Biodegradation, however, can occur rapidly (i.e., at environmentally significant rates) in the aqueous phase, producing degradation products. Each chemical biodegrades under different environmental conditions, in part because the chemical reactions that destroy the individual chemicals have different free energies and in part because each reaction has different geochemical requirements in the subsurface. Biodegradation is built on a pyramid of requirements that include: a suitable microbial consortium, an energy source (electron donor), an electron acceptor, appropriate levels of moisture, appropriate pH and temperature, nutrients, an absence of toxicity, an ability to remove metabolites, and the absence of significant competition. Biodegradation occurs by three chemical pathways:

- Contaminant as electron acceptor;
- Contaminant as electron donor; and
- Cometabolism.

The pathway in which the chemical serves as the electron acceptor in a redox reaction is generally the most effective (i.e., most common and fastest) degradation mechanism for chlorinated solvents, at least in natural (i.e., non-engineered) scenarios. This pathway is often referred as reductive dechlorination and occurs under anaerobic, reducing conditions. The second pathway, in which the chemical serves as the electronic donor, occurs under aerobic, oxidizing conditions. These first and second pathways are chemical reactions that involve life functions for microorganisms and are often referred as cellular respiration or as metabolism. The third pathway, cometabolism, is a fortuitous reaction in which the microbial population does not directly utilize the chemicals, but secretes enzymes that react with and degrade the chemicals.

Reductive dechlorination occurs when an electron is transferred from an electron donor to the chemical. Reductive dechlorination proceeds in a step-wise series of reactions, in which each step involves the transfer of one electron from donor to acceptor, and the substitution of a hydrogen atom for a chlorine atom on the chemical. Thus, a 3-chlorine compound such as TCE becomes a 2-chlorine compound such as DCE, and so on to complete elimination of chlorine from the chemical. In general, the more highly oxidized chemicals (e.g., PCE, TCE) are the most amenable to reductive dechlorination. For example, TCE is degraded exclusively under anaerobic, reducing conditions, through the reductive dechlorination process. Ground water conditions are considered anaerobic and reducing when dissolved oxygen (DO) concentrations are below approximately 0.5 mg/L; reducing conditions are present when the oxidation-reduction potential (ORP or, alternatively, Eh) is less than 50 millivolts (mV). Strongly reducing conditions occur at –100 mV and below. TCE biodegrades through reductive dechlorination to DCE. There are three possible isomers for DCE (*cis*-1,2-DCE, *trans*-1,2-DCE, and 1,1-DCE); however, biologically-mediated reductive dechlorination of TCE generally produces *cis*-1,2-DCE. Ratios of *cis*-DCE to *trans*-DCE resulting from TCE reduction in groundwater are reported to be 25:1 to 30:1; ratios of *trans*-DCE to 1,1-DCE are approximately 4:1 (i.e., approximately 95 percent of DCE produced by degradation of TCE is of the *cis* isomer). Some biodegradation of TCE through cometabolism via epoxidation (an aerobic pathway) has been reported, but requires geochemical conditions not encountered at Site 49.

Cis-DCE biodegrades under aerobic and anaerobic conditions, through the reductive and oxidative pathways, to VC. In addition, *cis*-DCE can also abiotically degrade to chloroethane.

It should also be noted that *cis*-DCE is more easily biodegraded than *trans*-DCE, because the *trans* isomer degradation is inhibited by stearic hindrance, because the Cl- atoms are located on diametrically opposite sides of the double bond, it is "harder" for the microorganisms and enzymes to get full contact.

VC biodegrades to ethylene under reducing conditions, but at a relatively slow rate. Because, under reducing conditions, the rate of VC degradation is less than that of the more highly chlorinated ethylenes, VC may appear to accumulate in groundwater. VC is directly oxidized to carbon dioxide fairly rapidly, however, under aerobic conditions. VC is degraded most effectively under conditions in which the VC serves as the electron donor, which is an oxidation pathway (second pathway). Since this is an oxidation reaction, only the least oxidized chemicals like VC undergo degradation through this pathway. More highly oxidized (i.e., more chlorinated) chemicals can be degraded under generally aerobic conditions, but this has been attributed to anaerobic micro-environments within the aerobic area that cause locally reducing conditions.

In electron-donating biodegradation, the chemicals are destroyed (mineralized) through oxidation, forming CO2, formate, and other chemicals.

Cometabolism occurs when microorganisms use compounds other than contaminants in their metabolic redox reactions. In the course of these reactions, enzymes are secreted that chemically oxidize chemicals. For example, some microorganisms secrete methane-, toluene-, or ammonia- monooxygenase (MO) during metabolism. MMO is an enzyme that reacts with TCE to form an epoxide, which is relatively unstable and readily degrades to chloracetates and chloraldehydes. Cometabolism occurs under aerobic conditions, but also produces toxic metabolites that can be harmful to the microorganism, creating a potentially self-limiting process. As noted above, cometabolism has the potential to degrade the TCE, but the conditions required are not likely to exist at Site 49.

Volatilization also attenuates TCE, *cis*-DCE, and VC concentrations through mass transfer to soil gas phase in accordance with each contaminant's HLC. *Cis*-DCE and VC also partition to organic carbon in the aquifer, and travel by the same advective, dispersive, and diffusive processes discussed above. However, these chemicals are assumed to be degradation products of aqueous phase TCE and, if so, cannot exist in the NAPL phase. Their dissolved-phase concentrations are useful in understanding past TCE concentrations, since the degradation product concentrations are directly related to TCE concentrations by molar ratios. It should be noted that as TCE degrades biologically, the loss of the chlorine atom causes equivalent molar values to have lower mass/volume concentrations. Based on molar ratios, the complete degradation of TCE at 100 μg/L produces 74 μg/L of *cis*-DCE, which in turn produces 47 μg/L of VC.

The physical/chemical parameters specific to TCE, *cis*-DCE, VC, and various inorganic contaminants detected at Site 49 are tabulated in Table 5-1.

5.4 Conceptual Model of Contaminant Transport

Chapter 3 described the model of groundwater flow at the site. In summary, groundwater originating in the area surrounding Building 427, travels east-northeast towards and discharges to Paint Branch. Flow occurs exclusively in the bedrock at higher elevations (in

the upgradient-most portions of the plume) and in both the bedrock and saprolite at lower elevations near Paint Branch. Groundwater flows toward Paint Branch, contributing to base flow, based on the hydraulic gradients that follow the steep topography, as well as the perennial nature of Paint Branch. Although Paint Branch may not capture all groundwater flow, the similar gradients on the east side of Paint Branch preclude groundwater flow past Paint Branch. Groundwater flow in deeper horizons may refract south, as indicated by the hydraulic head data and detected TCE concentrations in well 49GW202D.

Monitoring well 49GW204, located south of Building 427, is the background monitoring well at Site 49. The well is located approximately 150 feet east (cross-gradient) of the former leaching well. The samples collected from 49GW204 during initial round of groundwater sample did not contain detectable concentrations of VOCs, SVOCs, or explosives.

One presumed source of VOCs (the leaching well) has been removed and, as discussed above, a remaining soil source is not likely. Adverse effects to groundwater remain evident near Building 427; however, the highest concentrations are observed near Paint Branch (49GW201S and 49GW201D). This suggests that although contaminant mass is distributed areally throughout Site 49 and vertically in the bedrock, much of the mass has migrated towards Paint Branch. Further, although an estimate of the initial mass is not possible, it is likely that much has already discharged to the stream, where the turbulent nature and ambient conditions cause the VOCs to volatilize. No impairment of water quality in Paint Branch has been observed, indicating that the mass loading to Paint Branch from Site 49 groundwater is small relative to the overall water balance and attenuates rapidly.

5.5 Summary of Fate and Transport Conclusions

The following conclusions regarding the fate and transport of contaminants at Site 49:

- Several potential source areas have been identified in the vicinity of Building 427, including the former leaching well, the Debris Disposal area, and the perimeter drain system. Data collected during this investigation identified TCE and its degradation products at concentrations in the thousands of micrograms per liter in groundwater. This information, along with water-level data, confirms that TCE contamination originating from the presumed source area is migrating easterly, towards and discharging to Paint Branch.

- It appears that a significant volume of contaminant mass has migrated from Building 427 to Paint Branch. The portion this volume represents relative to the total volume, is unknown because the initial mass is unknown. Further, the complexity of the flow system decreases the uniformity of the plume and limits the characterization process.

- Natural attenuation likely is occurring at Site 49 based on the presence of degradation products; however, the lines of evidence needed to justify that natural attenuation is occurring at a rate that will result in the ultimate remediation of the site have not been observed.

TABLE 5-1
Physical, Chemical, and Half-Life Data of Representative Chemicals
Site 49 RI Report
NSWC-White Oak
Silver Spring, Maryland

CHEMICAL	Molecular Weight	Specific Gravity	Water Solubility	Vapor Pressure	Henry's Law Constant	Log K_{oc}	K_d	R	Half-Life Range (days)					
									Soil		Groundwater		Surface Water	
	(g/mole)	(unitless)	(mg/l)	(mm Hg)	(atm-m^3/mole)	(ml/g)	(ml/g)	(unitless)	Low	High	Low	High	Low	High
VOCs														
Trichloroethene	131.39	1.464	1100	57.8	9.1×10^{-3}	2.11	1.6×10^{-1}	2.18	182	365	321	1643	182	365
cis-1,2-Dichloroethene	96.94	1.284	800	202	4.1×10^{-3}	1.55	4.3×10^{-2}	1.31	28	182	56	2850	28	182
Vinyl chloride	62.50	0.911	1100	2580	2.78×10^{-2}	1.26	2.2×10^{-2}	1.16	28	182	56	2850	28	182
Metals														
Aluminum	NU	NU	NU	NU	NU	NA	NA	NA	NR	NR	NR	NR	NR	NR
Arsenic	NU	NU	NU	NU	NU	NA	3.3[a]	25	NR	NR	NR	NR	NR	NR
Cadmium	NU	NU	NU	NU	NU	NA	6.7[a]	51	NR	NR	NR	NR	NR	NR
Iron	NU	NU	NU	NU	NU	NA	55[a]	408	NR	NR	NR	NR	NR	NR
Manganese	NU	NU	NU	NU	NU	NA	150[a]	1111	NR	NR	NR	NR	NR	NR
Mercury	NU	NU	NU	NU	NU	NA	NA	NA	NR	NR	NR	NR	NR	NR
Vanadium	NU	NU	NU	NU	NU	NA	NA	NA	NR	NR	NR	NR	NR	NR

Notes

K_{oc} = Organic carbon partition coefficient

f_{oc} = fraction organic carbon in soil (1.21×10^{-3})

$\rho = 1.85$ g/cm^3 (bulk density of soil)

$n_e = 0.25$ (bulk porosity of soil)

$K_d = K_{oc} * f_{oc}$ (water - soil partition coefficient, for orga

$R = 1 + \rho * K_d/n_e$ (retardation coefficient for groundwater transport)

NA = Not available

NR = Not relevant for the indicated organic

NU = Not Known; form of inorganic is not identified

Specific gravity, solubility, and vapor pressure are at 20°C, if available, or nearest temperature

[a] Mean K_d values from Dragun, J.

Data sources:

Montgomery and Welkom, 1989, *Groundwater Chemicals Desk Reference,* Volume 1

U.S. Department of Health and Human Services (ATSDR), 1993, *Toxicological Profile for RDX (Draft)*

U.S. EPA Office of Drinking Water, 1989, *Trinitrotoluene Health Advisory*

Half-lives from Howard, Ph. H. et al, 1991, *Handbook of Environmental Degradation Rates* and from *ATSDR, 1993*

Dragun, James. *The Soil Chemistry of Hazardous Materials*

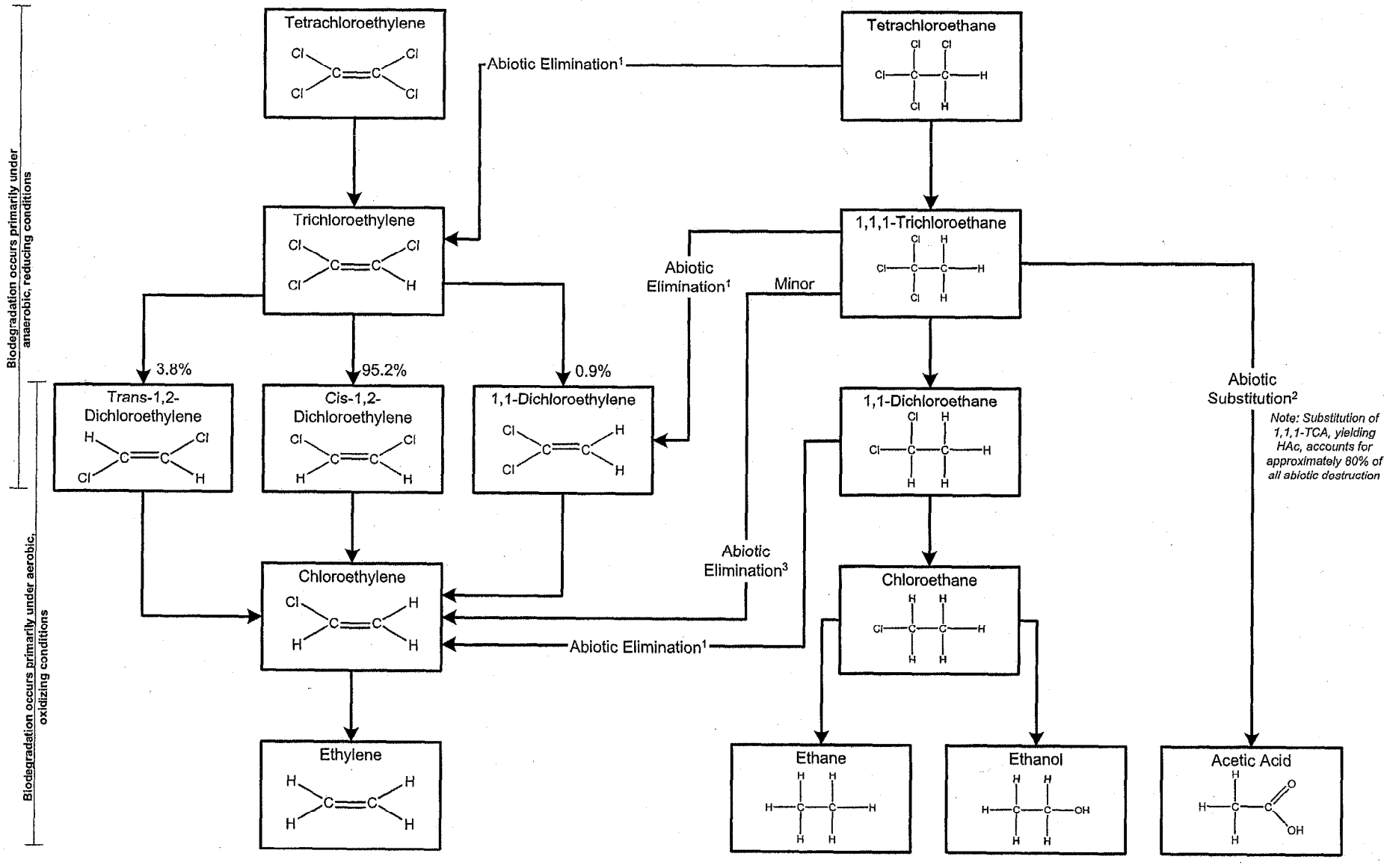

All Pathways are biological degradation, unless otherwise noted.
[1] Also known as: Dehydrohalogenation
[2] Also known as: Hydrolysis
[3] Also known as: Dihaloelimination

Figure 5-1
Environmental Fate of Chlorinated Solvents

SECTION 6

Baseline Human-Health Risk Assessment

6.1 Introduction

This section presents the results of an assessment of potential human health risks associated with the presence of site-related groundwater and surface water contaminants at Site 49.

Soil was not evaluated in the risk assessment because Site 49 was initially identified as a groundwater contamination site (i.e. not as a disposal site related to known practices) and during subsequent sampling as part of this RI, none of the contaminants of potential concern (COPC) in groundwater could be found in the soil and no discernable area of waste disposal has been identified in the soil at the site (based on site data and historic records searches) that can be attributed as the source of the VOCs found in groundwater. With the concurrence of the BRAC Cleanup Team (BCT) for NSWC White Oak, potential risks associated with naturally occurring and anthropogenic compounds (metals and trace organic compounds) found in the soil samples that were collected were not quantified.

This baseline risk assessment was conducted to assess the potential human health affects from groundwater and surface water at the site under current conditions, as well as to determine if any further actions are needed at the site to be sufficiently protective of human health. This risk assessment has been prepared using conservative assumptions. All feasible exposure pathways for groundwater and surface water have been considered based on current site conditions and potential future site usage. The risk assessment incorporates the general methodology described in *Risk Assessment Guidance for Superfund (RAGS), Volume 1, Human Health Evaluation Manual, Part A* (USEPA, December 1989), *Risk Assessment Guidance for Superfund, Volume 1, Human Health Evaluation Manual, Part D* (USEPA, December 2001), and USEPA Region III Technical Guidance Manuals for Risk Assessment.

The results of the Site 49 baseline human health risk assessment will be used to document the potential for endangerment to human health and to provide a basis on which to select action levels, as necessary.

The human health risk assessment for Site 49 comprises the following components:

- **Identification of Chemicals of Potential Concern (COPCs)** - identifies and characterizes the distribution of COPCs found on the site. Chemicals identified in this screening are the focus of the subsequent evaluation in the risk assessment.
- **Exposure Assessment** - identifies potential pathways by which exposure could occur, characterizes the potentially exposed populations (e.g., industrial workers) and estimates the magnitude, frequency, and duration of exposures.
- **Toxicity Assessment** - identifies the types of adverse health effects associated with exposure to COPCs and lists available toxicity factors (e.g., cancer slope factors and reference dose values) for the COPCs.

- **Risk Characterization** - integrates the results of the exposure assessment and toxicity assessment to estimate the potential risks to human health.
- **Uncertainty Assessment** - identifies sources of uncertainty associated with the data, methodology, and the values used in the risk assessment estimation.

These components are described briefly in the following sections. Spreadsheets prepared in accordance with USEPA RAGS Part D (USEPA, December 2001) were used to screen for COPCs, and to calculate estimated exposures and health risks associated with the COPCs. These spreadsheets are presented in Appendix H.

6.2 Identification of Chemicals of Potential Concern

The identification of COPCs includes data collection, data evaluation, and data screening steps. The data collection and evaluation steps involve gathering and reviewing the available site data and identifying a set of data that is of acceptable quality for the risk assessment. This data set is then further screened against concentrations that are protective of human health to reduce the data set to those chemicals and media of potential concern. The data used for the quantitative risk analysis met the Data Quality Objectives (DQOs).

6.2.1 Data Evaluation and Selection

Field investigations conducted at Site 49 were intended to address the nature and extent of groundwater contamination beneath the site. Surface water was evaluated to quantify the affects, if any, contaminated groundwater originating from Site 49 may have on Paint Branch. Detailed results of the Site 49 groundwater and surface water sampling are presented in Section 4. Table 6-1 summarizes the samples that were used to estimate potential exposures and risks associated with groundwater and surface water at Site 49.

A review of the data and discussions with USEPA, MDE, and the Navy identified the following criteria for data usability:

- Estimated values flagged with a J qualifier were treated as unqualified detected concentrations.
- Data qualified with an R (rejected) were not used in the risk assessment and were not included in the total count of samples analyzed for a constituent.
- Data qualified with a B (blank contamination) were used in the risk assessment as if they were non-detects, with the blank-related concentrations of each constituent used as the sample quantitation limit. One-half of the blank-related concentrations were used to calculate exposure point concentrations in the risk assessment.
- One-half of the sample quantitation limit (SQL) or sample detection limit (DL) were used in the risk assessment for cases where no detectable contaminant quantities were found in that sample, but the contaminant was detected in that medium at the site.
- For duplicate samples, the higher of the two concentrations was used as the sample concentration.

6.2.2 Data Summary

Data collected during the RI from August 2002 through February 2003 were used in the risk assessment. All of the data used in the risk assessment have been fully validated and are assumed to represent current conditions. For both media (groundwater and surface water), chemical-specific summary statistics are presented in Appendix H for the data sets used for risk calculations.

6.2.2.1 Groundwater

Groundwater data used in the risk assessment were collected by CH2M HILL from August 2002 through February 2003. The sampling locations are shown in Figure 2-1. The samples collected in August 2002 were analyzed for TCL VOCs, SVOCs, explosives, and TAL total and dissolved metals. Samples collected in October 2002 were analyzed for TCL VOCs only, and samples collected in February 2003 were analyzed for TCL VOCs and TAL total and dissolved metals. The groundwater sampling results are discussed in Section 4. Table 6-1 lists the groundwater samples included in the risk assessment. A statistical summary of constituents detected in the groundwater is presented in Appendix H.

6.2.2.2 Surface Water

Three surface water samples were collected in August 2002 from Paint Branch. These samples were analyzed for TCL VOCs, SVOCs, explosives, and TAL total and dissolved metals. An additional surface water sample was collected in October 2002 and analyzed for TCL VOCs only. The results of the sampling activities are discussed in Section 4. Table 6-1 lists the surface water samples evaluated in the risk assessment. A statistical summary of constituents detected in the surface water is presented in Appendix H.

6.2.3 Selection of Chemicals of Potential Concern (COPCs)

All of the detected chemicals were screened in accordance with USEPA Region III guidelines (USEPA, January 1993), using the steps described below. The COPC selection process was conservative to ensure selection of the constituents presenting the majority of potential risk associated with the site. The maximum detected concentration of each constituent in each medium was compared to a screening value (the USEPA Region III Risk-Based Concentration [RBC], for the majority of the constituents) to select the COPCs for the media. USEPA Region III RBCs (USEPA, April 2004) based on non-carcinogenic effects were divided by ten to account for exposure to multiple constituents. RBCs based on carcinogenic effects were used as presented in the RBC Table (USEPA, April 2004). If the maximum concentration of a constituent exceeded the screening value, the constituent was selected as a COPC and retained for the risk evaluation.

- **Comparison with Health-based Criteria for Groundwater:** The maximum detected chemical concentrations in groundwater were compared with USEPA Region III tap water RBCs (USEPA, April 2004). Constituents with maximum detected concentrations below the RBC were not retained as COPCs. Lead concentrations in groundwater were compared with the Safe Drinking Water Act action level of 15 ppb.

- **Comparison with Health-based Criteria for Surface Water:** The maximum detected chemical concentrations in surface water were compared with ten times the USEPA

Region III tap water RBCs (USEPA, April 2004). Constituents with maximum detected concentrations below the RBC were not retained as COPCs. Lead concentrations in surface water were compared with the Safe Drinking Water Act action level of 15 ppb.

- **Comparison with Recommended Dietary Allowances (RDAs):** Chemicals that are human nutrients, present at low concentrations (i.e., only slightly greater than naturally occurring levels), and toxic only at very high doses were eliminated from the quantitative risk analysis. These constituents are calcium, magnesium, potassium, and sodium. Table 6-2 shows the comparison of the human nutrients to the RDAs.

6.2.4 Chemicals of Potential Concern

Table 6-3 identifies the chemicals that were selected as COPCs based on the above screening methodology for groundwater and surface water. There were no constituents retained as COPCs for surface water. For bedrock groundwater, a number of VOCs and metals were retained as COPCs for quantitative risk analysis. A summary of the COPC screening for each media is shown in Appendix H, Tables 2.1 through 2.3.

6.3 Exposure Assessment

Exposure refers to the potential contact of an individual with a chemical. The exposure assessment identifies pathways and routes by which an individual may be exposed to the COPCs and estimates the magnitude, frequency, and duration of potential exposure. Contaminant fate and transport is evaluated in Section 5. A conceptual exposure model showing potential exposure scenarios identified under current and potential future conditions is presented in Figure 6-1. The following subsections discuss the three components of exposure assessment:

- Characterization of exposure setting
- Identification of exposure pathways
- Quantification of exposure

6.3.1 Characterization of Exposure Setting

Characterizing an exposure setting consists of two parts: (1) identifying the physical characteristics of the site as they relate to exposure, and (2) characterizing human populations on or near the site (the potentially exposed populations).

Basic site characteristics such as physical setting, climate, groundwater hydrology, and the presence and location of surface water were summarized in the Section 3.

Potentially exposed populations are identified based on their locations relative to the site, their activity patterns, and the presence of potentially sensitive subpopulations. Table 6-4 summarizes the potentially exposed populations evaluated in this risk assessment.

The investigation of NSWC–White Oak in general, and Site 49 in particular, is being conducted in response to the closure of NSWC–White Oak under the BRAC program. The installation officially closed in mid-1997 following the 1995 BRAC Commission closure decisions. The majority of the former Navy facility was transferred to and is currently managed by the GSA, in preparation for eventual transfer to other government agencies. A

portion of the original Navy facility, including part of Site 49, is currently occupied by AEDC, which leases the property from GSA.

6.3.1.1 Current Land Use

Groundwater is not currently used as a potable water supply on government property at the site. Three private residential supply wells had operated in the downgradient of government property, approximately 1.2 miles downstream of Site 49 along Paint Branch. Two of these wells were closed and the residents were hooked up to the public water supply for reasons unrelated to the groundwater contamination found at Site 49. The third well is still active and it is located well outside the area impacted by Site 49, 1.2 miles from the site. Risk assessments have been performed on these residential wells for current conditions by EPA Region III using well-specific data. These EPA risk assessments should be deferred to in determining risks related to the use of the residential wells.

There were no COPCs retained for surface water; therefore, exposure to surface water is not a concern under current land uses.

6.3.1.2 Potential Future Uses

Groundwater generally occurs below the unconsolidated sediments, in the bedrock at Site 49. Future potable use of groundwater from the bedrock aquifer within government property is unlikely given the generally poor yield of the bedrock aquifer and because a public supply is readily available in the area whose use is required by local law for all new needs. The water in the bedrock aquifer that may be affected by the site discharges to surface water within and bordering Site 49, and therefore, any potential users of groundwater outside the boundaries of Site 49 would not be affected now or in the future.

Exposure to groundwater by future residents located on the site is conservatively evaluated in this risk assessment. A construction worker may also be exposed to the shallow aquifer groundwater during excavation/construction activities. The construction worker exposure to the groundwater scenario is conservative, because, under typical excavation activities, the water table likely would be lowered to reduce groundwater infiltration into the excavation. This would reduce the potential for contact with the groundwater. However, the potential exposure by the construction worker to groundwater was included to provide a conservative evaluation of site risk.

As mentioned above, there were no COPCs retained for surface water, therefore, exposure to surface water is not a concern under future land uses.

6.3.2 Identification of Exposure Pathways

An exposure pathway can be described as a route through which a COPC moves from its source to an exposed population or individual, referred to as a receptor. An exposure pathway must be complete for exposure to occur. A complete exposure pathway has five elements:

- A source (e.g., chemical residues in soil)
- A mechanism for release and migration of chemical (e.g., runoff)
- An environmental transport medium (e.g., surface water)
- A point or site of potential human contact (exposure point, e.g., contact with groundwater)

- A route of intake (e.g., ingestion of groundwater)

All five elements must be present for a pathway to be considered complete. If one or more elements are not present, then the pathway is incomplete and there is no possibility of exposure. The following subsections discuss the elements as they pertain to the site.

6.3.2.1 Contaminant Sources

Groundwater contamination at Site 49 consists of chlorinated solvents, specifically TCE, *cis*-1,2-DCE and vinyl chloride. TCE appears to have been released to the environment in the vicinity of Building 427, presumably through a former leaching well that had been connected to several sink drains in the building.

6.3.2.2 Release and Transport Mechanisms

Identified media at Site 49 include contaminated groundwater. The constituents detected in groundwater were primarily VOCs although some metals have been detected. Concentrations of TCE in groundwater were highest in the downgradient monitoring wells, indicating downgradient transport of VOCs in the groundwater. Because groundwater discharges to Paint Branch, it is possible that groundwater contamination may migrate into Paint Branch. However, none of the COPCs present in groundwater were detected in Paint Branch surface water. Absent detectable concentrations of COPCs, the surface water pathway is incomplete. None of the VOC COPCs detected in groundwater were detected in soil samples collected at Site 49 so soil was not included in the risk assessment process.

6.3.2.3 Potential Exposure Points and Exposure Routes

Exposure points are locations where humans could come in contact with contamination. On-site exposure points include groundwater and Paint Branch surface water.

Potential exposure routes for groundwater and surface water are evaluated for potential current and future site use. Existing and potential exposure pathways are illustrated in the conceptual exposure model (Figure 6-1). Exposure scenarios and potentially complete pathways of exposure evaluated in this risk assessment are presented in Table 6-4.

6.3.2.4 Current Exposure Routes

The only currently accessible media evaluated in the risk assessment is surface water. There were no COPCs retained for the surface water, and no current use of or potential exposure to groundwater. Therefore, there are no current receptors for contaminated Site 49 media.

6.3.2.5 Future Exposure Routes

The property currently is owned by the government and the proposed future use of the site is expected to remain industrial. Therefore, the most likely future receptors for the media evaluated in the human health risk assessment would be construction workers. A future residential scenario is also included conservatively in this evaluation. The construction worker may be exposed to the groundwater during excavation activities. It was conservatively assumed that groundwater at the site may be used as a potable water supply in the future. Table 6-4 lists the potential future exposure routes for each of these receptors. Air quality inside Building 427 is not identified as a concern in table 6-4 because the

building abandoned and is slated for demolition. No other building are located above the Site 49 groundwater plume.

The exposure pathways discussed above and identified in Table 6-4 were selected in consultation with USEPA Region III, MDE, and the Navy, and were presented in the Project Plans, Remedial Investigation of Site 49 (CH2M HILL, March 2002). These pathways were quantified for potential exposure.

6.3.3 Quantification of Exposure

Exposure is quantified by estimating the exposure point concentrations and chemical intake by the receptors for both the reasonable maximum exposure (RME) and central tendency (CT) scenarios.

6.3.3.1 Exposure Point Concentrations

Exposure point concentrations are estimated chemical concentrations that a receptor may contact and are specific to each exposure medium. Exposure point concentrations may be directly monitored or estimated using environmental fate and transport models. For this assessment, fate and transport modeling was used to estimate constituent concentrations in vapors from groundwater while showering, and in vapors volatilized from groundwater from an open excavation. Volatilization while showering with groundwater was estimated using the Foster and Chrostowski shower model (Foster and Chrostowski, 1987). Concentrations of VOCs in air resulting from volatilization from groundwater in an open excavation were calculated using a two-film volatilization model. The model calculations are shown in Tables 7.1.RME Supplement B and 7.4.RME Supplement B in Appendix H.

The RME exposure point concentrations were calculated as the 95 percent upper confidence limit (95% UCL), the 97.5% UCL, or the 99% UCL of the arithmetic mean concentration. The maximum detected concentration was used in place of the appropriate UCL as the exposure point concentration when the calculated UCL was greater than the maximum detected value or when less than ten samples were available for the data grouping.

ProUCL, Version 2.1 (USEPA, April 2002), was used to calculate the UCLs and determine the distribution the data fit. The ProUCL program uses the Shapiro-Wilk W-test to determine if the data fit a lognormal or normal distribution for data sets with less than 50 samples. The distribution that the data fit is then used to chose the method that ProUCL uses to calculate the UCL. For data that were determined to fit a normal distribution, the student's t-statistic was used to calculate the 95% UCL. For data determined to fit a lognormal distribution, either Land's H-statistic was used to calculate the 95% UCL, or the Chebyshev Theorem using the MVUE of the parameters was used to calculate the 95% UCL or 99% UCL, depending on the standard deviation of the data set. For data that fit neither a lognormal or normal distribution, the Chebyshev Theorem using the sample arithmetic mean and standard deviation was used to calculate the 95% UCL, 97.5% UCL, or 99% UCL, depending on the standard deviation of the data set. The recommendations outlined in the ProUCL model documentation were used to select the appropriate UCL. For data sets that fit both a lognormal and normal distribution, the distribution with the higher W-value was used to calculate the UCL.

The CT exposure point concentrations were calculated as the mean value. If the data fit a lognormal distribution, the mean was calculated based on a lognormal distribution. If the data fit a normal distribution the mean was calculated based on a normal distribution. For data sets that fit either both a lognormal and normal distribution, or neither a lognormal or normal distribution, the distribution with the higher W-value was used to calculate the mean concentration.

The exposure point concentrations are included in Appendix H, Tables 3.1.RME, 3.2.RME, 3.1.CT, and 3.2CT.

Both unfiltered and filtered groundwater samples were collected and analyzed for metals. The filtered groundwater data were used to evaluate the residential scenario because the difference in the aluminum, iron, and manganese concentrations between the unfiltered and filtered samples were, in most cases, an order of magnitude (USEPA, August 1992). Additionally, groundwater is assumed to be filtered through a well-developed well prior to use as a potable supply. However, the unfiltered groundwater results were used for evaluating potential exposures to the construction worker because the construction worker would be directly exposed to the groundwater in the excavation.

6.3.3.2 Estimation of Chemical Intakes for Individual Pathways

Chemical intake is the amount of the chemical contaminant entering the receptor's body. Chemical intakes are generally expressed as follows:

$$I = \frac{C \; x \; CR \; x \; EF \; x \; ED}{BW \; x \; AT} = (mg/kg/day)$$

Where:

I = intake (mg/kg-day)

C = chemical concentration at exposure point (mg/L, mg/kg, mg/m^3)

CR= contact rate, or amount of contaminated medium contacted per unit time or event (L/day, mg/event, m^3/day)

EF= exposure frequency (days/year)

ED= exposure duration (years)

BW= body weight of exposed individual (kg)

AT= averaging time, or period over which exposure is averaged (days)

The intake equation requires specific exposure parameters for each exposure pathway. Appendix H, Tables 4.1.RME, 4.2.RME, 4.1.CT, and 4.2.CT present the exposure factors used for different scenarios at the site. Both RME and CT intakes were included in this evaluation. CT intakes were calculated for exposure scenarios with RME cumulative cancer risks greater than $1x10^{-4}$ or cumulative non-carcinogenic hazard indices greater than 1.

The methods presented in USEPA RAGS, Volume 1, Part E, Supplemental Guidance for Dermal Risk Assessment (USEPA, September 2001) were used to evaluate dermal exposure to groundwater. The non-steady state model or pseudo steady-state model was used to estimate the dermally absorbed dose per event for organic constituents (USEPA, September 2001), depending on exposure time. If the exposure time (or event time, t_{event}) was shorter

than the time to reach steady-state (t*), the non-steady state model was used. If t_{event} was greater than t*, the pseudo-steady state model was used. For inorganics, the absorbed dose was calculated using a steady-state approach. These models are shown in Tables 4.1.RME, 4.2.RME, 4.1, CT, and 4.2.CT in Appendix H. The chemical-specific skin permeability constants, along with the additional chemical specific parameters needed for the dermal exposure calculations, are included in Table 6-5.

For residential exposure to groundwater, lifetime age-adjusted intakes were calculated for carcinogenic constituents. Age-adjusted exposure factors were calculated using the equations presented in the USEPA Region III RBC table (USEPA, April 2003).

6.4 Toxicity Assessment

The toxicity assessment defines the relationship between the magnitude of exposure and possible severity of adverse effects, and weighs the quality of available toxicological evidence. Toxicity assessment generally consists of two steps: hazard identification and dose-response assessment. Hazard identification is the process of determining the potential adverse effects from exposure to the chemical along with the type of health effect involved. Dose-response assessment is the process of quantitatively evaluating the toxicity information and characterizing the relationship between the dose of the contaminant administered or received and the incidence of adverse health effects in the exposed population. Toxicity criteria (e.g., reference doses and slope factors) are derived from the dose-response relationship.

USEPA has performed the toxicity assessment step for many chemicals and has published the results in the Integrated Risk Information System (IRIS) and Health Effects Assessment Summary Tables (HEAST) databases. The IRIS database is the USEPA's preferred source of toxicity information and only includes reference doses (RfDs) and cancer slope factors (CSFs) that have been verified by USEPA work-groups. The HEAST were consulted when data were not available in IRIS. If data were not available from either of these sources, toxicity values provided in USEPA's RBC table (April 2004) were used. If no toxicity values were available, the chemical was evaluated qualitatively.

Health effects are divided into two broad groups: non-carcinogenic and carcinogenic. This division is based on the different mechanisms of action currently associated with each category. Chemicals causing non-carcinogenic health effects are evaluated independently from those having carcinogenic effects. Some chemicals may produce both non-carcinogenic and carcinogenic effects, and are therefore evaluated in both groups. This section discusses non-carcinogenic and carcinogenic effects separately.

Per USEPA guidance, oral toxicity values (RfDs and CSFs) were adjusted from administered doses to absorbed doses for evaluating dermal toxicity. The RfDs and CSFs were adjusted using oral to dermal adjustment factors from USEPA (September 2001). If a chemical-specific adjustment factor was not available, a default value of 100 percent was used. The adjusted dermal RfDs and CSFs are summarized in Appendix H, Tables 5.1 and 6.1, respectively.

6.4.1 Toxicity Information for Non-carcinogenic Effects

Non-carcinogenic health effects include a variety of toxic effects on body systems, such as renal toxicity (toxicity to the kidneys) and central nervous system disorders. Non-carcinogenic health effects can be grouped into two basic categories: acute toxicity and chronic toxicity. Acute toxicity can occur after a single exposure (usually at high doses), and the effect is most often seen immediately. Chronic toxicity generally occurs after repeated exposure (usually at low doses) and is seen months or years after the initial exposure. The toxicity of a chemical is assessed through a review of toxic effects noted in short-term (acute) animal studies, long-term (chronic) animal studies, and epidemiological investigations of exposed human populations, typically in the workplace.

USEPA (December 1989) defines the chronic RfD as a dose that is likely to be without appreciable risk of deleterious effects during a lifetime of exposure. Chronic RfDs are specifically developed to be protective for long-term exposure to a chemical (for example, 7 years to a lifetime), and consider uncertainty in the toxicological data base and sensitive receptors. Chronic RfDs may be overly protective if used to evaluate the potential for adverse health effects resulting from short-term exposure. USEPA's National Center for Environmental Assessment (NCEA) develops subchronic RfDs for short-term exposure (2 weeks to 7 years). Subchronic RfDs were used for the construction worker scenario because the exposure duration is assumed to be 1 year.

USEPA-derived oral and inhalation RfDs and associated uncertainty factor (UF) and modifying factor (MF) values for the COPCs at Site 49 are listed in Tables 5.1 and 5.2 in Appendix H.

6.4.2 Toxicity Information for Carcinogenic Effects

Potential carcinogenic effects from human exposure to chemicals are estimated quantitatively using oral and inhalation CSFs. CSFs may be derived from the results of chronic animal bioassays, human epidemiological studies, or both. Animal bioassays are usually conducted at dose levels that are much higher than levels likely to be produced by human exposure to environmental media. This design detects possible adverse effects in the relatively small test populations used in the studies. These high dose levels must be extrapolated to lower doses. A number of mathematical models and procedures have been developed to extrapolate from the high doses used in the studies to the low doses typically associated with environmental exposures.

The USEPA-preferred linearized multistage model is usually used to estimate the largest linear slope (within the upper 95 percent UCL) at low extrapolated doses that is consistent with the data. The 95 percent UCL slope of the dose-response curve is subjected to various adjustments, including an inter-species scaling factor, to derive a CSF. It is assumed that if a cancer response occurs at the dose level in the study, there is some probability that a response will occur at all lower exposure levels (i.e., a dose-response relationship with no threshold is assumed). Dose-response data derived from human epidemiological studies are fitted to dose-time-response curves on an ad hoc basis. In both types of analyses, conservative (e.g., health protective) assumptions are applied and the models are believed to provide rough estimates of the upper limits on potential lifetime risk.

In addition to deriving a quantitative estimate of cancer potency, USEPA also assigns weight-of-evidence classifications to potential carcinogens. Chemicals are classified as Group A, Group B1, Group B2, Group C, Group D, or Group E carcinogens.

- Group A chemicals (known human carcinogens) are agents for which there is sufficient evidence to support the causal association between exposure to the agents in humans and cancer.
- Group B1 chemicals (probable human carcinogens) are agents for which there is limited evidence of possible carcinogenicity in humans with sufficient evidence of carcinogenicity in laboratory animals.
- Group B2 chemicals (probable human carcinogens) are agents for which there is sufficient evidence of carcinogenicity in animals but inadequate evidence in humans.
- Group C chemicals (possible human carcinogens) are agents for which there is limited evidence of carcinogenicity in animals and inadequate or a lack of human data.
- Group D chemicals (not classifiable as to human carcinogenicity) are agents with inadequate human and animal evidence of carcinogenicity or for which no data are available.
- Group E chemicals (evidence of non-carcinogenicity in humans) are agents for which there is no evidence of carcinogenicity from human or animal studies, or both.

USEPA-derived oral and inhalation CSFs are listed in Tables 6.1 and 6.2, respectively, in Appendix H.

6.4.3 Chemicals for Which no USEPA Toxicity Values Are Available

Most of the chemicals detected at Site 49 have toxicity factors. Lead, which was detected in surface water and groundwater, does not have available published toxicity factors. Lead is regulated by USEPA based on blood-lead uptake using a physiologically-based pharmakokinetic model referred to as the IEUBK model. As a screening tool, lead is screened against the Safe Drinking Water Act action level of 15 µg/l in surface water and groundwater. Additionally, 4-chloro-3-methylphenol and phenanthrene do not have published toxicity factors. The RBC for 2-chlorophenol was used as a surrogate for 4-chloro-3-methylphenol and the RBC for pyrene was used as a surrogate for screening phenanthrene during the COPC screening process, based on previous recommendations by USEPA Region III.

6.4.4 Toxicity Profiles of Selected Chemicals

Detailed toxicity information for the COPCs can be found in USEPA's IRIS database, Agency for Toxic Substances and Disease Registry (ATSDR) toxicological profiles, and other published literature.

6.5 Risk Characterization

Risk characterization is the process of integrating the previous elements of the risk assessment into quantitative and semi-quantitative expressions of risk. The quantification of

risk is then used as an integral component in remedial decision-making and selection of potential remedies or actions, as necessary.

6.5.1 Non-carcinogenic and Carcinogenic Risk Estimation Methods

Potential human health risks are discussed independently for carcinogenic and non-carcinogenic contaminants because of the different toxicological endpoints, relevant exposure duration, and methods used to characterize risk. The non-carcinogenic health impacts from carcinogens are also assessed.

6.5.1.1 Non-carcinogenic Risk Estimation

Non-carcinogenic health risks are estimated by comparing actual or expected exposure levels to threshold concentrations (or RfDs). The expected intake divided by the RfD is equal to the hazard quotient (HQ; unitless):

$$\text{Hazard Quotient (HQ)} = \text{Intake} / \text{RfD}$$

The intake and RfD are expressed in the same units and represent the same exposure period (i.e., chronic or subchronic). The intake and RfD also represent the same exposure route, (i.e., oral intakes are divided by the oral RfD). When HQ exceeds unity (i.e., exposure exceeds the RfD), a certain degree of health risk is indicated. To assess the potential for non-carcinogenic health effects posed by exposure to multiple chemicals, a "hazard index" approach is used (USEPA, December 1989). This approach assumes that non-carcinogenic hazards associated with exposure to more than one chemical are additive. Synergistic or antagonistic interactions between chemicals are not accounted for. The hazard index (HI) may exceed unity even if all of the individual HQs are less than one. The chemicals may then be segregated by similar mechanisms of toxicity and toxicological effects, and separate HIs derived based on mechanism and target organs affected.

6.5.1.2 Carcinogenic Risk Estimation

The potential for carcinogenic effects due to exposure to site-related contamination is evaluated by estimating excess lifetime cancer risk. Excess lifetime carcinogenic risk is the incremental increase in the probability of developing cancer during one's lifetime in addition to the background probability of developing cancer. For example, the background incidence of cancer in the U.S. population is approximately 30 percent (including both lethal and non-lethal forms). Therefore, a 2×10^{-6} excess lifetime carcinogenic risk means that an individual's probability of developing cancer in his or her lifetime changes from approximately 0.300000 to 0.300002. Or, expressed another way, for every 1 million people exposed to the carcinogen throughout their lifetime, the incidence of cancer *may* increase by two cases.

Risk is calculated by multiplying the intake by the CSF.

$$\text{Risk} = \text{Intake} \times \text{CSF}$$

The linear equation for calculating risks is only valid at low risk levels. For risks at high levels (above 0.01), the one-hit equation, which is consistent with the linear low-dose model, is used. The one-hit equation is calculated as follows:

$$\text{Risk} = 1 - \exp(-\text{Intake} \times \text{CSF})$$

The combined risk from exposure to multiple chemicals at a site was evaluated by adding the risks from individual chemicals. Risks were also added across the pathways, if an individual could be exposed through multiple pathways. For example, a person contacting the groundwater on-site could be exposed by both the oral and dermal pathways.

When a cumulative carcinogenic risk to an individual receptor under the assumed RME exposure conditions at the site exceeds 100 in a million (10^{-4} excess cancer risk), CERCLA generally requires remedial action to reduce the potential risks at the site (USEPA, March 1991). If the cumulative risk is less than 10^{-4}, action generally is not required, but may be warranted if a risk-based chemical-specific standard (e.g., an maximum contaminant level; MCL), is exceeded. Cumulative risks less than 10^{-6} are generally considered acceptable, and no further action may be warranted. A risk-based remedial decision could be superseded by the presence of non-carcinogenic impact or environmental impact requiring action at the site.

6.5.2 Risk Assessment Results

The results of the risk characterization are presented below for each potential receptor. A summary of the results is shown in Table 6-6 for the RMEs and Table 6-7 for the CTs. CT risks were calculated only when the RME hazards exceeded 1 or the cancer risks exceeded 10^{-4}.

The non-carcinogenic hazards and carcinogenic risks are calculated in Appendix H, Tables 7.1. RME through 7.4.RME, and 7.1.CT through 7.4.CT. Tables 9.1.RME through 9.4.RME, and 9.1.CT through 9.4.CT in Appendix H summarize the RME and CT total potential risks to each receptor. Tables 10.1.RME through 10.4.RME, and 10.1.CT in Appendix H summarize only the chemicals that contribute to a total HI greater than 1.0 or total carcinogenic risks greater than 10^{-4}. Each potentially exposed population is discussed below, in the context of non-carcinogenic and carcinogenic risks.

Current/Future Adult and Adolescent Recreational Person

The risk assessment assumed that current/future recreational adults and adolescents could be exposed to surface water along the reach of Paint Branch adjacent to Site 49. Since no COPCs were retained for surface water, this pathway was not quantified. There are no unacceptable risks to potential recreational receptors exposed to Paint Branch surface water.

Future Resident

For the purpose of risk estimation, it was assumed that groundwater from beneath the site would be used as a future residential potable water supply. Therefore, the child and adult resident were evaluated for potential exposure to groundwater through potable use. Carcinogenic risks were calculated for a lifetime resident instead of for the individual child and adult resident, as directed by USEPA Region III risk assessment guidance. Tables 9.1.RME, 9.2.RME, 9.3.RME, 9.1.CT, 9.2.CT, and 9.3.CT in Appendix H, summarize the hazards and risks to the future adult, child, and lifetime residents.

The non-carcinogenic hazard associated with exposure to groundwater by an adult resident is 34, which is greater than USEPA's target hazard index of 1.0. The non-carcinogenic hazard associated with exposure to groundwater by a child resident is 79, which is also greater than the USEPA's target hazard index. The hazards to both receptors occur through the ingestion and dermal contact exposure routes.

TCE constitutes the majority of the hazard (55 for the child). *Cis*-DCE, chromium, iron, manganese, and vanadium also contribute HQs above 1.0. The maximum detected concentrations of each of these constituents (except for vanadium) were used as the EPC since the calculated 95%UCLs were greater than the maximum detected concentrations. The CT non-carcinogenic hazards for an adult resident and a child resident are 0.79 and 2.5, respectively. The CT non-carcinogenic hazard to the child resident is greater than the USEPA target hazard index of 1.0. The hazard is associated with ingestion and dermal contact with TCE.

The RME carcinogenic risk associated with exposure to groundwater by the resident exposed over his or her lifetime is $1.3x10^{-1}$, which exceeds USEPA's potentially acceptable risk range of $1x10^{-6}$ to $1x10^{-4}$. 1,2-Dibromoethane, with a smaller contribution from TCE, vinyl chloride, and PCE, are the main carcinogenic risk drivers, through the ingestion and dermal contact exposure routes. The maximum detected concentrations of TCE, PCE, and vinyl chloride were used as the EPC for the RME risk calculations. 1,2-Dibromoethane was only detected in one of the 16 groundwater samples. The CT carcinogenic risk is $1.3x10^{-3}$, which also exceeds USEPA's acceptable risk range.

Future Construction Worker

The risk assessment assumed that a future construction worker could be exposed to groundwater in an open excavation during any construction or excavation activities at the site. Tables 9.4.RME and 9.4.CT in Appendix H summarize the hazards and risks to the construction worker.

The non-carcinogenic hazard index associated with exposure groundwater by a construction worker (3.7) is above USEPA's target hazard index of 1.0. TCE is the only constituent that contributes an individual HQ above 1.0. The carcinogenic risk associated with exposure to the groundwater by a construction worker is $9.7x10^{-5}$, which is within the USEPA's target risk range of $1x10^{-6}$ to $1x10^{-4}$. The CT non-carcinogenic hazard due to exposure to groundwater (0.11) is below the USEPA target hazard index. The CT carcinogenic risk ($2.7x10^{-6}$)is within the range generally considered acceptable by USEPA.

6.6 Uncertainty Associated with Human Health Assessment

The risk measures used in site risk assessments are not fully probabilistic estimates of risk but are conditional estimates given that a set of assumptions about exposure and toxicity are realized. Thus it is important to specify fully the assumptions and uncertainties inherent in the risk assessment to place the risk estimates in proper perspective.

A qualitative/semi-quantitative analysis of each of the risk assessment components is sufficient for most of the sites. A site-specific discussion on the individual components of the risk assessment is presented in the following subsections.

6.6.1 General Uncertainty in COPC Selection

The uncertainty in sampling and possibility of missing a contaminated location is expected to be minimal at this site because of the amount of sampling data available for the site. The quantitative uncertainty associated with the other factors is also minimal as the data have been fully validated prior to use in the risk assessment. The general assumptions used in the COPCs selection are conservative to ensure the estimation of highest possible risk. For example, chromium was selected as a COPC under the assumption that all chromium detected was present in its more toxic hexavalent state.

A background comparison was not included in the COPC selection process. Therefore, some of the constituents that were retained as COPCs may be associated with background site conditions. However, the main risk drivers for the groundwater were VOCs, which would not be associated with background conditions at the site. Section 6.6.5 includes a comparison of the inorganic risk drivers in groundwater to background concentrations.

6.6.2 Uncertainty Associated with Exposure Assessment

Most of the exposure pathways analyzed are assumed, and exposure factors used for quantitation of exposure are conservative and reflect worst-case or upper-bound assumptions on the exposure.

It was assumed that the site may be used for residential purposes in the future, however potable use of groundwater at Site 49 or NSWC–White Oak is unrealistic.

The model used to evaluate the dermal absorption of constituents in groundwater during bathing or while in an open excavation result in a large degree of uncertainty. The many parameters needed for this evaluation all have a large degree of uncertainty and are calculated based on chemical properties, and do not take into account the specific properties of the groundwater.

Exposure to soil was not evaluated in this risk assessment. If site-related constituents are detected in the soil, exclusion of this pathway in the risk assessment may result in an underestimation of risk associated with current and potential future site use.

The maximum detected concentrations of many of the groundwater COPCs were used as the EPC for the RME risk calculations.

6.6.3 Uncertainty Associated with Toxicity Assessment

Uncertainty associated with the non-carcinogenic toxicity factors are included in Tables 5.1 and 5.2 in Appendix H. Several UFs may be applied to account for uncertainty in the RfDs. UFs account for uncertain data quality, extrapolation of data from animal studies to human exposures, or the use of subchronic studies to develop chronic criteria. These UFs range between 10 to 10,000 and reflect the varying degrees of uncertainty in the toxicity criteria.

The uncertainty associated with CSFs is mostly associated with low dose extrapolation where carcinogenicity at low doses is assumed to be a straight line response. This assumption is conservative, which introduces greater uncertainty into slope factors extrapolated from this area of the dose-response curve. In addition, most of the experimental studies indicate the existence of a threshold for carcinogenicity, while the extrapolation process assumes no

threshold. Additional uncertainty exists in the prediction of relative sensitivities of different species of animals and the applicability of animal data to humans.

Therefore, the CSFs developed by the USEPA represent upper-bound estimates. Any carcinogenic risks generated in this assessment also should be regarded as upper-bound estimates on the potential carcinogenic risks rather than an accurate representation of actual carcinogenic risk. The true carcinogenic risk is likely to be less than the predicted value.

Following U.S. Navy Policy, the TCE toxicity values presented in the USEPA's 2001 External Review Draft, *Trichloroethylene Health Risk Assessment: Synthesis and Characterization* were not used in this risk assessment. In December 2001, the Air Force Institute for Environment, Safety, and Occupational Health Risk Analysis (AFIERA) prepared a *Critique of the U.S. Environmental Protection Agency's Draft Trichloroethylene Health Risk Assessment (EPA/600/P-01/002A)* on behalf of DoD. The DoD critique cited numerous shortcomings of the EPA's 2001 TCE health assessment and concluded that the 2001 draft health assessment is not based on sound scientific evidence. Based on this conclusion, as stated by DoD, other branches of the military have not used the toxicity values in the 2001 draft TCE health assessment to make final remediation decisions at their bases. The provisional TCE toxicity values developed by NCEA in 1992 and 1997 were used in this risk assessment.

6.6.4 Uncertainty in Risk Characterization

The uncertainties identified in each component of risk assessment ultimately contribute to uncertainty in risk characterization. The summation of risks and HIs across pathways and chemicals contributes to uncertainty based on the interaction of chemicals such as additivity, synergism, potentiation, susceptibility of exposed receptors, etc.

In general, assessment of uncertainty is very important for sites with contaminant concentrations presenting a risk close to the acceptable limit level, with questionable exceedances (for example, slightly greater than the upper-bound risk ranges of 1 in 10,000 for carcinogenic risk or non-carcinogenic HI of 1.0).

6.6.5 Comparison of COPCs to Background Concentrations

Groundwater samples collected from background monitoring wells BGGW16, BGGW40, BGW100/BG, BGW101/BG, and BGW102/BG in July and October 1999 were compared to the data for the Site 49 risk drivers. The maximum detected site concentrations were compared to the 95% upper tolerance limits (UTLs) calculated for the background data (Tables 11.1 and 11.4 of Appendix H). In addition, a population-to-population comparison was conducted (background groundwater concentrations to site groundwater concentrations; Tables 11.1, 11.2, and 11.3 of Appendix J). For the population-to-population comparison, the Student *t*-test was used since both the background and the site data fit lognormal distributions. This analysis was supplemented with the non-parametric Mann-Whitney U test.

The filtered bedrock aquifer site data were compared to the filtered shallow aquifer background data. There were no unacceptable risks associated with exposure to unfiltered groundwater, and therefore, unfiltered site groundwater data were not compared to the unfiltered background groundwater data.

None of the organic COPC risk drivers were detected in the background samples, and, therefore, a background comparisons was not performed for these constituents. Chromium and vanadium were not detected in the background data set, and are also therefore assumed to be present in site groundwater at concentrations above background levels. The maximum detected concentrations of iron and manganese, the other two risk drivers, in the filtered site groundwater samples are all greater than the UTLs for the filtered shallow aquifer background samples. The Student t-test showed that both iron and manganese are present in the site groundwater at concentrations statistically greater than the background groundwater. Based on the Mann-Whitney U test, manganese is present in site filtered groundwater at statistically similar concentrations to filtered shallow background groundwater, however, iron is present at concentrations statistically greater than the background concentrations.

Therefore, based on a statistical analysis, all of the COPC risk drivers detected in Site 49 groundwater occur at concentrations statistically greater than White Oak background concentrations.

6.7 Summary

This baseline risk assessment was conducted to evaluate the potential human health risks associated with the site-related activities for:

- surface water in Paint Branch, and
- bedrock groundwater.

Soil was not evaluated in the risk assessment because Site 49 was initially identified as a groundwater contamination site and during subsequent sampling, none of the COPCs in groundwater could be found in the soil and no discernable area of waste disposal has been identified in the soil at the site (based on site data and historic records searches) that can be attributed as the source of the VOCs found in groundwater.

Surface water data was screened against human health risk screening criteria, however no COPCs were retained for Paint Branch surface water, and, therefore, no unacceptable risks are associated with this medium.

Potential risks associated with bedrock groundwater were calculated for the following populations:

- future adult resident,
- future child resident,
- future lifetime resident, and
- future construction worker.

This risk assessment quantifies potential human health risks at Site 49 under future use scenarios, if no remediation is implemented.

The groundwater has carcinogenic risks and non-carcinogenic hazards greater than the USEPA target levels. Tables 6-6 and 6-7 summarize the risks and hazards for the RME and CT scenarios, respectively. The following receptors have total RME non-carcinogenic hazards or carcinogenic risks that exceeded USEPA's target levels:

- a future residential adult and child exposed to groundwater,
- a future construction worker exposed to groundwater.

The CT risks for the residential scenarios also exceeded USEPA target levels.

The majority of the risk from the groundwater is associated with TCE, cis-1,2-DCE, 1,2-dibromoethane, PCE, and vinyl chloride. Chromium, iron, manganese, and vanadium also contribute to the risks and hazards, but to a much lesser extent.

The maximum detected concentrations of TCE, *cis*-1,2-DCE, vinyl chloride, chromium, iron, and manganese were used to calculate the RME risks and hazards. The maximum concentrations of TCE detected during each groundwater sampling event were detected in the same monitoring well (049GW201D). These concentrations were an order of magnitude greater than concentrations in surrounding monitoring wells. Monitoring well 049GW201D is located at the downgradient edge of Site 49. 1,2-Dibromoethane was only detected in one (049GW200) out of 16 groundwater samples. This detection was used as the EPC for the RME risk calculations. The maximum detected concentrations of the inorganic constituents occurred in monitoring wells 049GW206M and 049GW203.

Table 6-1
Samples Evaluated in Human Health Risk Assessment
Site 49 RI Report
NSWC - White Oak
Silver Spring, Maryland

Surface Water	Groundwater
PBSW2100001	049GW2020001
PBSW2110001	049GW2029901[2]
PBSW2119901[1]	049GW2030001
PBSW2120001	049GW2000001
PBSW2130001	049GW201S001
	049GW201D001
	049GW2030002
	049GW2020002
	049GW201S002
	049GW201S9902[3]
	049GW2000002
	049GW201D002
	049GW202D001
	049GW206D001
	049GW206D9901[4]
	049GW206M001
	049GW206S0001
	049GW201DD001

[1] duplicate of PBSW2110001
[2] duplicate of 049GW2020001
[3] duplicate of 049GW201S001
[4] duplicate of 049GW206D001

Table 6-2
Comparison of Intakes of Human Nutrients to Recommended Daily Allowances
Site 49 RI Report
NSWC - White Oak
Silver Spring, Maryland

Media	Constituent	Adult RDA (mg/day)	Child RDA (mg/day)	Maximum Detected Concentration	Units	Adult Calculated Daily Intake (mg/day)	Child Calculated Daily Intake (mg/day)	Calculated Intake less than RDA?
Surface Water	Calcium	8.0E+02	8.0E+02	1.5E+04	ug/L	1.5E-01	1.5E-01	Yes
	Magnesium	2.8E+02	1.2E+02	4.1E+03	ug/L	4.1E-02	4.1E-02	Yes
	Potassium	2.0E+03	1.4E+03	3.1E+03	ug/L	3.1E-02	3.1E-02	Yes
	Sodium	5.0E+02	3.0E+02	1.3E+04	ug/L	1.3E-01	1.3E-01	Yes
Groundwater - Bedrock Aquifer (Filtered)	Calcium	8.0E+02	8.0E+02	5.4E+04	ug/L	1.1E+02	5.4E+01	Yes
	Magnesium	2.8E+02	1.2E+02	1.4E+04	ug/L	2.8E+01	1.4E+01	Yes
	Potassium	2.0E+03	1.4E+03	1.1E+04	ug/L	2.3E+01	1.1E+01	Yes
	Sodium	5.0E+02	3.0E+02	1.3E+05	ug/L	2.6E+02	1.3E+02	Yes
Groundwater - Bedrock Aquifer (Unfiltered)	Calcium	8.0E+02	8.0E+02	5.5E+04	ug/L	1.1E+02	5.5E+01	Yes
	Magnesium	2.8E+02	1.2E+02	2.0E+04	ug/L	3.9E+01	2.0E+01	Yes
	Potassium	2.0E+03	1.4E+03	2.2E+04	ug/L	4.4E+01	2.2E+01	Yes
	Sodium	5.0E+02	3.0E+02	1.4E+05	ug/L	2.7E+02	1.4E+02	Yes

Calculated Daily Intakes

Surface Water
Daily Intake = C x IR x 1/1000 mg/ug
C = Groundwater concentration (ug/L)
IR = Ingestion Rate (0.01 L/day)

Groundwater
Daily Intake = C x IR x 1/1000 mg/ug
C = Groundwater concentration (ug/L)
IR = Ingestion Rate (adult - 2 L/day, child - 1 L/day)

Table 6-3
Chemicals of Potential Concern
Site 49 RI Report
NSWC - White Oak
Silver Spring, Maryland

Surface Water	Groundwater - Bedrock Aquifer (Filtered)	Groundwater - Bedrock Aquifer (Unfiltered)
None	1,2-Dibromoethane	1,2-Dibromoethane
	Chloroform	Chloroform
	Tetrachloroethene	Tetrachloroethene
	Trichloroethene	Trichloroethene
	Vinyl chloride	Vinyl chloride
	cis-1,2-Dichloroethene	cis-1,2-Dichloroethene
	trans-1,2-Dichloroethene	trans-1,2-Dichloroethene
	Aluminum	Aluminum
	Chromium	Arsenic
	Iron	Chromium
	Manganese	Copper
	Nickel	Iron
		Manganese
		Nickel
		Vanadium

Table 6-4
Summary of Exposure Pathways to be Evaluated During the Risk Assessment
Site 49 RI Report
NSWC - White Oak
Silver Spring, Maryland

Media	Exposure Route	Current/Future		Future			
		Recreational		Resident			Construction Worker
		Adult	Adolescent	Adult	Child	Child/Adult	
Surface Water							
	Ingestion	X*	X*	X*	X*	X*	
	Dermal	X*	X*	X*	X*	X*	
	Inhalation						
Groundwater							
	Ingestion			X	X	X	
	Dermal			X	X	X	X
	Inhalation			X			X

X Quantitative evaluation.
X* Not quantified, no COPCs retained for surface water.

Table 6-5
Dermal Worksheet
Intermediate Variables for Calculating DA(event)
Site 49 RI Report
NSWC - White Oak
Silver Spring, Maryland

Chemical of Potential Concern	Media	FA	Kp		T(event)		Tau		T*		B
		Value	Value	Units	Value	Units	Value	Units	Value	Units	Value
1,2-Dibromoethane	Groundwater	1	3.3E-03	cm/hr	adult - 0.58 child - 1.0 construction worker - 8.0	hour	1.2E+00	hour	2.8E+00	hour	1.1E-02
Chloroform	Groundwater	1	6.8E-03	cm/hr	adult - 0.58 child - 1.0 construction worker - 8.0	hour	5.0E-01	hour	1.2E+00	hour	2.9E-02
Tetrachloroethylene	Groundwater	1	3.3E-02	cm/hr	adult - 0.58 child - 1.0 construction worker - 8.0	hour	9.1E-01	hour	2.2E+00	hour	1.6E-01
Trichloroethene	Groundwater	1	1.2E-02	cm/hr	adult - 0.58 child - 1.0 construction worker - 8.0	hour	5.8E-01	hour	1.4E+00	hour	5.3E-02
Vinyl Chloride	Groundwater	1	5.6E-03	cm/hr	adult - 0.58 child - 1.0 construction worker - 8.0	hour	2.4E-01	hour	5.7E-01	hour	1.7E-02
cis-1,2-Dichloroethene	Groundwater	1	7.7E-03	cm/hr	adult - 0.58 child - 1.0 construction worker - 8.0	hour	3.7E-01	hour	8.9E-01	hour	2.9E-02
trans-1,2-Dichloroethene	Groundwater	1	7.7E-03	cm/hr	adult - 0.58 child - 1.0 construction worker - 8.0	hour	3.7E-01	hour	8.9E-01	hour	2.9E-02
Aluminum	Groundwater	NA	1.0E-03	cm/hr	adult - 0.58 child - 1.0 construction worker - 8.0	hour	NA	hour	NA	hour	NA
Arsenic	Groundwater	NA	1.0E-03	cm/hr	construction worker - 8.0	hour	NA	hour	NA	hour	NA
Chromium	Groundwater	NA	2.0E-03	cm/hr	adult - 0.58 child - 1.0 construction worker - 8.0	hour	NA	hour	NA	hour	NA
Copper	Groundwater	NA	1.0E-03	cm/hr	construction worker - 8.0	hour	NA	hour	NA	hour	NA
Iron	Groundwater	NA	1.0E-03	cm/hr	adult - 0.58 child - 1.0 construction worker - 8.0	hour	NA	hour	NA	hour	NA
Manganese	Groundwater	NA	1.0E-03	cm/hr	adult - 0.58 child - 1.0 construction worker - 8.0	hour	NA	hour	NA	hour	NA
Nickel	Groundwater	NA	2.0E-04	cm/hr	adult - 0.58 child - 1.0 construction worker - 8.0	hour	NA	hour	NA	hour	NA
Vanadium	Groundwater	NA	1.0E-03	cm/hr	construction worker - 8.0	hour	NA	hour	NA	hour	NA

FA = Fraction Absorbed Water
Kp = Dermal Permeability Coefficient of Compound in Water

T(event) = Event Duration (RME)
Tau = Lag Time

T* = Time to Reach Steady-State
B = Dimensionless Ratio of the Permeability Coefficient of a Compound Through the Stratum Corneum Relative to its Permeability Coefficient Across the Viable Epidermis

Table 6-6
Summary of RME Cancer Risks and Hazard Indices
Site 49 RI Report
NSWC - White Oak
Silver Spring, Maryland

Receptor	Media	Exposure Route	Cancer Risk	Chemicals with Cancer Risks >10^{-4}	Chemicals with Cancer Risks >10^{-5} and <10^{-4}	Chemicals with Cancer Risks >10^{-6} and <10^{-5}	Hazard Index	Chemicals with HI>1
Adult Resident	Groundwater	Ingestion	NA				410	Trichloroethene, cis-1,2-Dichloroethene, Iron, Manganese
		Dermal Contact	NA				71	Trichloroethene
		Inhalation	NA				0.04	
		Total	NA				481	Trichloroethene, cis-1,2-Dichloroethene, Iron, Manganese
Child Resident	Groundwater	Ingestion	NA				957	Trichloroethene, cis-1,2-Dichloroethene, Chromium, Iron, Manganese
		Dermal Contact	NA				160	Trichloroethene, Manganese
		Total	NA				1,117	Trichloroethene, cis-1,2-Dichloroethene, Chromium, Iron, Manganese
Life-Time Resident	Groundwater	Ingestion	6.9E-02	1,2-Dibromoethane, Trichloroethene, Vinyl chloride			NA	
		Dermal Contact	3.4E-01	1,2-Dibromoethane, Trichloroethene	Tetrachloroethene, Vinyl chloride		NA	
		Inhalation	3.1E-05		Trichloroethene		NA	
		Total	4.1E-01	1,2-Dibromoethane, Trichloroethene, Vinyl chloride	Tetrachloroethene		NA	
Adult Construction Worker	Groundwater	Dermal Contact	2.4E-04	1,2-Dibromoethane	Trichloroethene		1.8	
		Inhalation	2.2E-05		Trichloroethene		0.44	
		Total	2.6E-04	1,2-Dibromoethane	Trichloroethene		2.3	

NA - Not applicable in accordance with USEPA Region III Risk Assessment Guidance
All chromium assumed to be in hexavalent form

Table 6-7
Summary of CT Cancer Risks and Hazard Indices
Site 49 RI Report
NSWC - White Oak
Silver Spring, Maryland

Receptor	Media	Exposure Route	Cancer Risk	Chemicals with Cancer Risks $>10^{-4}$	Chemicals with Cancer Risks $>10^{-5}$ and $<10^{-4}$	Chemicals with Cancer Risks $>10^{-6}$ and $<10^{-5}$	Hazard Index	Chemicals with HI>1
Adult Resident	Groundwater	Ingestion	NA				9.9	Trichloroethene
		Dermal Contact	NA				1.6	Trichloroethene
		Inhalation	NA				0.0013	
		Total	NA				11	Trichloroethene
Child Resident	Groundwater	Ingestion	NA				33	Trichloroethene
		Dermal Contact	NA				3.1	Trichloroethene
		Total	NA				36	Trichloroethene
Life-Time Resident	Groundwater	Ingestion	1.2E-03	1,2-Dibromoethane, Trichloroethene	Vinyl Chloride		NA	
		Dermal Contact	3.5E-03	1,2-Dibromoethane, Trichloroethene		Tetrachloroethene, Vinyl Chloride	NA	
		Inhalation	4.1E-07				NA	
		Total	4.7E-03	1,2-Dibromoethane, Trichloroethene	Vinyl Chloride	Tetrachloroethene	NA	
Adult Construction Worker	Groundwater	Dermal Contact	5.9E-06			1,2-Dibromoethane, Trichloroethene	0.045	
		Inhalation	5.8E-07				0.011	
		Total	6.5E-06				0.056	

NA - Not applicable in accordance with USEPA Region III Risk Assessment Guidance

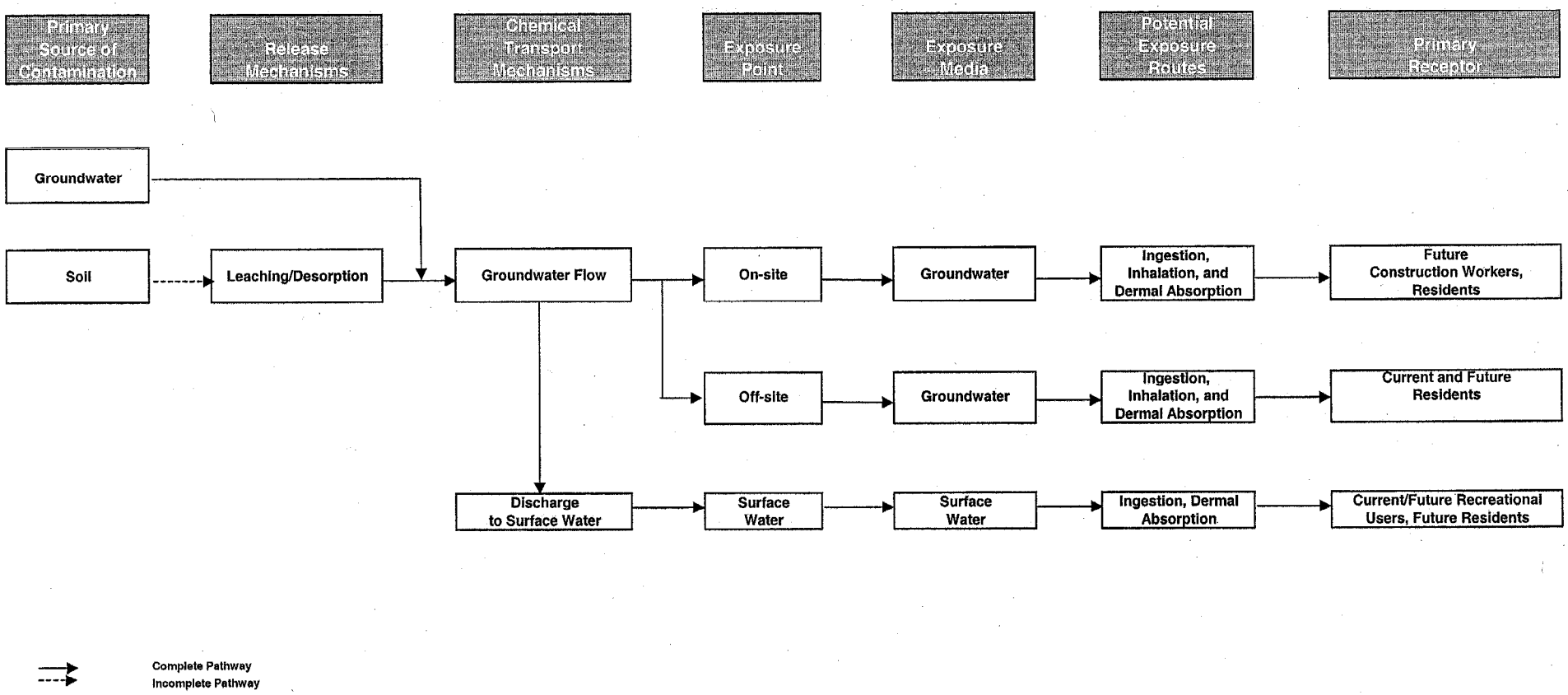

Figure 6-1
Conceptual Site Model for Potential Human Exposures-Site 49 RI Report
NSWC-White Oak
Silver Spring , Maryland

SECTION 7

Ecological Risk Assessment

Risks to ecological receptors were not evaluated as part of this RI. The media affected at Site 49 is groundwater, for which there are no ecological receptors. The pathway for contaminant (chlorinated VOC) migration to the groundwater was, in all likelihood, through a leaching well or building sump, and therefore would not involve impacts to soil near the ground surface where risks to ecological receptors would be an issue. Ecological risks from the surface water and sediment in the section of Paint Branch potentially affected by Site 49 have already been evaluated in a separate base-wide Ecological Risk Assessment (ERA). The surface water data collected during the Site 49 RI were consistent with prior data collected at this same location and used in the base-wide ERA. No chlorinated VOCs or other site-related contaminants, with the exception of iron, were detected in the surface water.

All of the compounds that were detected in the four samples, and one duplicate, collected from the surface water in Paint Branch as part of the Site 49 RI are presented in Table 7-1. As shown on this table, the only compound that exceeds the conservative ecological-risk-based screening criteria used during Base-wide Screening Level Ecological Risk Assessment (TTNUS, October 1999) is iron. Iron concentrations in unfiltered water samples ranged from 255 μg/L to 511 μg/L compared to the screening criteria of 320 μg/L. However none of the concentrations of iron found in the surface water at Site 49 exceed the refined screening criteria of 1,000 μg/L that was subsequently used in Step 3A of the ecological risk assessment (TTNUS, July 2000) to determine chemicals of potential concern in Paint Branch surface water. The 1,000 μg/L criteria is based on the federal Clean Water Act water quality criteria (WQC) for aquatic life.

Table 7-1
Detections In Paint Branch Surface Water Samples and Exceedances of Ecological Risk Screening Criteria
Site 49 RI Report
NSWC - White Oak, Silver Spring, Maryland

Station ID	BTAG Screening Criteria for Surface Water [1]	EPA WQC from Clean Water Act [2]	PBSW210		PBSW211		PBSW211		PBSW212		PBSW213	
Sample ID			PBSW2100001		PBSW2119901		PBSW2110001		PBSW2120001		PBSW2130001	
Sample Date			08/02/02		08/02/02		08/02/02		08/02/02		10/09/02	
Chemical Name												
Volatile Organic Compounds (UG/L)												
No Detections				U		U		U		U		U
Semivolatile Organic Compounds (UG/L)												
4-Chloro-3-methylphenol	63*		3.9	K	11	U	10	U	11	U	NA	
bis(2-Ethylhexyl)phthalate	30		1.4	J	2.5	J	1.4	J	11	U	NA	
Explosives (UG/L)												
No Detections												
Unfiltered Metals (UG/L)												
Barium	10,000		28.6	J	30	J	29.8	J	29.6	J	NA	
Calcium	NE		14,300		14,500		14,800		14,500		NA	
Iron	320	1000	255		511		373		343		NA	
Lead	3.2		1.5	UL	1.6	J	1.5	UL	1.5	UL	NA	
Magnesium	NE		4,020	J	4,020	J	4,090	J	4,040	J	NA	
Manganese	14,500		25.4		76.9		60.9		48.2		NA	
Nickel	160		1	U	4.1	J	1	J	1	U	NA	
Potassium	NE		2,930	J	2,970	J	3,100	J	2,950	J	NA	
Sodium	NE		12,400		12,500		12,900		12,500		NA	
Filtered Metals (UG/L)												
Barium	10,000		27.3	J	27.9	J	28.1	J	28.3	J	NA	
Calcium	NE		14,000		14,600		14,300		13,900		NA	
Iron	320	1000	25.2	U	25.2	U	78.1	J	25.2	U	NA	
Magnesium	NE		3,930	J	4,080	J	3,970	J	3,880	J	NA	
Manganese	14,500		25.3		48.4		50.2		33.9		NA	
Potassium	NE		2,860	J	2,990	J	2,990	J	2,890	J	NA	
Sodium	NE		12,000		12,600		12,500		12,200		NA	
Vanadium	NE		1.3	U	1.3	U	1.3	U	1.8	J	NA	
Wet Chemistry (MG/L)												
Hardness			54		54		56		54		NA	

Notes:
Shaded cell indicates exceedence of BTAG surface water screening criteria.
NA - not analyzed
NE - no criteria established
1 - EPA Region 3 Biological Technical Assisstance Group (BTAG) surface water criteria used to screen compounds in White Oak screening level ERA (TTNUS December 1999)
2 - Clean Water Act federal water quality critera used to refine selection of compounds of potential concern in the Step 3A ERA for White Oak (TTNUS, July 2000)

B - Blank contamination
J - Estimated
K - Biased high
R - Unusable

U - Undetected
UJ - Undetected, estimated limit
UL - Undetected, limit biased low

SECTION 8

Summary and Conclusions

Site 49 is that portion of NSWC–White Oak located at the eastern end of AEDC in the north-central portion of the facility. The site consists of the soil and groundwater in the vicinity and downgradient of Building 427. The site also includes Paint Branch from approximately 200 feet north of Perimeter Road Bridge to approximately 200 feet south of the Dahlgren Road bridge.

8.1 Objectives of the Remedial Investigation

The RI was conducted in response to the closure of NSWC–White Oak under the BRAC program. Specific objectives of the RI included:

- Characterize the nature and extent of groundwater contamination beneath Site 49;
- Evaluate whether the source of the Site 49 groundwater contamination originates upgradient of or from within the site;
- Evaluate the potential for Site 49 groundwater flow below Paint Branch;
- Identify and characterize the hydrogeologic factors affecting the transport of groundwater contamination in subsurface materials;
- Determine the potential for and quantify risks to human health based on exposure to soil, groundwater, and/or surface water at Site 49;

8.2 Physical Characteristics of Site 49

Site 49 is located at the eastern edge of the AEDC. The topography in this portion of NWSC-White Oak contains considerable relief. The western portions of Site 49, associated with AEDC, including Building 427, are relatively flat. The central and eastern portions of Site 49 include a steep-sided ravine formed by Paint Branch. The total elevation drop from west to east across Site 49 is approximately 100 feet.

Site 49 is located in the Atlantic Coastal Plain, near the Fall Line marking the western extent of the Atlantic Coastal Plain and the unconformable contact with the Piedmont Province bedrock units. The Atlantic Coastal plain is underlain by the metasedimentary Wissahickon Schist formation. The Wissahickon bedrock has been heavily weathered to forma mantle of saprolite The Atlantic Coastal Plain deposits include several formations composed of unconsolidated, interbedded clays, silts, sands, and gravels.

The hydrogeology of Site 49 is dominated by the saprolite-bedrock units. The Atlantic Coastal Plain sediments are present as a relatively thin veneer that is either unsaturated or has only a small saturated thickness. Groundwater is present as an unconfined water table aquifer in which the water table is located in the bedrock in the western portion of the Site

and in the saprolite in the eastern portion, approaching Paint Branch. Groundwater flows to the east in response to hydraulic gradients. In addition, there appears to be a string downward component of flow in the west and central portion of the site and an upward component of flow in the east, which likely supplies baseflow to Paint Branch.

8.3 Nature and Extent of Contamination

The primary contaminants found in the environment at Site 49 are chlorinated solvents (TCE and its likely degradation products, *cis*-1,2-DCE and VC) occurring in groundwater. Investigation of soil conditions and potential source areas found no significant sources for the TCE.

8.3.1 Soil Data Summary

- PCE was detected at very low concentrations in seven samples from three boring locations. Other VOCs were detected sporadically throughout the site and at very low concentrations.
- SVOCs were detected throughout the site at low concentrations. One boring, 459SB201, contained the greatest number of individual SVOCs and most of the maximum detected concentrations.
- Metals were detected in all soil samples. Each soil sample contained metals at concentrations that exceeded the 95 percent UCL for background. However, the variability in concentrations detected in Site 49 samples appears to be consistent with variability expected in natural soils, based on the background data set and regional-scale reference data sets.
- Two pesticides, 4,4'-DDT and dieldrin, were detected at low concentrations.
- Explosives and PCBs were not detected in any soil samples.

8.3.2 Groundwater Data Summary

- TCE and its breakdown products were detected throughout Site 49. Concentrations generally increase with distance from the postulated source near Building 427 and with depth. Concentrations exhibit mixed behavior with time, as concentrations in some horizons increased while other decreased during subsequent sampling events.
- SVOCs, pesticides, PCBs, explosives, and perchlorate were not detected at significant concentrations, nor with significant frequency. Accordingly, no anthropogenic influences from these chemicals appear to affect Site 49 groundwater quality.
- Metals were detected in both filtered and unfiltered samples of groundwater. The metals detected were consistent with those detected in soil, surface water, and with the expected geochemical signatures for natural groundwater in this environment. The concentrations of detected metals did not exceed the USEPA MCLs.
- The plume's boundary to the north has not been defined, as the navy had not received access rights to the Maryland National Capital Park and Planning Commission (MNCPPC) property at the time of the RI. Permission has since been granted to install a

well on this property, which will take place concurrent with the remedial design process.

8.3.3 Surface Water Summary

Surface water quality data from Paint Branch adjacent to Site 49 are consistent with the background data set discussed in the BIR and show no anthropogenic influences from Site 49. In addition, surface water geochemical data are similar to the inorganic geochemistry of groundwater at Site 49. The absence of detectable concentrations of the VOCs detected in Site 49 groundwater indicate that any groundwater contamination discharged to Paint Branch is a transient phenomenon that has no adverse effect on surface water quality.

8.4 Fate and Transport

The following conclusions regarding the fate and transport of contaminants at Site 49:

- One general source area has been identified in the vicinity of Building 427, likely at the former leaching well. Data collected during this investigation identified TCE and its degradation products at concentrations in the thousands of micrograms per liter in groundwater. This information, along with water-level data, confirms that TCE contamination originating from the presumed source area is migrating easterly, towards Paint Branch.
- It appears that a significant volume of mass has migrated from Building 427 to Paint Branch. The portion this volume represents relative to the total volume, is unknown because the initial mass is unknown. Further, the complexity of the flow system decreases the uniformity of the plume and limits the characterization process.
- Natural attenuation likely is occurring at Site 49; however, it is not considered significant, given the TCE concentrations observed in samples collected from wells located near Paint Branch, the relatively low detected concentrations of its breakdown products, and the complexity of the flow system.

8.5 Human Health Risk Assessment

This baseline risk assessment was conducted to evaluate the potential human health risks associated with the site-related activities for:

- surface water in Paint Branch, and
- bedrock groundwater.

Soil was not evaluated in the risk assessment because Site 49 was initially identified as a groundwater contamination site and during subsequent sampling, none of the COPCs in groundwater could be found in the soil. With the concurrence of the BCT for NSWC White Oak, potential risks associated with soil were not quantified. Furthermore, no discernable area of waste disposal has been identified in the soil at the site (based on site data and historic records searches) that can be attributed as the source of the VOCs found in groundwater.

Surface water data was screened against human health risk screening criteria, however no COPCs were retained for Paint Branch surface water, and, therefore, no unacceptable risks are associated with this medium.

Potential risks associated with bedrock groundwater were calculated for the following populations:

- future adult resident,
- future child resident,
- future lifetime resident, and
- future construction worker.

The risk assessment quantifies potential human health risks at Site 49 under current and future use scenarios assuming no remediation is implemented.

No COPCs were retained for Paint Branch surface water, and, therefore, no unacceptable risks are associated with this medium. The groundwater has carcinogenic risks and non-carcinogenic hazards greater than the USEPA target levels. The following receptors have total RME non-carcinogenic hazards or carcinogenic risks that exceeded USEPA's target levels:

- a future residential adult and child exposed to groundwater,
- a future construction worker exposed to groundwater.

The CT risks for the residential scenarios also exceeded USEPA target levels.

The majority of the risk from the groundwater is associated with TCE, *cis*-1,2-dichloroethylene, 1,2-dibromoethane (which was detected in only 1 of 16 groundwater samples), and vinyl chloride. PCE, chromium, iron, and manganese also contribute to the risks and hazards, but to a much lesser extent.

8.6 Ecological Risks

Risks to ecological receptors were not evaluated as part of this RI. The media affected at Site 49 is groundwater, for which there are no ecological receptors. The pathway for contaminant (chlorinated VOC) migration to the groundwater was, in all likelihood, through a leaching well or building sump, and therefore would not involve impacts to soil near the ground surface where risks to ecological receptors would be an issue. Ecological risks from the surface water and sediment in the section of Paint Branch potentially affected by Site 49 have already been evaluated in a separate base-wide Ecological Risk Assessment (ERA). The surface water data collected during the Site 49 RI were consistent with prior data collected at this same location and used in the base-wide ERA. No chlorinated VOCs or other site-related contaminants, with the exception of iron, were detected in the surface water, and iron as well as all of the non-site-related compounds detected in the surface water (other metals) were below either the White Oak-specific ecological screening criteria established for Paint Branch in the base-wide ERA.

SECTION 9

References

Air Force Institute for Environment, Safety, and Occupational Health Risk Analysis (AFIERA), December 2001. *Critique of the U.S. Environmental Protection Agency's Draft Trichloroethylene Health Risk Assessment (EPA/600/P-01/002A)*

Brown & Root Environmental, June 1998. *Master Work Plans for the Former Naval Surface Warfare Center, White Oak, Silver Spring, Maryland.*

CH2M HILL, October 2001. *Draft Site Screening Report for White Oak Sanitary Sewer Lines (SWMU 46) and the WSSC Sanitary Sewer Lines Through the Former NSWC–White Oak Facility, Including Phase I and Phase II Sampling, Former NSWC–White Oak, Silver Spring Maryland.*

Department of the Navy, November, 1984. *Initial assessment Study of Naval Surface Weapons Center, White Oak Laboratory, Silver Spring, Maryland.*

Department of the Navy, 1998. *Draft Base Realignment and Closure Cleanup Plan (BCP) for Former Naval Surface Warfare Center, Dahlgren Division White Oak Detachment.* July

Domenico, P.A., and Schwartz, F.W., 1998. *Physical and Chemical Hydrogeology.* Second edition. John Wiley & Sons, Inc., New York.

Froelich, A.J., 1975. *Bedrock Map of Montgomery County, Maryland*

Halliburton NUS Corporation, June 1995. *Design Verification Report for Remedial Actions at Site 2, 3, 4, and 9. Naval Surface Warfare Center, White Oak.*

Howard, P.H., Boethling, R.S., Jarvis, W.F., Meylan, W.M., and Michalenko, E.M., 1991 *Handbook of Environmental Degradation Rates.* Lewis Publishers Inc., Michigan.

Kearney/Centaur Division, November 1990. *Phase II RCRA Facility Assessment of the Naval Surface Warfare Center, White Oak Laboratory, Silver Spring, Maryland.*

Malcolm Pirnie, Inc., April 1987. *NACIP Program Confirmation Study, Verification Phase, Naval Surface Weapons Center, White Oak, Maryland.*

Malcolm Pirnie, Inc., March 1993. *Feasibility Study Report, Dahlgren Division Detachment, White Oak, Silver Spring, Maryland.*

Malcolm Pirnie, Inc., October 1992. *Remedial Investigation Report, Dahlgren Division Detachment, White Oak, Silver Spring, Maryland.*

Maryland Geological Survey, 1964. *The Geology of Howard and Montgomery Counties*

McFarland, E.R. 1995. *Ground-Water Flow, Geochemistry, and Effects of Agricultural Practices on Nitrogen Transport at Study Sites in the Piedmont and Coastal Plain Physiographic Provinces, Patuxent River Basin, Maryland.* U.S. Geological Survey Open-File Report 94-507.

McFarland, E.R., 1999. *Hydrogeologic Framework and Ground-Water Flow in the Fall Zone of Virginia,* USGS, Water Resources Investigations Report 99-4093.

Naval Energy and Environmental Support Activity (NEESA), November 1984. *Initial Assessment Study of Naval Surface Weapons Center, White Oak Laboratory. NEESA 13-050.*

Richardson, C.A., 1982. *Ground Water in the Piedmont Upland of Central Maryland,* USGS, Geological Survey Water-Supply Paper 2077.

Thornthwaite, C.W., and J.R. Mather. 1957. *Instructions and Tables for Computing Potential Evapotranspiration and the Water Balance.* Drexel Institute of Technology, Laboratory of Climatology, Centertown, New Jersey.

TtNUS, Inc., April 2000. *Addendum, Rounds 1, 2, 3, & 4 Groundwater Data, RCRA Facility Investigation for Sites 2, 3, 4, 7, 8, 9, Naval Surface Warfare Center, White Oak, Silver Spring, Maryland.* Prepared by Tetra Tech NUS, Inc.

TtNUS, Inc., August 1998. *Work Plan for RCRA Facility Investigation and Corrective Measures Study, Naval Surface Warfare Center, White Oak, Silver Spring Maryland, Sites 2, 3, 4, 7, 8, 9, and 11.* Prepared by Tetra Tech NUS, Inc.

TtNUS, Inc., December 1998a. *Engineering Evaluation/Cost Analysis (EE/CA) for Site 46, Former Naval Surface Warfare Center, White Oak, Maryland.* Prepared by Tetra Tech NUS, Inc.

TtNUS, Inc., December 1998b. *Background Investigation Report, Former Naval Surface Warfare Center, White Oak.* Prepared by Tetra Tech NUS, Inc.

TtNUS, Inc., December 1998c. *Site Screening Report for IRP Sites 1, 5, 6, 12, 13, 28, 29, 31, 32, and 33, EBS AOC 100, Former Naval Surface Warfare Center, White Oak.* Prepared by Tetra Tech NUS, Inc.

TtNUS, Inc., January 1999 (Draft). *Basis of Design Report for Centrifuge Groundwater Extraction/Treatment System, Former Naval Surface Warfare Center, White Oak.* Prepared by Tetra Tech NUS, Inc.

TtNUS, Inc., March 1999. *Work Plans for Site Screening at Area of Concern 2, Former Naval Surface Warfare Center, White Oak, Silver Spring, Maryland.* Prepared by Tetra Tech NUS, Inc.

TtNUS, Inc., May 2000. *Field Investigation Report for Explosives Contamination Investigation for the Former Naval Surface Warfare Center, White Oak, Silver Spring, Maryland.* Prepared by Tetra Tech NUS, Inc.

TtNUS, Inc., November 1998. *Site Investigation Report for Site 46, Naval Surface Warfare Center, White Oak, Maryland.* Prepared by Tetra Tech NUS, Inc.

TtNUS, Inc., October 1999. *Draft Basewide Screening Level Ecological Risk Assessment, Naval Surface Warfare Center, White Oak, Silver Spring, Maryland.* Prepared by Tetra Tech NUS, Inc.

TtNUS, Inc., September 1999a. *Draft RCRA Facility Investigation for Sites 2, 3, 4, 7, 8, 9, and Paint Branch, Naval Surface Warfare Center, White Oak, Silver Spring, Maryland.* Prepared by Tetra Tech NUS, Inc.

TtNUS, Inc., September 1999b. *Site Screening Report for Area of Concern 2, former Naval Surface Warfare Center, White Oak, Silver Spring, Maryland.* Prepared by Tetra Tech NUS, Inc.

Appendix A
Leaching Well Excavation Photographs

APPENDIX A

Leaching Well Excavation Photographs

Site preparation (Building 427 in the background)

Breaking ground

Leaching well (note: there was no cover)

Removing fill from the leaching well

Leaching well

The leaching well fully excavated

Back filling (note plastic installed to define the extent of excavation)

Backfilling (note plastic casing for well installation)

Leaching well

Compacting the backfill

Regrading the site

Seeding and haying

Washing the road

Post excavation

Appendix B
Building 427 Photographs

APPENDIX B

Building 427 Photographs

The sump located in the subbasement

Sealed floor in subbasement (note space between sections of floor)

Floor-wall contact in subbasement (note water at conact)

Oil staining on wall and floor in subbasement

Iron staining on wall in subbasement

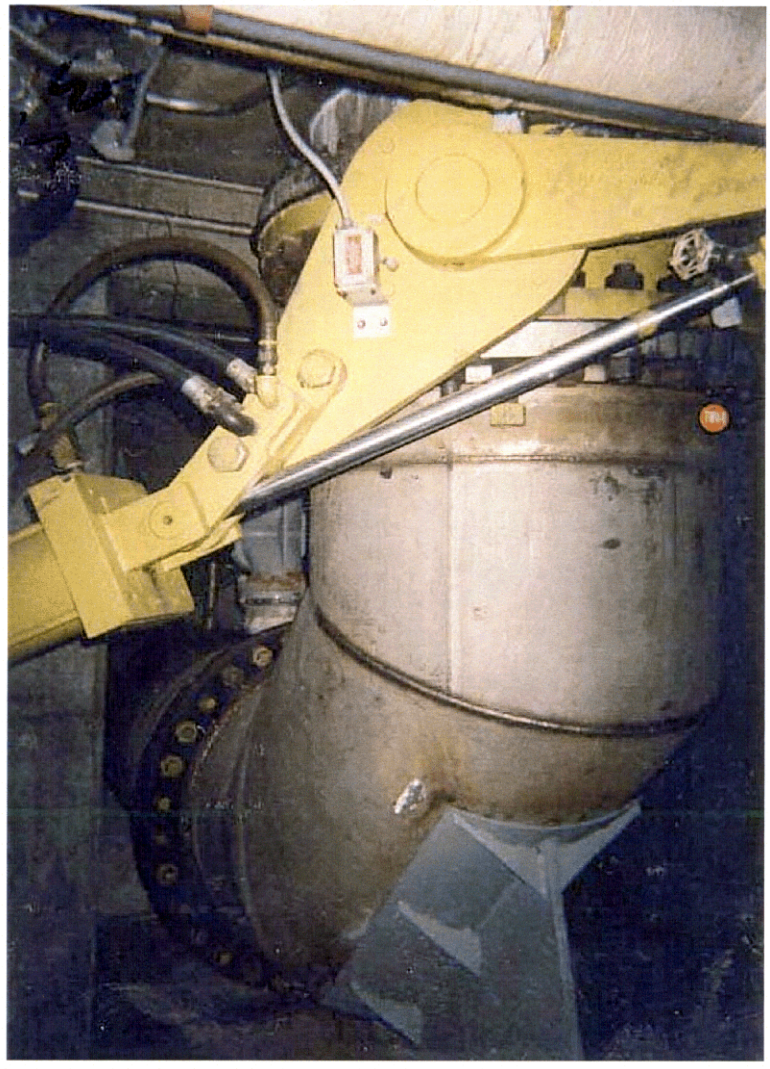

Discharge line from tank on the 000 level

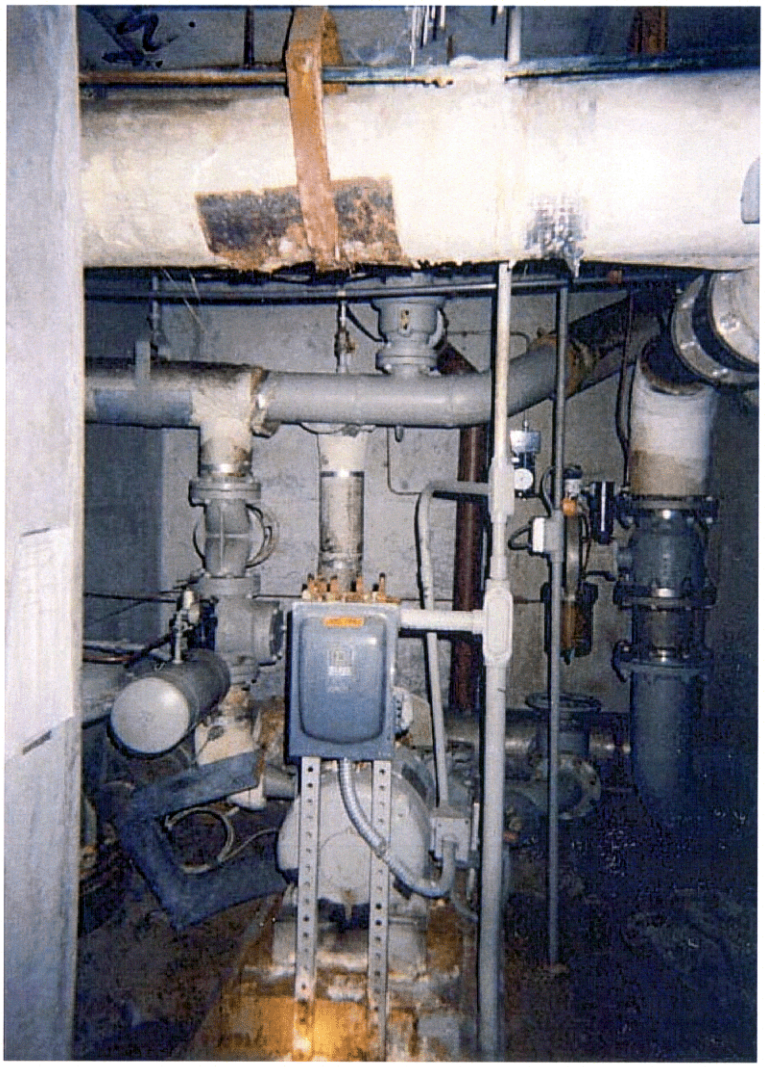

Pump room next to discharge line on 000 level

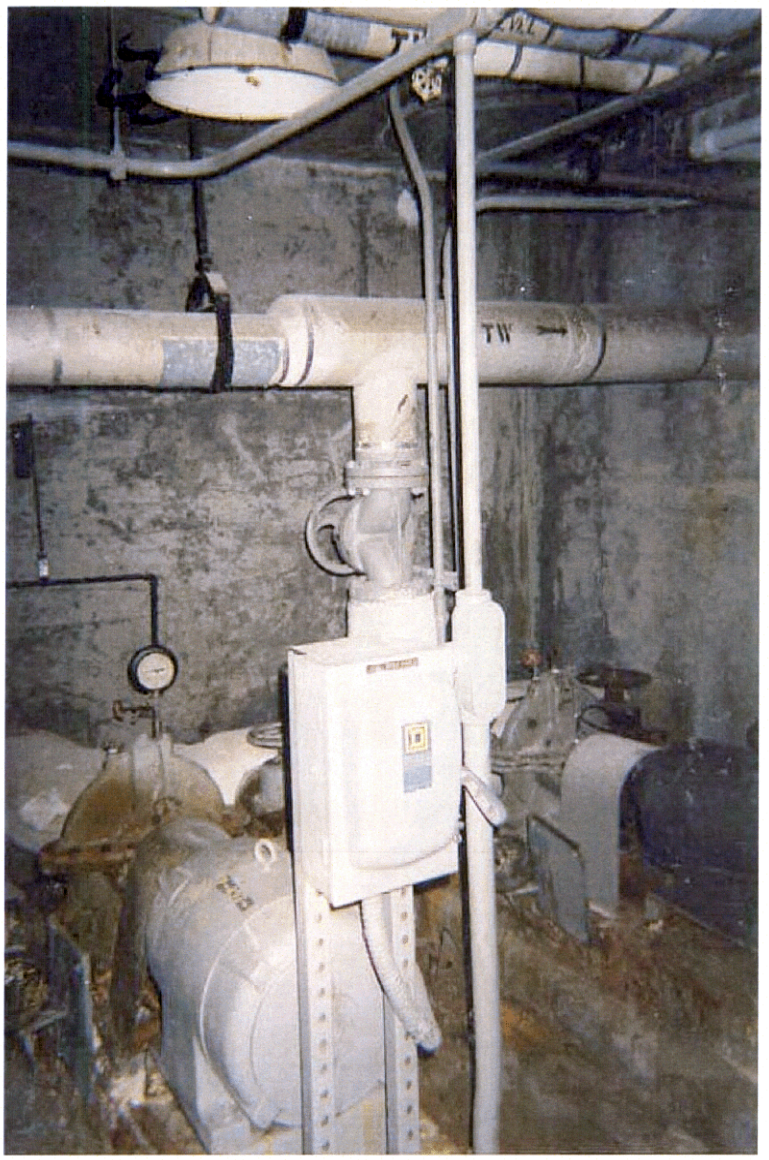

Second pump room on 000 level

Floor drain on 000 level

Sump on 100 level (note sump is full)

Process machinery on 100 level

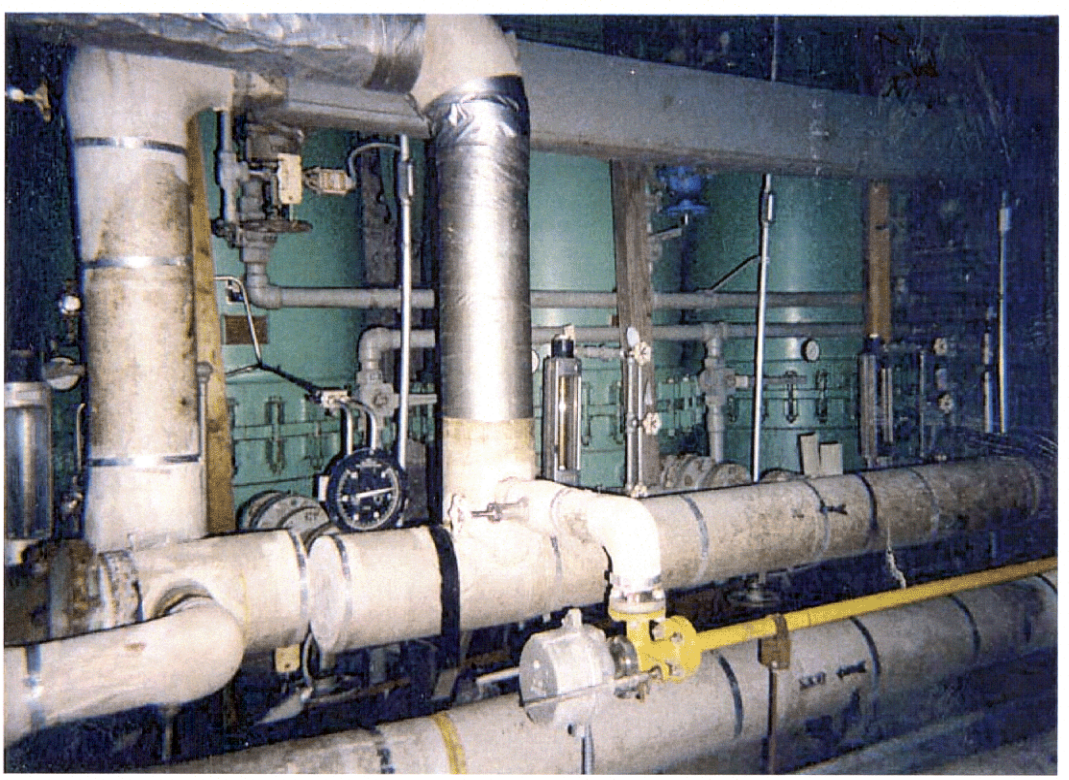

Large tanks and piping used in building processes on 100 level

Empty process sump on 100 level

Chemical cabinet on 100 level

Half full used oil drum on 100 level

Old tank on 100 level

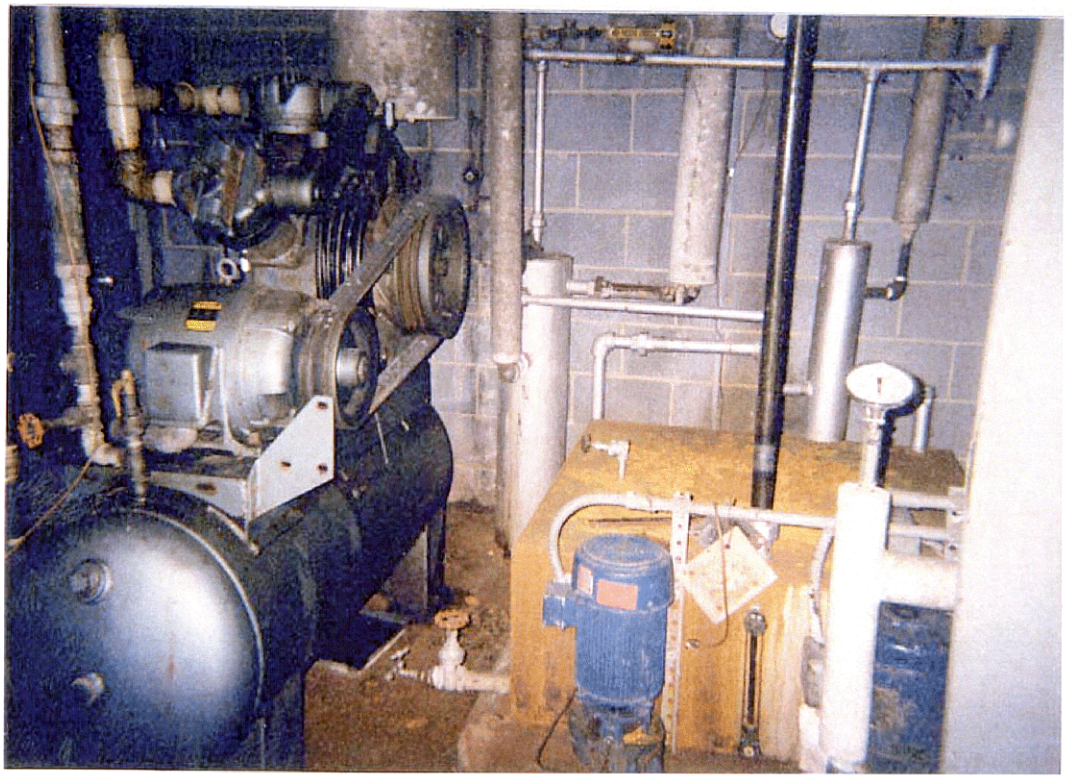

Tanks on 100 level (likely hydraulic oil)

Chemical cabinet on 100 level
(note 2 5-gallon containers with material noted as 'dry-cleaning solvent'

Unknown chemical (powder) on 100 level

Room on 100 level with placards

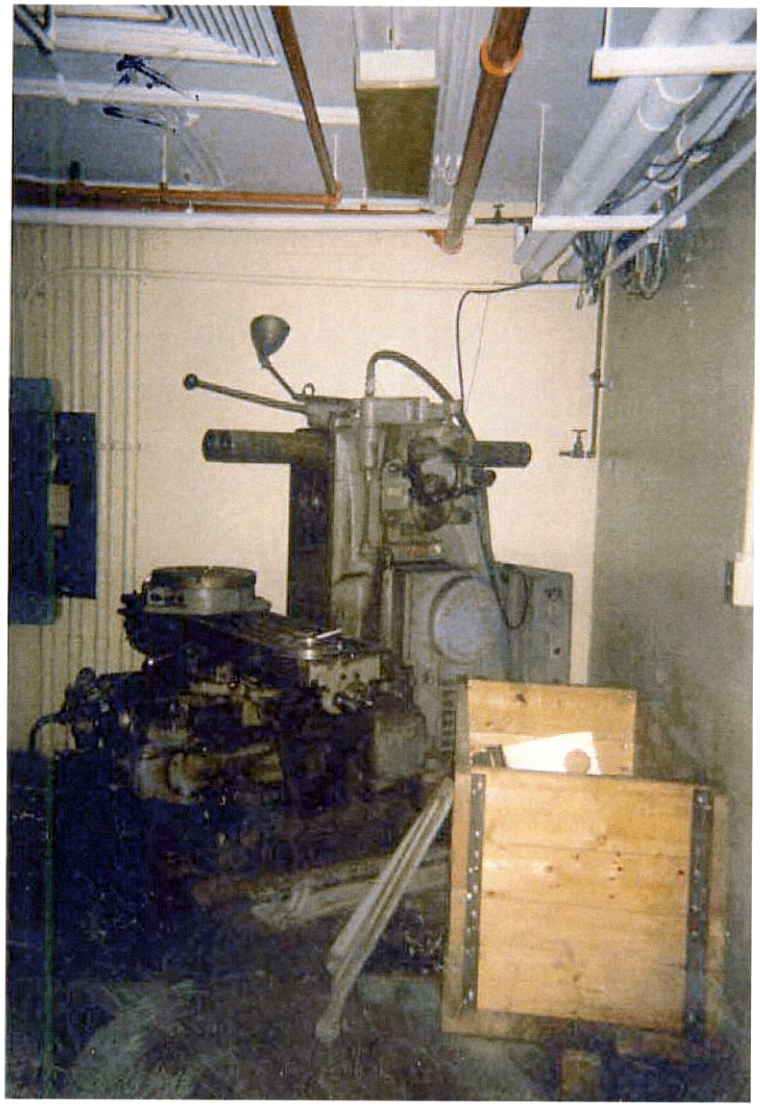

Abandoned lathe on 100 level

Appendix C
Building 427 Architectural and Construction Drawings

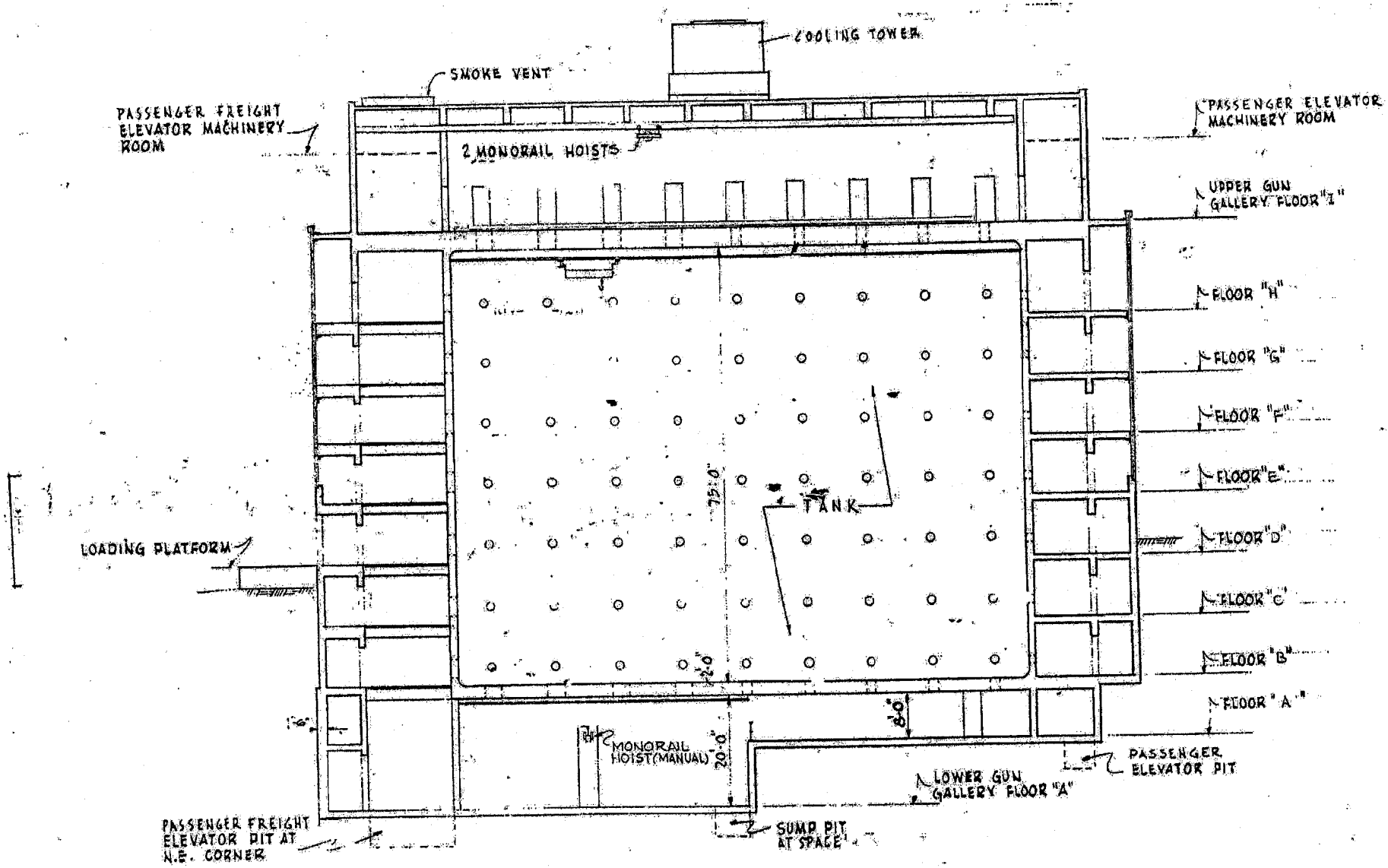

SECTION
(LOOKING EAST)

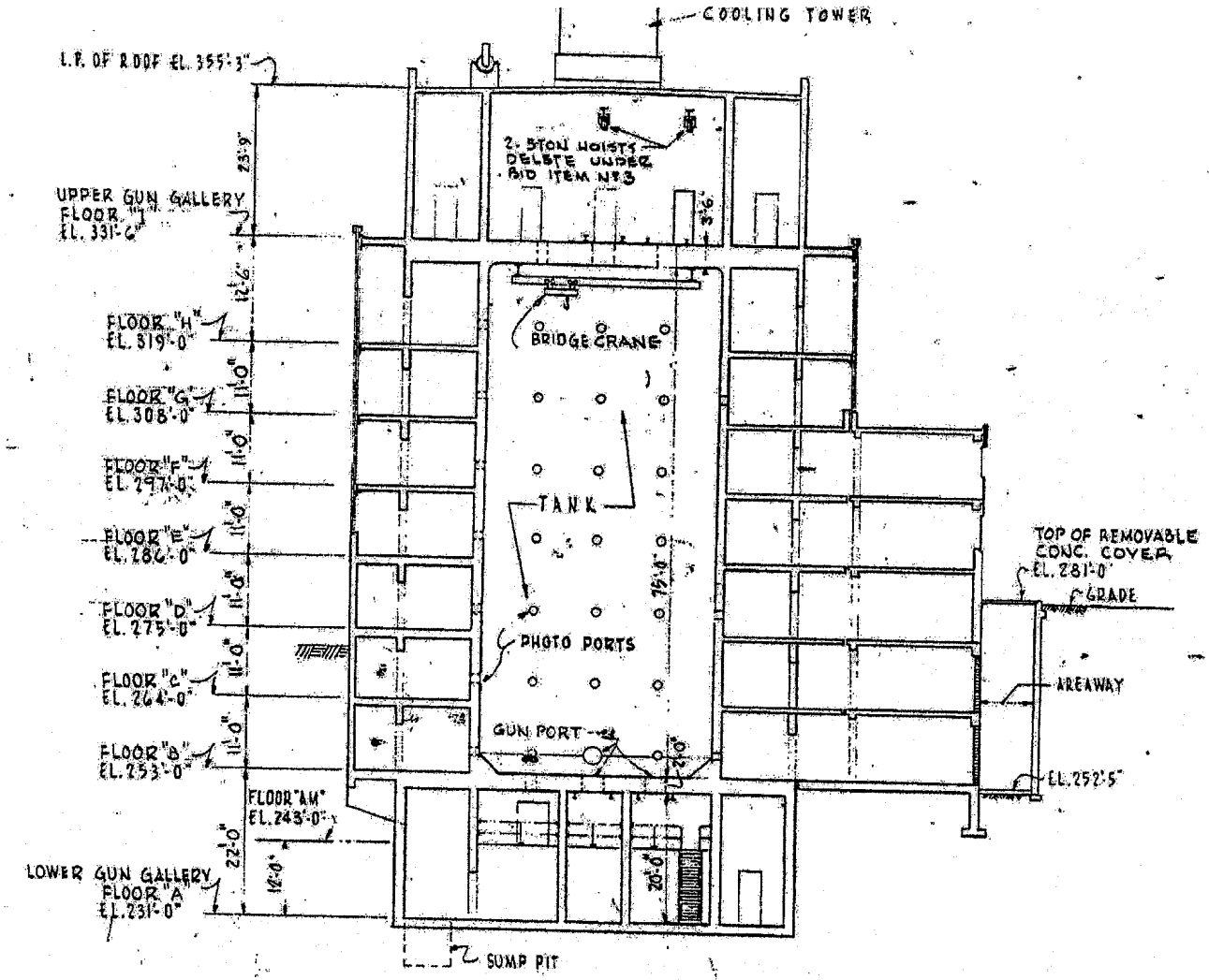

SECTION
(LOOKING SOUTH)

GRAPHIC SCALE

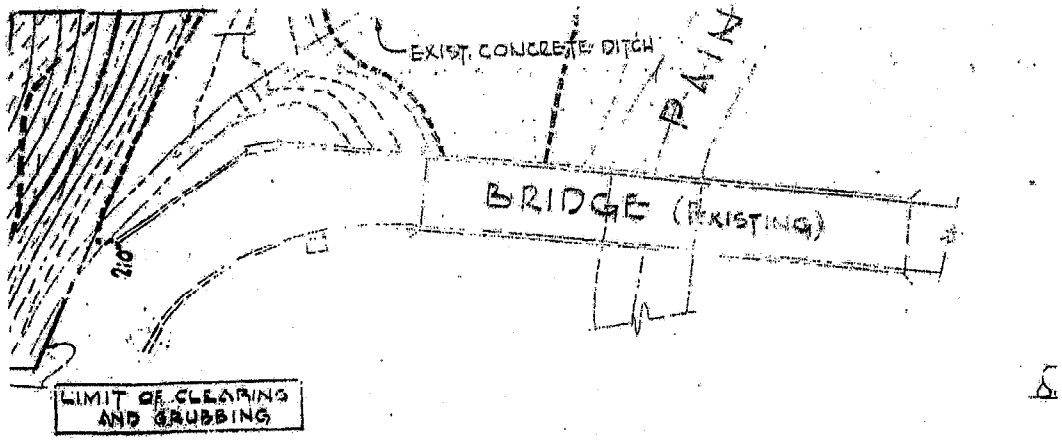

INV. EL. 237.0

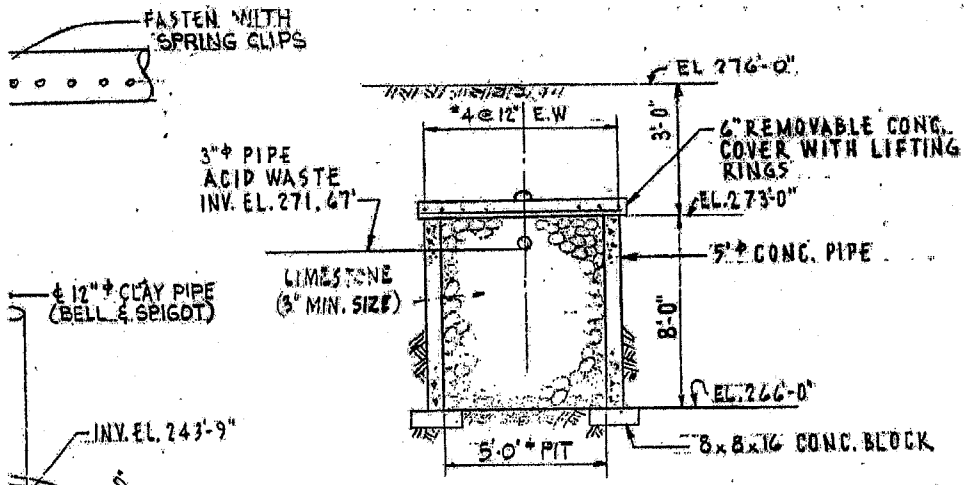

LIMESTONE PIT DETAIL

SCALE: NONE

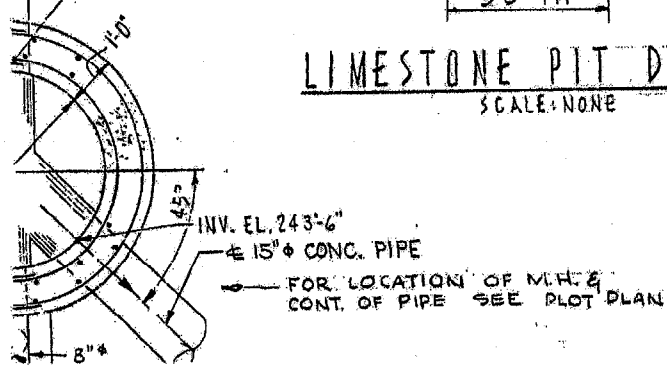

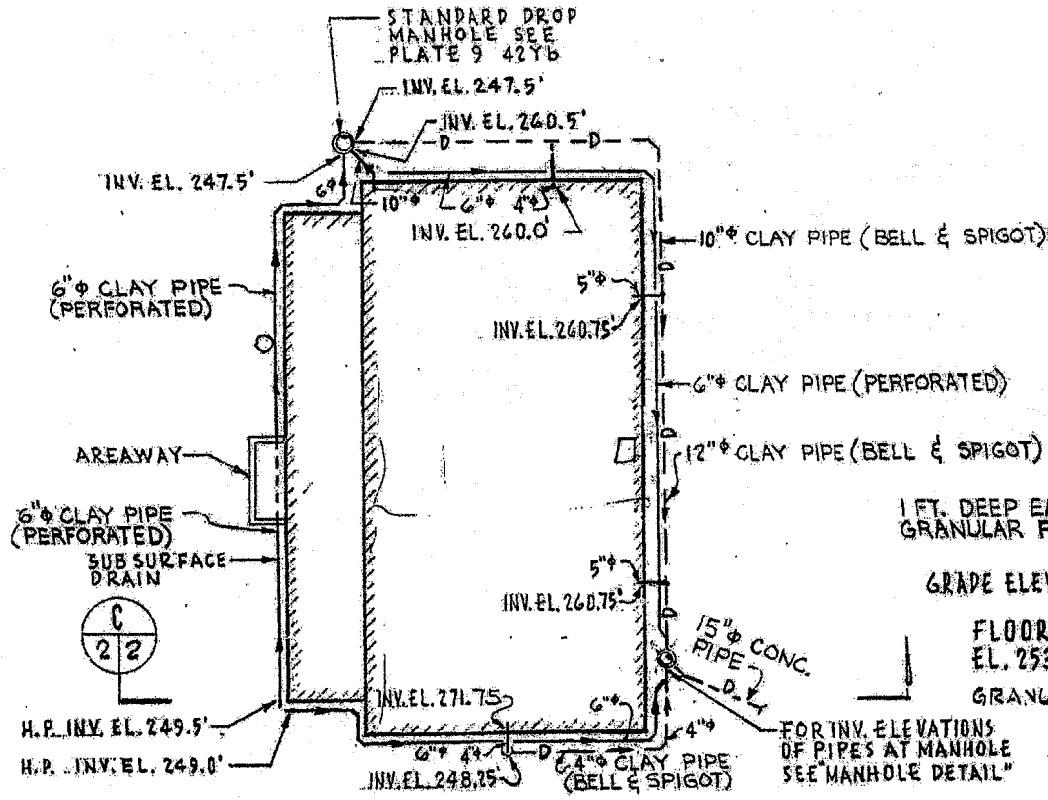

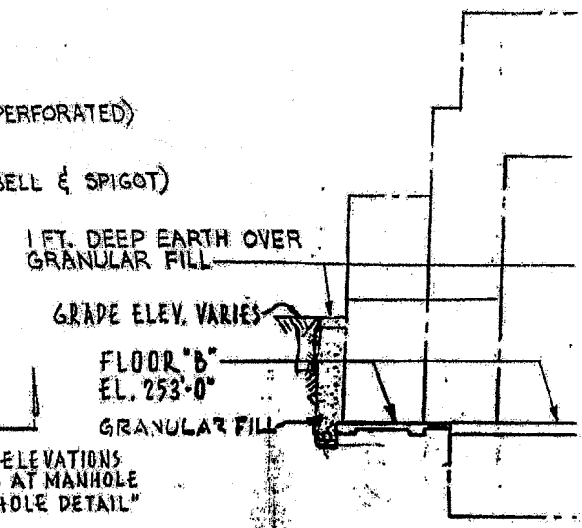

PLAN

STORM & SUBSURFACE DRAINS

SCALE 1"=40'-0"

B1

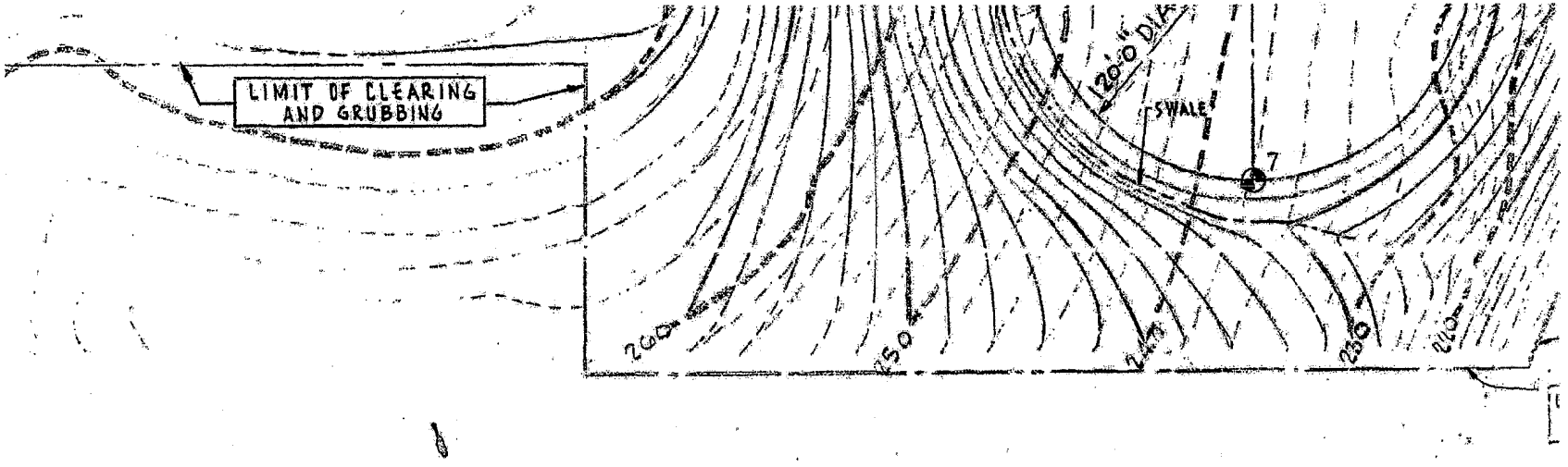

PLOT PLAN

SCALE: 1" = 40'

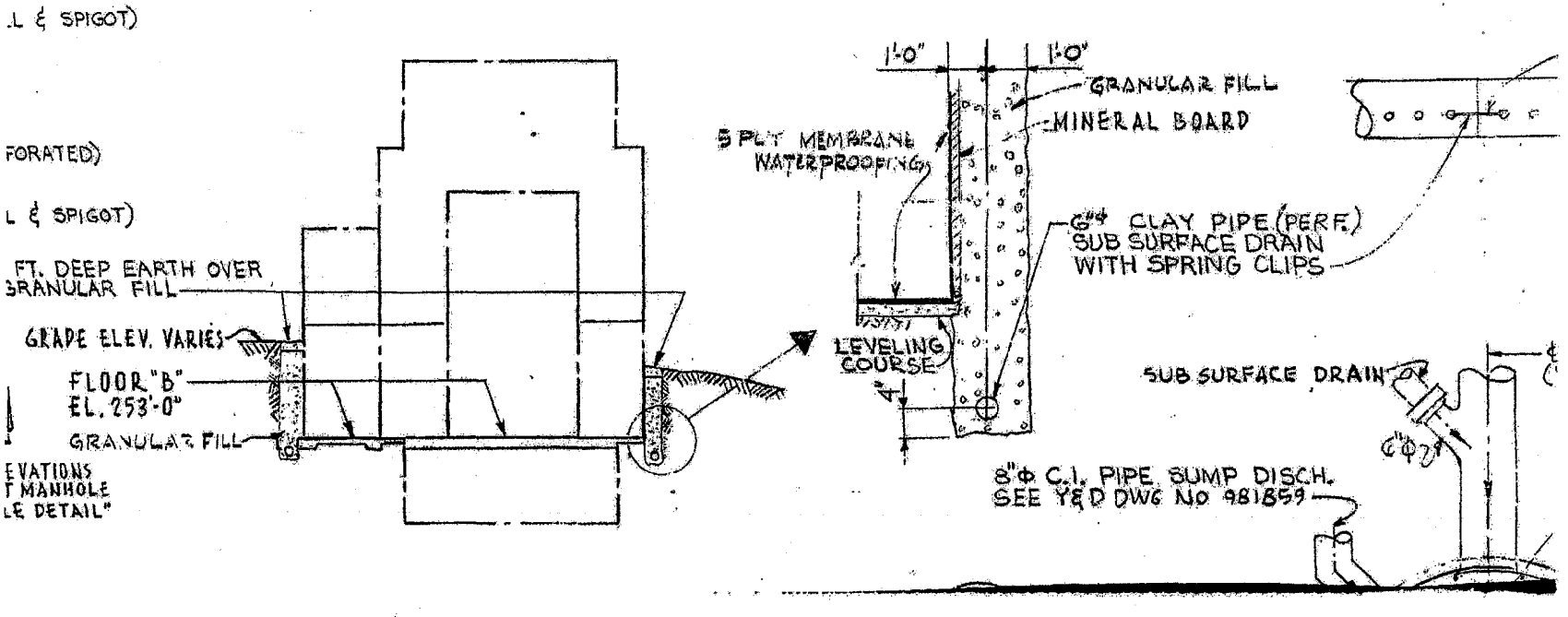

Appendix D
Boring Logs

CH2MHILL

PROJECT NUMBER	BORING NUMBER
149208	49GW201DD

SOIL BORING LOG

PROJECT : White Oak — LOCATION : Silver Spring, Maryland

ELEVATION : — DRILLING CONTRACTOR : Parratt Wolff

DRILLING METHOD AND EQUIPMENT USED : Hollow Stem Auger & may also be mud rotary, air rotary, or combination

WATER LEVELS : — START : 11/19/2002 — END : 11/23/02 — GEOLOGIST : C. Haupfleisch

DEPTH BELOW SURFACE (FT)	INTERVAL (FT)	RECOVERY (IN)	#/TYPE	CORE RUN/ LENGTH/ RECOVERY % RESULTS ft-ft-% (N)	SOIL DESCRIPTION: SOIL NAME, USCS GROUP SYMBOL, COLOR, MOISTURE CONTENT, RELATIVE DENSITY, OR CONSISTENCY SOIL STRUCTURE, MINERALOGY	COMMENTS: DEPTH OF CASING, DRILLING RATE, DRILLING FLUID LOSS, TESTS, AND INSTRUMENTATION. OVM (ppm): Breathing Zone Above Hole
0						
5						
10						
15						
	16	36	1	*3-3-85 46	Quartzite; lite olive gray with mica; 16.0-16.5' abundant k-feldspar and plagioclase and about 0.5 -1" quartzite fine-medium grained; slight to moderate weathering; hard to very hard; avg. joint spacing, close; massive; red Fe staining in fractures.	Drill rate: 4 min/foot
20	19.5	60	2	5-5-100 62	Garnet schist; dark olive gray' abundant mica (biotite anc phlogolite), quartz, some garnet; fine-medieum grained; slightly weathered; medium hardness.	Drill rate: 3 min/foot
25	24.5	60	3	5-5-100 60	Same as above, about 28.5 - 29.5 bgs moderate to highly weathered zone (micas weathering to clay, deep orange staining throughout core, some black staining, fracture surfaces highly weathered); average joint spacing close (1.4 fractures/ft)	Drill rate: 3 min/foot Driller reports loss of about 350 gallons of water from about 16.0 - 29.5' bgs.

CH2MHILL

PROJECT NUMBER	BORING NUMBER
149208	49GW201DD

SOIL BORING LOG

PROJECT : White Oak — LOCATION : Silver Spring, Maryland

ELEVATION : — DRILLING CONTRACTOR : Parratt Wolff

DRILLING METHOD AND EQUIPMENT USED : Hollow Stem Auger & may also be mud rotary, air rotary, or combination

WATER LEVELS : — START : 11/19/2002 — END : 11/23/02 — GEOLOGIST : C. Haupfleisch

DEPTH BELOW SURFACE (FT)	INTERVAL (FT)	RECOVERY (IN)	#/TYPE	CORE RUN/ LENGTH/ RECOVERY % RESULTS ft-ft-% (N)	SOIL DESCRIPTION: SOIL NAME, USCS GROUP SYMBOL, COLOR, MOISTURE CONTENT, RELATIVE DENSITY, OR CONSISTENCY SOIL STRUCTURE, MINERALOGY	COMMENTS: DEPTH OF CASING, DRILLING RATE, DRILLING FLUID LOSS, TESTS, AND INSTRUMENTATION. OVM (ppm): Breathing Zone Above Hole
30	29.5	60	4	5-5-100 88	Same as type #4 above 29.5-30' bgs. Moderately weathered zone (some micas weathered zone weathering to clay, stain penetrates most of core reddish orange staining (Fe) along fractures. Fracture surfaces highly weathered) slightly increased garnet abundance. Average joint spacing moderately close (0.6) joints/foot).	Drill rate: 3 min/foot
35	34.5	60	5	5-5-100 91	Same as type #2 above (0.8 joints/foot), slight increase in garnet abundance.	Drill rate: 3 min/foot
40	39.5	60	6	5-5-100 86	Same as above	Drill rate: 3 min/foot
45	44.5	60	7	5-5-100 83	Same as above, more coarse garnets (larger), increased schistosity (alignment), some pyright on fracture surfaces. (1.0 joint/foot)	Drill rate: 3 min/foot
50	49.5	60	8	5-5-100 88	Same as type #2 above, slightly weathered fracture surfaces (0.8 Fractures/foot).	Drill rate: 3 min/foot
55	54.5	60	9	5-5-100	Same as above, slightly weathered fractures, trace pyrite on	Drill rate: 3 min/foot

CH2MHILL

PROJECT NUMBER	BORING NUMBER
149208	49GW201DD

SOIL BORING LOG

PROJECT : White Oak — LOCATION : Silver Spring, Maryland

ELEVATION : — DRILLING CONTRACTOR : Parratt Wolff

DRILLING METHOD AND EQUIPMENT USED : Hollow Stem Auger & may also be mud rotary, air rotary, or combination

WATER LEVELS : — START : 11/19/2002 — END : 11/23/02 — GEOLOGIST : C. Haupfleisch

DEPTH BELOW SURFACE (FT)	INTERVAL (FT)	RECOVERY (IN)	#/TYPE	CORE RUN/ LENGTH/ RECOVERY % RESULTS ft-ft-% (N)	SOIL DESCRIPTION: SOIL NAME, USCS GROUP SYMBOL, COLOR, MOISTURE CONTENT, RELATIVE DENSITY, OR CONSISTENCY SOIL STRUCTURE, MINERALOGY	COMMENTS: DEPTH OF CASING, DRILLING RATE, DRILLING FLUID LOSS, TESTS, AND INSTRUMENTATION. OVM (ppm): Breathing Zone Above Hole
				100	fracture surface, widely spaced fractures (0.4 fractures/foot).	Collect 49PT201DD4860 Packer test sample at 48-60' bgs.
60	59.5	60	10	5-5-100 83	Same as type #7 above. Increased schistosity at 60-61' bgs and 61.2-62.6 bgs. Evidence of slickensides on some of the fractures at 61-62'bgs. (0.8 fractures per foot)	Drill rate: 2.5 min/foot
65	64.5	60	11	5-5-100 90	Same as type #2 above, 0.6 fractures per foot	Drill rate: 2.5 min/foot
70	69.5	60	12	5-5-100 91	Same as above, 0.4 fractures per foot, widely spaced fractures.	Drill rate: 2.5 min/foot Collect 49PT201DD6780 Packer test sample at 67-80'bgs
75	74.5	60	13	5-5-100 98	Same as above, 0.2 fractures/foot. Pyrite formation and weathering on fracture surface.	Drill rate: 3 min/foot
80	79.5	60	14	4.3-4.2-98 80	Same as above, Slickenslides on vertical fracture (83.9' bgs) 0.6 fractures/foot	Drill rate: 3 min/foot
85	84.3	60	15	5-5-100 66	Same as above, slickenslides on vertical fractures at 86.3-86.7 bgs., closely spaced fractures (1.6 fractures /foot)	Drill rate: 3 min/foot

CH2MHILL

PROJECT NUMBER	BORING NUMBER
149208	49GW201DD

SOIL BORING LOG

PROJECT : White Oak — LOCATION : Silver Spring, Maryland

ELEVATION : — DRILLING CONTRACTOR : Parratt Wolff

DRILLING METHOD AND EQUIPMENT USED : Hollow Stem Auger & may also be mud rotary, air rotary, or combination

WATER LEVELS : — START : 11/19/2002 — END : 11/23/02 — GEOLOGIST : C. Haupfleisch

DEPTH BELOW SURFACE (FT)	INTERVAL (FT)	RECOVERY (IN)	#/TYPE	CORE RUN/ LENGTH/ RECOVERY % RESULTS ft-ft-% (N)	SOIL DESCRIPTION: SOIL NAME, USCS GROUP SYMBOL, COLOR, MOISTURE CONTENT, RELATIVE DENSITY, OR CONSISTENCY SOIL STRUCTURE, MINERALOGY	COMMENTS: DEPTH OF CASING, DRILLING RATE, DRILLING FLUID LOSS, TESTS, AND INSTRUMENTATION. OVM (ppm): Breathing Zone Above Hole
90	89.3	60	16	5-5-100 66	Same as above, No slickenslide formations, fractures widely spaced, 0.6 fractures/foot	Drill rate: 3 min/foot
95	94.3	60	17	5-5-100 93	Same as above. Mica cone at 95.8' bgs. Fractures trace pyrite and clay coating along fracture surface at 89.7' bgs.	Drill rate: 3 min/foot
100	99.3				End of boring at 99.3' bgs	

CH2MHILL

PROJECT NUMBER	BORING NUMBER	
149208	49SS200	SHEET 1 OF 1

SOIL BORING LOG

PROJECT : White Oak — LOCATION : Silver Spring, Maryland

ELEVATION : — DRILLING CONTRACTOR : Parratt Wolff

DRILLING METHOD AND EQUIPMENT USED : Hollow Stem Auger & may also be mud rotary, air rotary, or combination

WATER LEVELS : — START : 07/09/2002 — END : 07/09/02 — GEOLOGIST : D. Steckler

DEPTH BELOW SURFACE (FT)	INTERVAL (FT)	RECOVERY (IN)	#/TYPE	CORE RUN/ LENGTH/ RECOVERY % RESULTS ft-ft-% (N)	SOIL DESCRIPTION: SOIL NAME, USCS GROUP SYMBOL, COLOR, MOISTURE CONTENT, RELATIVE DENSITY, OR CONSISTENCY SOIL STRUCTURE, MINERALOGY	COMMENTS: DEPTH OF CASING, DRILLING RATE, DRILLING FLUID LOSS, TESTS, AND INSTRUMENTATION. OVM (ppm): Breathing Zone Above Hole
0						
	2	12	1	4-8-11-11 19	Light brown sand with cobbles. Some clay and silt, loose, dry	OVM >2000
5	4	12	2	4-6-11-13 17	4-5 feet is same as above (may be slough). 5-6 feet saprolite. Brown silty clay with micas. Stiff, moist.	OVM = 350
	6	18	3	6-5-5-6 10	Saprolite, same as above. Becomes light gray at 8 feet	OVM = 145
	8	22	4	7-3-3-7 6	Saprolite is light gray, same as above.	OVM = 1
10	10	14	5	10-10-7-12 17	Same as above. Becomes very stiff at bottom.	OVM = 0
	12	24	6	12-30-32-36 62	12-12.5 feet is light gray saprolite with orange iron staining 12.5-13 feet is very light gray saprolite, less micas, some quartz gravels, may be gneissic. 13-13.5 feet is orange saprolite with black nodules. 13.5-14 feet is gneissic saprolite.	OVM = 0
15	14				End of boring.	
20						

CH2MHILL

PROJECT NUMBER	BORING NUMBER	
149208	49SS201	SHEET 1 OF 1

SOIL BORING LOG

PROJECT : White Oak — LOCATION : Silver Spring, Maryland

ELEVATION : — DRILLING CONTRACTOR : Parratt Wolff

DRILLING METHOD AND EQUIPMENT USED : Hollow Stem Auger & may also be mud rotary, air rotary, or combination

WATER LEVELS : — START : 07/09/2002 — END : 07/09/02 — GEOLOGIST : D. Steckler

DEPTH BELOW SURFACE (FT)	INTERVAL (FT)	RECOVERY (IN)	#/TYPE	CORE RUN/ LENGTH/ RECOVERY % RESULTS ft-ft-% (N)	SOIL DESCRIPTION: SOIL NAME, USCS GROUP SYMBOL, COLOR, MOISTURE CONTENT, RELATIVE DENSITY, OR CONSISTENCY SOIL STRUCTURE, MINERALOGY	COMMENTS: DEPTH OF CASING, DRILLING RATE, DRILLING FLUID LOSS, TESTS, AND INSTRUMENTATION. OVM (ppm): Breathing Zone Above Hole
0						
	2	3	1	10-20-31-50 51	Fill: Concrete with loose brown sand.	OVM = 140
5	4	3	2	(50) 3	Brown silty clay with some micas	OVM > 2000
	6	3	3	(50) 2	Slough	OVM > 2000
10						
15						
20						

CH2MHILL

PROJECT NUMBER	BORING NUMBER	
149208	49SS202	SHEET 1 OF 1

SOIL BORING LOG

PROJECT : White Oak — LOCATION : Silver Spring, Maryland

ELEVATION : — DRILLING CONTRACTOR : Parratt Wolff

DRILLING METHOD AND EQUIPMENT USED : Hollow Stem Auger & may also be mud rotary, air rotary, or combination

WATER LEVELS : — START : 07/10/2002 — END : 07/10/02 — GEOLOGIST : D. Steckler

DEPTH BELOW SURFACE (FT)	INTERVAL (FT)	RECOVERY (IN)	#/TYPE	CORE RUN/ LENGTH/ RECOVERY % RESULTS ft-ft-% (N)	SOIL DESCRIPTION: SOIL NAME, USCS GROUP SYMBOL, COLOR, MOISTURE CONTENT, RELATIVE DENSITY, OR CONSISTENCY SOIL STRUCTURE, MINERALOGY	COMMENTS: DEPTH OF CASING, DRILLING RATE, DRILLING FLUID LOSS, TESTS, AND INSTRUMENTATION. OVM (ppm): Breathing Zone Above Hole
0						
	2	4	1	9-11-11-12 22	Brown silty sand with micas, stiff, damp.	OVM = 300
5	4	18	2	5-6-10-10 16	4-5.5 feet is same as above. 5.5-6 feet is "salt and pepper" saprolite gneissic	OVM = 25
	6	3	3	8-11-9-6 20	Same as above, increased micas. Some garnets - schisotse	OVM = 0
	8	20	4	5-8-16-20 24	Orange (iron stained) saprolite, stiff, damp.	OVM = 0
10	10		5	15-50 6	Same as above, very stiff.	
	12				End of boring	
15						
20						

Appendix E
Well Completion Diagrams

PROJECT NUMBER	WELL NUMBER		
149208	49GW206D	SHEET 1	OF 1

CH2MHILL

WELL COMPLETION DIAGRAM

PROJECT : NSWC-White Oak

LOCATION : Silver Spring, Maryland

DRILLING METHOD AND EQUIPMENT USED : HSA and Percussion

DRILLING CONTRACTOR : Parratt Wolff START : 12/18/2002 END : 12/18/2002 GEOLOGIST : D. Steckler

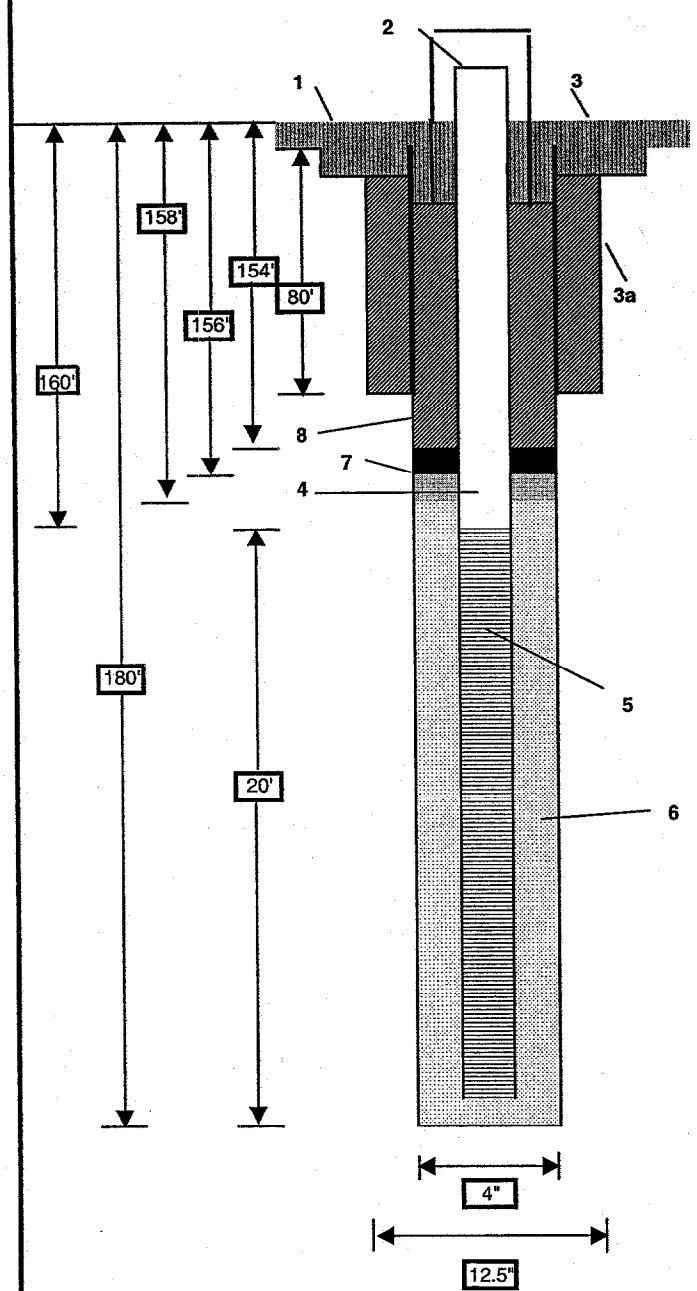

1- Ground elevation at well _____

2- Top of casing elevation _____

3- Wellhead protection cover type Sick-up
   a) Dia./type of outer surface casing 4" Steel
   b) concrete pad dimensions 2' x 2'

4- Dia./type of inner well casing 2" I.D. Sch 40 PVC

5- Type/slot size of screen 2" PVC Screen (.010 mm)

6- Type screen filter #2 Sand

7- Type of seal Bentonite seal, #1 Sand
   a) Quantity used _____

8- Grout
   a) Grout mix used 1 bag Portland + 5 lbs bentonite per 8 gal water
   b) Method of placement Tremmie pipe

PROJECT NUMBER	WELL NUMBER		
149208	49GW206M	SHEET 1	OF 1

CH2MHILL

WELL COMPLETION DIAGRAM

PROJECT : White Oak

LOCATION : Silver Spring, Maryland

DRILLING METHOD AND EQUIPMENT USED : HSA

DRILLING CONTRACTOR : Parratt Wolff START : 11/25/02 END : 11/25/02 GEOLOGIST : C. Hauptfleisch

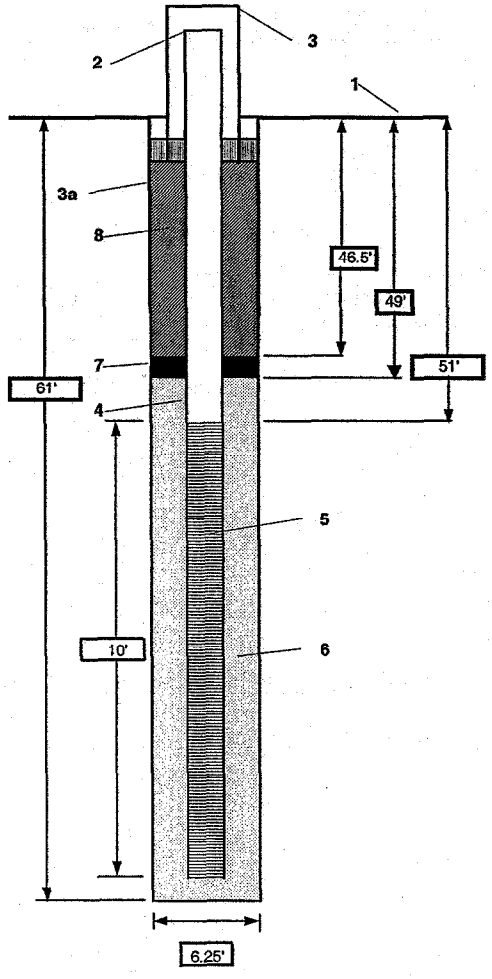

1- Ground elevation at well	
2- Top of casing elevation	
3- Wellhead protection cover type	2' Stickup
a) Dia./type of outer surface casing	NA
b) concrete pad dimensions	2 x 2
4- Dia./type of inner well casing	2" I.D. Sch 40 PVC
5- Type/slot size of screen	2" PVC Screen (.010 mm)
6- Type screen filter	# 2 Sand
7- Type of seal	Bentonite seal, # 1 Sand
a) Quantity used	
8- Grout	
a) Grout mix used	2 bag Portland + 20 lbs bentonite powder
b) Method of placement	Tremmie pipe

PROJECT NUMBER	WELL NUMBER		
149208	49GW206S	SHEET 1	OF 1

CH2MHILL

WELL COMPLETION DIAGRAM

PROJECT : White Oak
LOCATION : Silver Spring, Maryland
DRILLING METHOD AND EQUIPMENT USED : HSA
DRILLING CONTRACTOR : Parratt Wolff START : 12/02/02 END : 12/02/02 GEOLOGIST : R. Peirpont

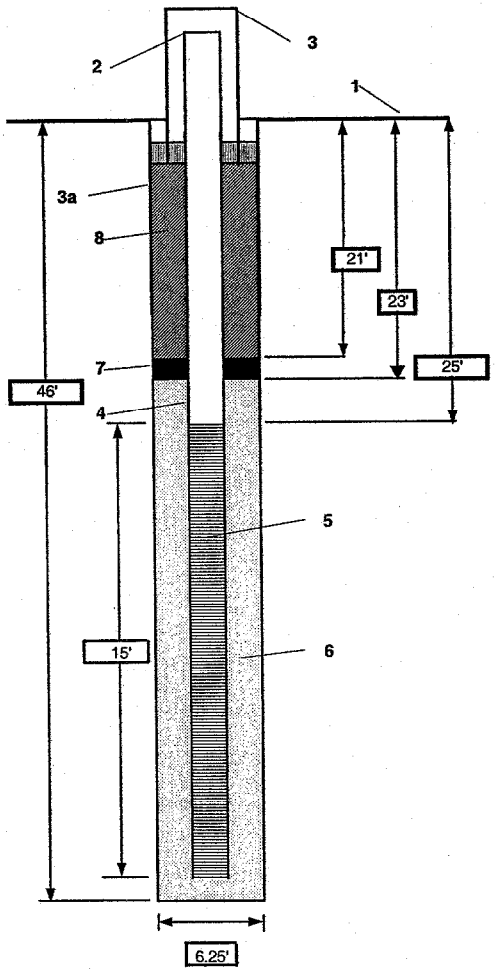

1- Ground elevation at well	
2- Top of casing elevation	
3- Wellhead protection cover type	2' Stickup
a) Dia./type of outer surface casing	NA
b) concrete pad dimensions	3 x 3 x 6
4- Dia./type of inner well casing	2" I.D. Sch 40 PVC
5- Type/slot size of screen	2" PVC Screen (.010 mm)
6- Type screen filter	# 2 Sand
7- Type of seal	Bentonite seal, # 1 Sand
a) Quantity used	
8- Grout	
a) Grout mix used	2 bag Portland + 20 lbs bentonite powder
b) Method of placement	Tremmie pipe

PROJECT NUMBER	WELL NUMBER		
149208	49GW200	SHEET 1	OF 1

CH2MHILL

WELL COMPLETION DIAGRAM

PROJECT : White Oak
LOCATION : Silver Spring, Maryland
DRILLING METHOD AND EQUIPMENT USED : HSA
DRILLING CONTRACTOR : Parratt Wolff START : 11/5/01 END : 11/5/01 GEOLOGIST : D. Steckler

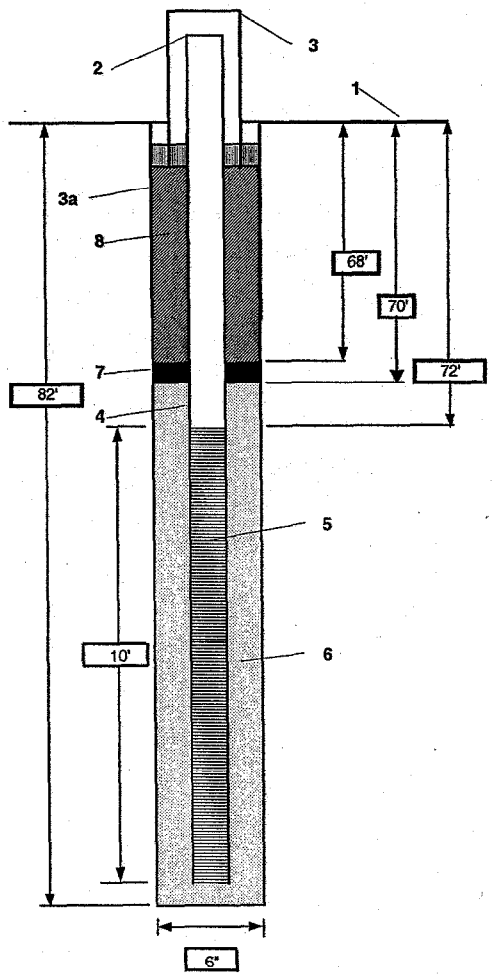

1- Ground elevation at well	
2- Top of casing elevation	
3- Wellhead protection cover type	2' Stickup
a) Dia./type of outer surface casing	NA
b) concrete pad dimensions	3 x 3 x 6
4- Dia./type of inner well casing	2" I.D. Sch 40 PVC
5- Type/slot size of screen	2" PVC Screen (.010 mm)
6- Type screen filter	# 2 Sand
7- Type of seal	Bentonite seal, # 1 Sand
a) Quantity used	
8- Grout	
a) Grout mix used	2 bag Portland + 20 lbs bentonite powder
b) Method of placement	Tremmie pipe

CH2MHILL

PROJECT NUMBER	WELL NUMBER		
149208	49GW201D	SHEET 1	OF 1

WELL COMPLETION DIAGRAM

PROJECT : White Oak

LOCATION : Silver Spring, Maryland

DRILLING METHOD AND EQUIPMENT USED : HSA

DRILLING CONTRACTOR : Parratt Wolff START : 6/29/02 END : 6/29/02 GEOLOGIST : D. Clayton

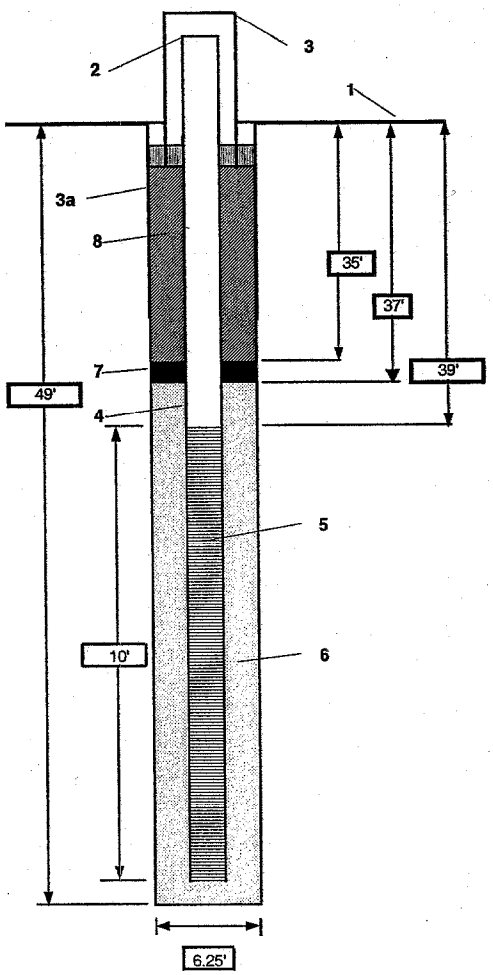

1- Ground elevation at well	
2- Top of casing elevation	
3- Wellhead protection cover type	2' Stickup
a) Dia./type of outer surface casing	NA
b) concrete pad dimensions	3 x 3 x 6
4- Dia./type of inner well casing	2" I.D. Sch 40 PVC
5- Type/slot size of screen	2" PVC Screen (.010 mm)
6- Type screen filter	# 2 Sand
7- Type of seal	Bentonite seal, # 1 Sand
a) Quantity used	
8- Grout	
a) Grout mix used	2 bag Portland + 20 lbs bentonite powder
b) Method of placement	Tremmie pipe

PROJECT NUMBER	WELL NUMBER		
149208	49GW201DD	SHEET 1	OF 1

CH2MHILL

WELL COMPLETION DIAGRAM

PROJECT : NSWC-White Oak

LOCATION : Silver Spring, Maryland

DRILLING METHOD AND EQUIPMENT USED : HSA and Percussion

DRILLING CONTRACTOR : Parratt Wolff START : 11/25/2002 END : 11/25/2002 GEOLOGIST : D. Steckler

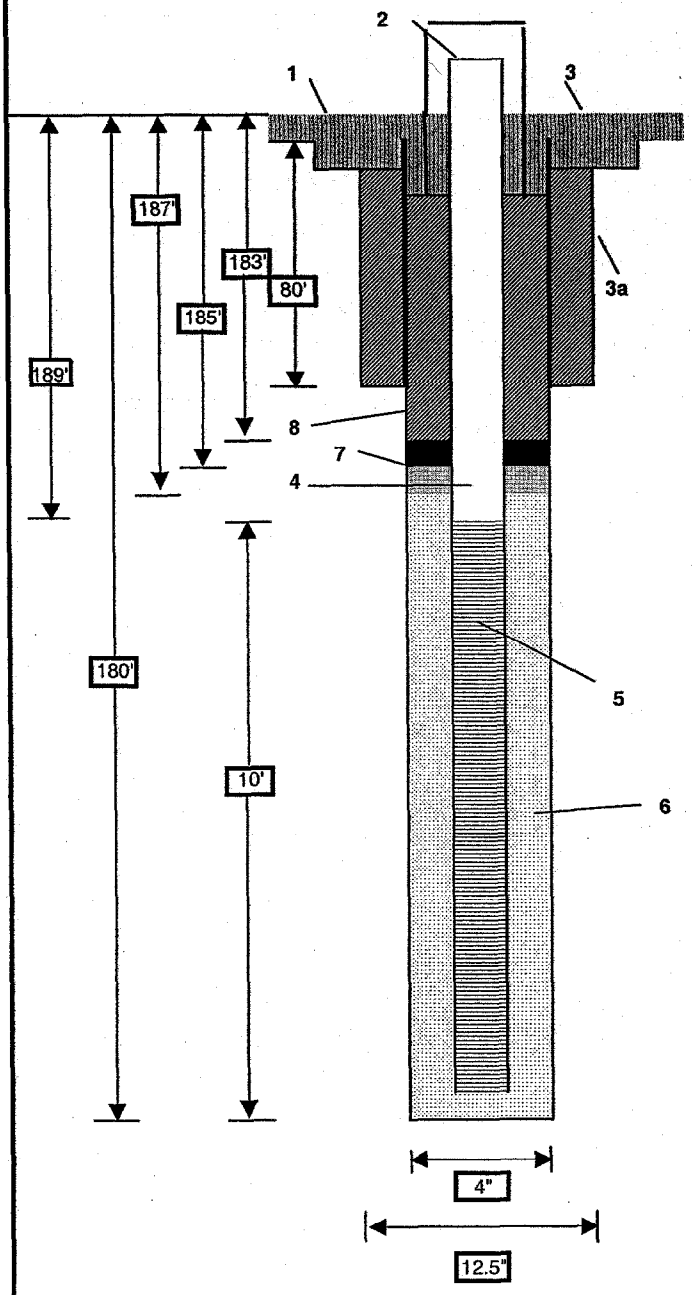

1- Ground elevation at well _____

2- Top of casing elevation _____

3- Wellhead protection cover type Sick-up
   a) Dia./type of outer surface casing 4" Steel
   b) concrete pad dimensions 2' x 2'

4- Dia./type of inner well casing 2" I.D. Sch 40 PVC

5- Type/slot size of screen 2" PVC Screen (.010 mm)

6- Type screen filter #2 Sand

7- Type of seal Bentonite seal, #1 Sand
   a) Quantity used _____

8- Grout
   a) Grout mix used 1 bag Portland + 5 lbs bentonite per 8 gal water
   b) Method of placement Tremmie pipe

PROJECT NUMBER	WELL NUMBER		
149208	49GW201S	SHEET 1	OF 1

CH2MHILL

WELL COMPLETION DIAGRAM

PROJECT : White Oak
LOCATION : Silver Spring, Maryland
DRILLING METHOD AND EQUIPMENT USED : HSA
DRILLING CONTRACTOR : Parratt Wolff START : 7/11/02 END : 7/11/02 GEOLOGIST : E. Carpenetti

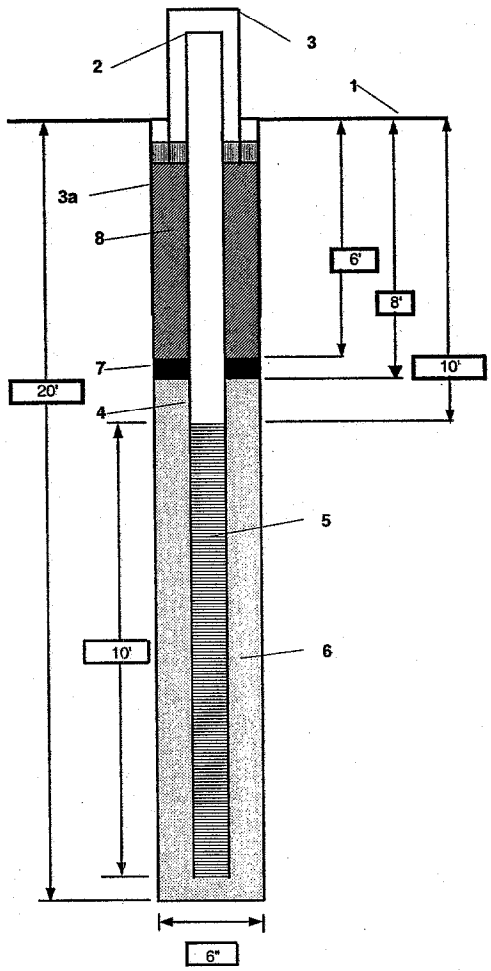

1- Ground elevation at well	
2- Top of casing elevation	
3- Wellhead protection cover type	2' Stickup
a) Dia./type of outer surface casing	NA
b) concrete pad dimensions	3 x 3 x 6
4- Dia./type of inner well casing	2" I.D. Sch 40 PVC
5- Type/slot size of screen	2" PVC Screen (.010 mm)
6- Type screen filter	# 2 Sand
7- Type of seal	Bentonite seal, # 1 Sand
a) Quantity used	
8- Grout	
a) Grout mix used	2 bag Portland + 20 lbs bentonite powder
b) Method of placement	Tremmie pipe

PROJECT NUMBER	WELL NUMBER		
149208	49GW202D	SHEET 1	OF 1

CH2MHILL

WELL COMPLETION DIAGRAM

PROJECT : White Oak
LOCATION : Silver Spring, Maryland
DRILLING METHOD AND EQUIPMENT USED : HSA
DRILLING CONTRACTOR : Parratt Wolff START : 1/19/03 END : 1/19/03 GEOLOGIST : E. Carenetti

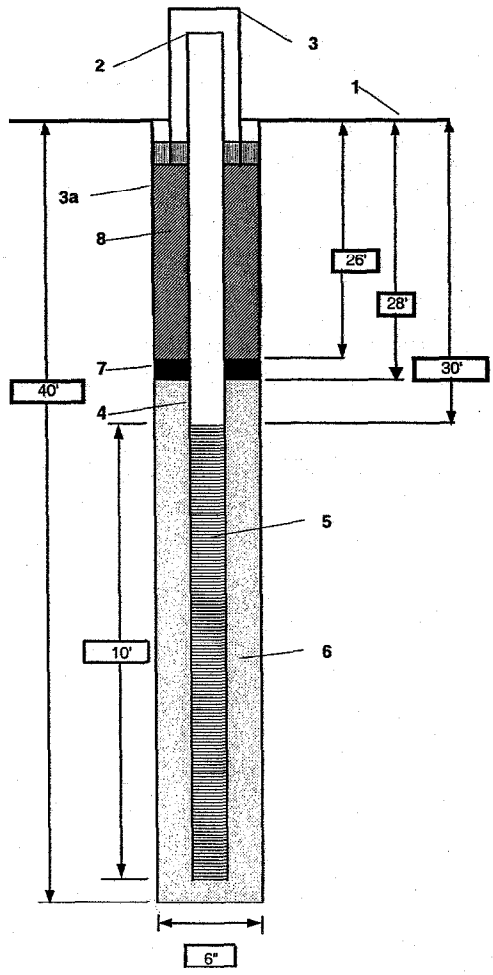

1- Ground elevation at well	
2- Top of casing elevation	
3- Wellhead protection cover type	2' Stickup
a) Dia./type of outer surface casing	NA
b) concrete pad dimensions	3 x 3 x 6
4- Dia./type of inner well casing	2" I.D. Sch 40 PVC
5- Type/slot size of screen	2" PVC Screen (.010 mm)
6- Type screen filter	# 2 Sand
7- Type of seal	Bentonite seal, # 1 Sand
a) Quantity used	
8- Grout	
a) Grout mix used	2 bag Portland + 20 lbs bentonite powder
b) Method of placement	Tremmie pipe

PROJECT NUMBER	WELL NUMBER		
149208	49GW202S	SHEET 1	OF 1

CH2MHILL

WELL COMPLETION DIAGRAM

PROJECT : White Oak
LOCATION : Silver Spring, Maryland
DRILLING METHOD AND EQUIPMENT USED : HSA
DRILLING CONTRACTOR : Parratt Wolff START : 7/02/02 END : 7/02/02 GEOLOGIST : D. Clayton

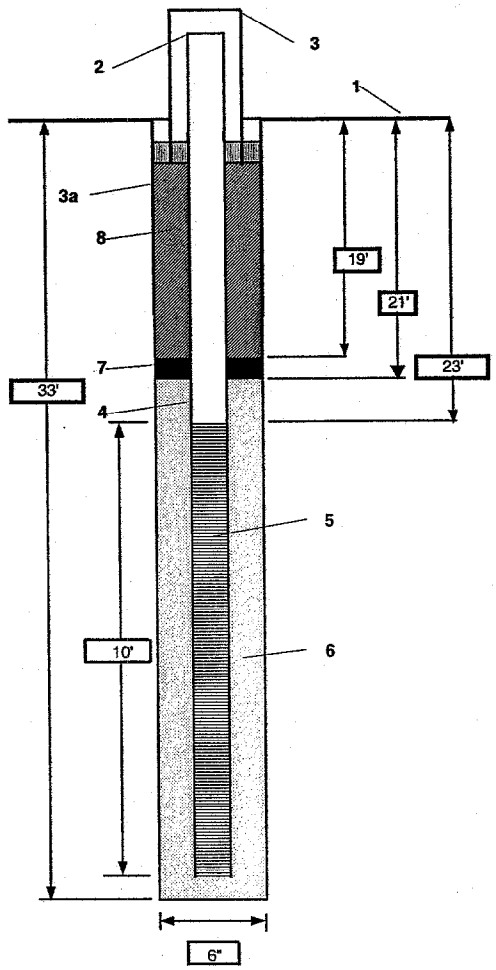

1- Ground elevation at well	
2- Top of casing elevation	
3- Wellhead protection cover type	2' Stickup
a) Dia./type of outer surface casing	NA
b) concrete pad dimensions	3 x 3 x 6
4- Dia./type of inner well casing	2" I.D. Sch 40 PVC
5- Type/slot size of screen	2" PVC Screen (.010 mm)
6- Type screen filter	# 2 Sand
7- Type of seal	Bentonite seal, # 1 Sand
a) Quantity used	
8- Grout	
a) Grout mix used	2 bag Portland + 20 lbs bentonite powder
b) Method of placement	Tremmie pipe

PROJECT NUMBER	WELL NUMBER	
149208	49GW206S	SHEET 1 OF 1

CH2MHILL

WELL COMPLETION DIAGRAM

PROJECT : White Oak
LOCATION : Silver Spring, Maryland
DRILLING METHOD AND EQUIPMENT USED : HSA
DRILLING CONTRACTOR : Parratt Wolff START : 12/02/02 END : 12/02/02 GEOLOGIST : R. Peirpont

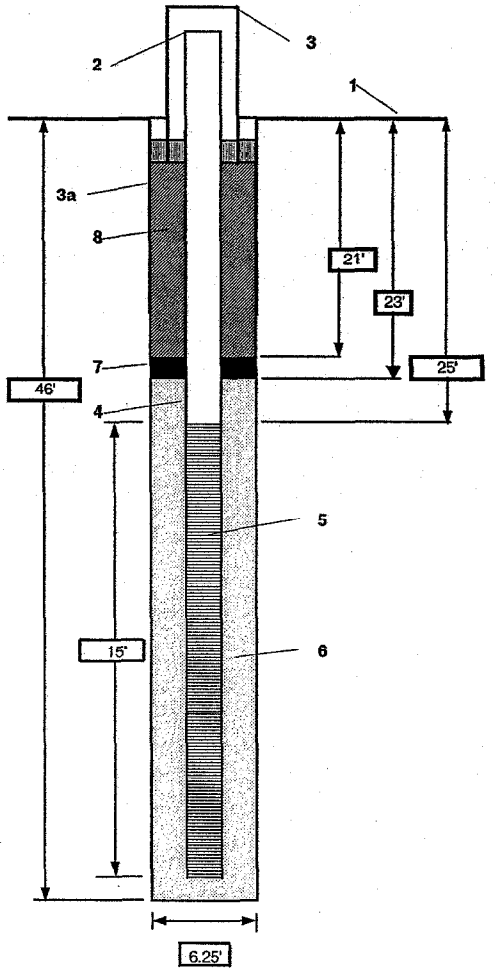

1- Ground elevation at well	
2- Top of casing elevation	
3- Wellhead protection cover type	2' Stickup
a) Dia./type of outer surface casing	NA
b) concrete pad dimensions	3 x 3 x 6
4- Dia./type of inner well casing	2" I.D. Sch 40 PVC
5- Type/slot size of screen	2" PVC Screen (.010 mm)
6- Type screen filter	# 2 Sand
7- Type of seal	Bentonite seal, # 1 Sand
a) Quantity used	
8- Grout	
a) Grout mix used	2 bag Portland + 20 lbs bentonite powder
b) Method of placement	Tremmie pipe

PROJECT NUMBER	WELL NUMBER		
149208	49GW206S	SHEET 1	OF 1

CH2MHILL

WELL COMPLETION DIAGRAM

PROJECT : White Oak
LOCATION : Silver Spring, Maryland
DRILLING METHOD AND EQUIPMENT USED : HSA
DRILLING CONTRACTOR : Parratt Wolff START : 12/02/02 END : 12/02/02 GEOLOGIST : R. Peirpont

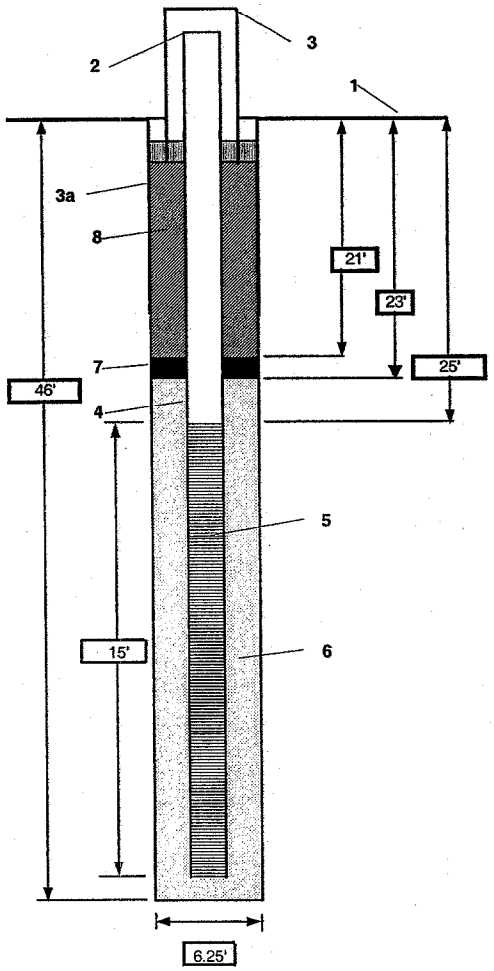

1- Ground elevation at well	
2- Top of casing elevation	
3- Wellhead protection cover type	2' Stickup
a) Dia./type of outer surface casing	NA
b) concrete pad dimensions	3 x 3 x 6
4- Dia./type of inner well casing	2" I.D. Sch 40 PVC
5- Type/slot size of screen	2" PVC Screen (.010 mm)
6- Type screen filter	# 2 Sand
7- Type of seal	Bentonite seal, # 1 Sand
a) Quantity used	
8- Grout	
a) Grout mix used	2 bag Portland + 20 lbs bentonite powder
b) Method of placement	Tremmie pipe

Appendix F
Field Data

Table F-1
Field Measurements
Site 49, NSWC White Oak
Silver Spring, Maryland

Well	Date	pH (unitless)	SC (mS/cm)	Turb. (NTUs)	DO (mg/L)	ORP (mV)	Temp (deg-C)	Date	pH (unitless)	SC (mS/cm)	Turb. (NTUs)	DO (mg/L)	ORP (mV)	Temp (deg-C)
49GW200	08/2002	6.84	0.476	36.71	3.28	-74	19.26	10/2002	6.9	0.57	681.1	0.94	174	15.4
49GW201S	08/2002	5.77	0.235	7.7	3.87	162	24.11	10/2002	6.81	0.263	46.3	0.47	90	19.9
49GW201D	08/2002	5.94	0.296	17.3	4.31	6	21.26	10/2002	6.53	0.382	33.3	0.64	-41	17.1
49GW201DD	11/2002	7.42	0.267	339	0.72	-128	NR	02/2003	NR	NR	NR	NR	NR	NR
49GW202S	08/2002	5.17	0.205	400	6.16	155	21.53	10/2002	5.19	0.25	750	3.09	197	16.4
49GW202D								02/2003	6.63	0.303	0	7.46	185	15.48
49GW203	08/2002	5.73	0.401	6.7	3.08	-19	19.74	10/2002	5.44	0.619	0.45	0.4	10	17.5
49GW204	08/2002	5.57	0.263	42.5	3.96	59	26.21	10/2002	5.13	0.343	264	0.98	145	19.3
49GW206S								02/2003	7.09	0.208	26.5	3.16	-54	15.21
49GW206M								02/2003	NR	NR	NR	NR	NR	NR
49GW206D								02/2003	9.2	0.685	4.5	1.62	-166	17.53

Notes:
NR-Not recorded due to slow recharge in wells
SC-Specific conductivity
DO-Dissolved oxygen
OPR-Oxidation-reduction potential
Turb-Turbidity
Temp-Temperature

Table F-2
Groundwater and Surface Water Elevation Data
Site 49, NSWC White Oak
Silver Spring, Maryland

Well	Reference Elevation	DTW 08/01/2002	DTW 02/10/2003	DTW 03/25/2003	Water Elevation 08/01/2002	Water Elevation 02/10/2003	Water Elevation 03/25/2003
49GW200	258.96	54.71	58.00	54.88	204.25	200.96	204.08
49GW201S	197.47	14.60	3.73	11.95	182.87	193.74	185.52
49GW201D	197.81	14.91	13.38	10.34	182.90	184.43	187.47
49GW201DD	196.58	NR	22.57	13.70	NR	174.01	182.88
49GW202S	210.72	21.91	20.41	18.74	188.81	190.31	191.98
49GW202D	212.92	NR	23.85	22.05	NR	189.07	190.87
49GW203	278.10	36.14	32.66	31.44	241.96	245.44	246.66
49GW204	277.52	NR	29.07	28.33	NR	248.45	249.19
49GW206S	253.80	NR	22.21	20.45	NR	231.59	233.35
49GW206M	253.34	NR	60.08	47.09	NR	193.26	206.25
49GW206D	252.58	NR	161.77	179.05	NR	90.81	73.53

Notes:
DTW-Depth to Water from top of casing

Appendix G
Survey Report

Table G-1
Monitoring Well Construction Details
Site 49
NSWC White Oak
Silver Spring, Maryland

Well	Top of Casing Elevation (ft bgs)	Top off Riser Elevation (ft msl)	Ground Surface Elevation (ft bgs)	Bottom of Screen Depth (ft bgs)	Bottom of Screen Elevation (ft msl)	Top of Screen Depth (ft bgs)	Top of Screen Elevation (ft msl)
49GW200	NR	258.96	256.73	82.0	174.73	72	184.73
49GW201S	NR	197.47	191.27	10.0	181.27	20	171.27
49GW201D	NR	197.81	195	49.0	146.00	39	156.00
49GW201DD	196.86	196.58	195.31	99.0	96.31	89	106.31
49GW202S	NR	210.72	211.01	33.0	178.01	23	188.01
49GW202D	212.78	212.92	209.8	40.0	169.80	30	179.80
49GW203	277.9	278.1	276	40.0	236.00	25	251.00
49GW204	277.81	277.52	277.8	40.0	237.80	25	252.80
49GW206S	253.79	253.86	250.9	40.0	210.90	25	225.90
49GW206M	253.23	253.34	250.4	61.0	189.40	51	199.40
49GW206D	252.39	252.58	249.2	180.0	69.20	160	89.20

Notes:
Well 49GW205 is planned for the portion of Site 49 located north of the NSWC-White Oak boundary
Vertical elevations relative to NGVD-1929
ft bgs = feet below ground surface
ft msl = feet above mean sea level
NR = Not recorded

Appendix H
Human Health Risk Assessment Tables

TABLE 1

SELECTION OF EXPOSURE PATHWAYS

Site 49 RFI Report

NSWC - White Oak

Silver Spring, Maryland

Scenario Timeframe	Medium	Exposure Medium	Exposure Point	Receptor Population	Receptor Age	Exposure Route	On-Site/ Off-Site	Type of Analysis	Rationale for Selection or Exclusion of Exposure Pathway
Current	Groundwater	Groundwater	Bedrock Aquifer Tap Water	Resident	Adult	Dermal	On-site	None	Groundwater not currently used on site as a water supply.
						Ingestion	On-site	None	Groundwater not currently used on site as a water supply.
					Child	Dermal	On-site	None	Groundwater not currently used on site as a water supply.
						Ingestion	On-site	None	Groundwater not currently used on site as a water supply.
Current/Future	Surface Water	Surface Water	Paint Branch	Recreational	Adult	Dermal	On-site	Quant	Nearby residents may contact surface water in Paint Branch
						Ingestion	On-site	Quant	Nearby residents may contact surface water in Paint Branch
					Adolescents	Dermal	On-site	Quant	Nearby residents may contact surface water in Paint Branch
						Ingestion	On-site	Quant	Nearby residents may contact surface water in Paint Branch
Future	Groundwater	Groundwater	Bedrock Aquifer - Tap Water	Resident	Adult	Dermal	On-site	Quant	Groundwater on-site could be used as a potable water supply in the future. Groundwater is used as public water supply within 4 miles of site.
						Ingestion	On-site	Quant	Groundwater on-site could be used as a potable water supply in the future. Groundwater is used as public water supply within 4 miles of site.
					Child	Dermal	On-site	Quant	Groundwater on-site could be used as a potable water supply in the future. Groundwater is used as public water supply within 4 miles of site.
						Ingestion	On-site	Quant	Groundwater on-site could be used as a potable water supply in the future. Groundwater is used as public water supply within 4 miles of site.
					Child/Adult	Dermal	On-site	Quant	Groundwater on-site could be used as a potable water supply in the future. Groundwater is used as public water supply within 4 miles of site.
						Ingestion	On-site	Quant	Groundwater on-site could be used as a potable water supply in the future. Groundwater is used as public water supply within 4 miles of site.
			Bedrock Aquifer - Water in Excavation	Construction Worker	Adult	Dermal	On-site	Quant	Construction workers may contact groundwater while performing construction or excavation activities.
						Ingestion	On-site	None	Incidental ingestion of groundwater by construction workers would be minimal during construction or excavation activities.
		Air	Bedrock Aquifer - Water Vapors at Showerhead	Resident	Adult	Inhalation	On-site	Quant	Although unlikely, groundwater could be used as a potable water supply in the future and adults may inhale volatiles while showering.
					Child	Inhalation	On-site	None	Children are assumed to take baths, not showers, resulting in minimal inhalation exposure.
					Child/Adult	Inhalation	On-site	None	Children are assumed to take baths, not showers, resulting in minimal inhalation exposure.
			Bedrock Aquifer - Water Vapors at Excavation	Construction Worker	Adult	Inhalation	On-site	Quant	Construction workers may inhale vapors from groundwater while performing construction or excavation activities.

Table 2.1
OCCURRENCE, DISTRIBUTION AND SELECTION OF CHEMICALS OF POTENTIAL CONCERN
Site 49 RFI Report
NSWC - White Oak
Silver Spring, Maryland

Scenario Timeframe: Current/Future
Medium: Surface Water
Exposure Medium: Surface Water

Exposure Point	CAS Number	Chemical	Minimum [1] Concentration Qualifier	Maximum [1] Concentration Qualifier	Units	Location of Maximum Concentration	Detection Frequency	Range of Detection Limits	Concentration [2] Used for Screening	Background [3] Value	Screening [4] Toxicity Value	Potential ARAR/TBC Value	Potential ARAR/TBC Source	COPC Flag	Rationale for [5] Contaminant Deletion or Selection
Paint Branch	59-50-7	4-Chloro-3-methylphenol	3.9 K	3.9 K	UG/L	PBSW2100001	1/3	11 - 11	3.9		30 N			NO	BSL
	117-81-7	bis(2-Ethylhexyl)phthalate	1.4 J	2.5 J	UG/L	PBSW2119901	2/3	11 - 11	2.5		47.8 C			NO	BSL
	7440-39-3	Barium	28.6 J	30 J	UG/L	PBSW2110001	3/3	200 - 200	30		2,555 N			NO	BSL
	7440-70-2	Calcium	14,300	14,800 J	UG/L	PBSW2110001	3/3	5000 - 5000	14800		NA			NO	NUT
	7439-89-6	Iron	255	511 J	UG/L	PBSW2110001	3/3	100 - 100	511		11,000 N			NO	BSL
	7439-92-1	Lead	1.6 J	1.6 J	UG/L	PBSW2119901	1/3	10 - 10	1.6		15			NO	BSL
	7439-95-4	Magnesium	4,020 J	4,090 J	UG/L	PBSW2110001	3/3	5000 - 5000	4090		NA			NO	NUT
	7439-96-5	Manganese	25.4 J	76.9 J	UG/L	PBSW2110001	3/3	15 - 15	76.9		730 N			NO	BSL
	7440-02-0	Nickel	4.1 J	4.1 J	UG/L	PBSW2119901	1/3	40 - 40	4.1		730 N			NO	BSL
	7440-09-7	Potassium	2,930 J	3,100 J	UG/L	PBSW2110001	3/3	5000 - 5000	3100		NA			NO	NUT
	7440-23-5	Sodium	12,400 J	12,900 J	UG/L	PBSW2110001	3/3	5000 - 5000	12900		NA			NO	NUT

[1] Minimum/Maximum detected concentrations.
[2] Maximum concentration is used for screening.
[3] Background values not available.
[4] Risk-Based Concentration Table, April 14 2004, U.S. EPA Region III Tap Water, adjusted x 10.
Lead screening toxicity value is 15 µg/l, the EPA Safe Drinking Water Action Level for lead.
RBC value for manganese-nonfood used as surrogate for manganese.
2-Chlorophenol used as surrogate for 4-chloro-3-methylphenol
[5] Rationale Codes
Selection Reason: Above Screening Levels (ASL)
Deletion Reason: No Toxicity Information (NTX)
Essential Nutrient (NUT)
Below Screening Level (BSL)

SQL = Sample Quantification Limit
COPC = Chemical of Potential Concern
ARAR/TBC = Applicable or Relevant and Appropriate Requirement/ To Be Considered
J = Estimated Value
K = Biased High
L = Biased Low
C = Carcinogenic
N = Noncarcinogenic

Table 2.2

OCCURRENCE, DISTRIBUTION AND SELECTION OF CHEMICALS OF POTENTIAL CONCERN

Site 49 RFI Report

NSWC - White Oak

Silver Spring, Maryland

Scenario Timeframe: Future
Medium: Groundwater
Exposure Medium: Groundwater

Exposure Point	CAS Number	Chemical	Minimum [1] Concentration Qualifier	Maximum [1] Concentration Qualifier	Units	Location of Maximum Concentration	Detection Frequency	Range of Detection Limits	Concentration [2] Used for Screening	Background [3] Value	Screening [4] Toxicity Value	Potential ARAR/TBC Value	Potential ARAR/TBC Source	COPC Flag	Rationale for [5] Contaminant Deletion or Selection
Bedrock Aquifer - Tap Water	71-55-6	1,1,1-Trichloroethane	1.2 J	1.2 J	UG/L	049GW202D001	1/16	0.5 - 50	1.2		317 N			NO	BSL
	75-34-3	1,1-Dichloroethane	1.1	1.9 K	UG/L	049GW201D002	2/16	0.5 - 50	1.9		79.8 N			NO	BSL
	75-35-4	1,1-Dichloroethene	0.21 J	11 K	UG/L	049GW201D002	7/16	0.5 - 50	11		35.3 N			NO	BSL
	106-93-4	1,2-Dibromoethane	65 J	65 J	UG/L	049GW2000001	1/16	0.5 - 50	65		7.52E-04 C			YES	ASL
	67-64-1	Acetone	2.7 J	2.7 J	UG/L	049GW2029901	1/8	5 - 250	2.7		550 N			NO	BSL
	75-25-2	Bromoform	0.23 J	0.23 J	UG/L	049GW2029901	1/16	0.5 - 50	0.23		8.48 C			NO	BSL
	74-83-9	Bromomethane	0.26 K	0.26 K	UG/L	049GW201D002	1/16	0.5 - 50	0.26		0.852 N			NO	BSL
	67-66-3	Chloroform	2.6 J	37	UG/L	049GW206D001 049GW206D9901	4/16	0.5 - 50	37		0.15 C			YES	ASL
	110-82-7	Cyclohexane	0.88 J	0.88 J	UG/L	049GW2020001	1/16	0.5 - 50	0.88		1,200 N			NO	BSL
	1634-04-4	Methyl-tert-butyl ether (MTBE)	1.3 J	1.3 J	UG/L	049GW206D001	1/16	0.5 - 50	1.3		2.6 C			NO	BSL
	100-42-5	Styrene	41 J	41 J	UG/L	049GW2000001	1/16	0.5 - 50	41		162 N			NO	BSL
	127-18-4	Tetrachloroethene	0.48 J	1.1 J	UG/L	049GW206S0001	2/16	0.5 - 50	1.1		0.1 C			YES	ASL
	108-88-3	Toluene	1.5 J	1.8 J	UG/L	049GW201DD001	2/16	0.5 - 50	1.8		74.7 N			NO	BSL
	79-01-6	Trichloroethene	6.5 J	4,400	UG/L	049GW201D002	16/16	0.5 - 100	4400		0.026 C			YES	ASL
	75-01-4	Vinyl chloride	0.57	5.7 K	UG/L	049GW201D002	4/16	0.5 - 50	5.7		0.015 C			YES	ASL
	156-59-2	cis-1,2-Dichloroethene	1.3 J	1,100	UG/L	049GW201D002	16/16	0.5 - 50	1100		6.08 N			YES	ASL
	156-60-5	trans-1,2-Dichloroethene	3.1 J	46 K	UG/L	049GW201D002	8/16	0.5 - 50	46		12.2 N			YES	ASL
	83-32-9	Acenaphthene	2.8 J	2.8 J	UG/L	049GW2030001	1/4	5.3 - 5.3	2.8		36.5 N			NO	BSL
	131-11-3	Dimethyl phthalate	7.1	7.1	UG/L	049GW2000001	1/4	5.3 - 5.3	7.1		36,500 N			NO	BSL
	85-01-8	Phenanthrene	1.3 J	1.3 J	UG/L	049GW2030001	1/4	5.3 - 5.3	1.3		18.3 N			NO	BSL
	7429-90-5	Aluminum	46 J	6,800	UG/L	049GW206M001	3/10	200 - 200	6800		3,650 N			YES	ASL
	7440-39-3	Barium	24.2 J	101 J	UG/L	049GW2000001	10/10	200 - 200	101		256 N			NO	BSL
	7440-43-9	Cadmium	0.24 J	0.35 J	UG/L	049GW2000001 049GW201S001	3/10	5 - 5	0.35		1.83 N			NO	BSL
	7440-70-2	Calcium	9,140	54,300	UG/L	049GW2000001	10/10	5000 - 5000	54300		NA			NO	NUT
	7440-47-3	Chromium	0.74 J	75.5	UG/L	049GW206M001	3/10	10 - 10	75.5		11.0 N			YES	ASL
	7440-48-4	Cobalt	0.57 J	10.6 J	UG/L	049GW206M001	5/10	50 - 50	10.6		73 N			NO	BSL
	7440-50-8	Copper	6.8 J	28.6	UG/L	049GW206M001	2/10	25 - 25	28.6		146 N			NO	BSL
	7439-89-6	Iron	42.7 J	14,100	UG/L	049GW206M001	8/10	100 - 100	14100		1,100 N			YES	ASL
	7439-92-1	Lead	2.9 J	13.9 L	UG/L	049GW202D001	4/10	3 - 10	13.9		15			NO	BSL
	7439-95-4	Magnesium	4,360 J	13,800	UG/L	049GW2000001	10/10	5000 - 5000	13800		NA			NO	NUT
	7439-96-5	Manganese	17.1	2,290	UG/L	049GW2030001	10/10	15 - 15	2290		73 N			YES	ASL
	7440-02-0	Nickel	2.8 J	81	UG/L	049GW206M001	9/10	40 - 40	81		73 N			YES	ASL
	7440-09-7	Potassium	3,240 J	11,300	UG/L	049GW206M001	10/10	5000 - 5000	11300		NA			NO	NUT
	7782-49-2	Selenium	5.3	5.3	UG/L	049GW206D001	1/10	5 - 5	5.3		18.3 N			NO	BSL
	7440-23-5	Sodium	11,800	132,000 K	UG/L	049GW206D001	10/10	5000 - 5000	132000		NA			NO	NUT
	7440-62-2	Vanadium	10 J	20.6 J	UG/L	049GW206D001	2/10	50 - 50	20.6		3.7 N			YES	ASL
	7440-66-6	Zinc	8.6 J	47.5	UG/L	049GW2020001	5/10	20 - 20	47.5		1,095 N			NO	BSL

Table 2.2
OCCURRENCE, DISTRIBUTION AND SELECTION OF CHEMICALS OF POTENTIAL CONCERN
Site 49 RFI Report
NSWC - White Oak
Silver Spring, Maryland

Scenario Timeframe: Future
Medium: Groundwater
Exposure Medium: Groundwater

Exposure Point	CAS Number	Chemical	Minimum [1] Concentration Qualifier	Maximum [1] Concentration Qualifier	Units	Location of Maximum Concentration	Detection Frequency	Range of Detection Limits	Concentration [2] Used for Screening	Background [3] Value	Screening [4] Toxicity Value	Potential ARAR/TBC Value	Potential ARAR/TBC Source	COPC Flag	Rationale for [5] Contaminant Deletion or Selection
Bedrock Aquifer - Water in Excavation Pit	71-55-6	1,1,1-Trichloroethane	1.2 J	1.2 J	UG/L	049GW202D001	1/16	0.5 - 50	1.2		317 N			NO	BSL
	75-34-3	1,1-Dichloroethane	1.1	1.9 K	UG/L	049GW201D002	2/16	0.5 - 50	1.9		79.8 N			NO	BSL
	75-35-4	1,1-Dichloroethene	0.21 J	11 K	UG/L	049GW201D002	7/16	0.5 - 50	11		35.3 N			NO	BSL
	106-93-4	1,2-Dibromoethane	65 J	65 J	UG/L	049GW2000001	1/16	0.5 - 50	65		7.52E-04 C			YES	ASL
	67-64-1	Acetone	2.7 J	2.7 J	UG/L	049GW2029901	1/8	5 - 250	2.7		550 N			NO	BSL
	75-25-2	Bromoform	0.23 J	0.23 J	UG/L	049GW2029901	1/16	0.5 - 50	0.23		8.48 C			NO	BSL
	74-83-9	Bromomethane	0.26 K	0.26 K	UG/L	049GW201D002	1/16	0.5 - 50	0.26		0.852 N			NO	BSL
	67-66-3	Chloroform	2.6 J	37	UG/L	049GW206D001 049GW206D9901	4/16	0.5 - 50	37		0.15 C			YES	ASL
	110-82-7	Cyclohexane	0.88 J	0.88 J	UG/L	049GW2020001	1/16	0.5 - 50	0.88		1,200 N			NO	BSL
	1634-04-4	Methyl-tert-butyl ether (MTBE)	1.3 J	1.3 J	UG/L	049GW206D001	1/16	0.5 - 50	1.3		2.6 C			NO	BSL
	100-42-5	Styrene	41 J	41 J	UG/L	049GW2000001	1/16	0.5 - 50	41		162 N			NO	BSL
	127-18-4	Tetrachloroethene	0.48 J	1.1 J	UG/L	049GW206S0001	2/16	0.5 - 50	1.1		0.1 C			YES	ASL
	108-88-3	Toluene	1.5 J	1.8 J	UG/L	049GW201DD001	2/16	0.5 - 50	1.8		74.7 N			NO	BSL
	79-01-6	Trichloroethene	6.5 J	4,400	UG/L	049GW201D002	16/16	0.5 - 100	4400		0.026 C			YES	ASL
	75-01-4	Vinyl chloride	0.57	5.7 K	UG/L	049GW201D002	4/16	0.5 - 50	5.7		0.015 C			YES	ASL
	156-59-2	cis-1,2-Dichloroethene	1.3 J	1,100	UG/L	049GW201D002	16/16	0.5 - 50	1100		6.08 N			YES	ASL
	156-60-5	trans-1,2-Dichloroethene	3.1 J	46 K	UG/L	049GW201D002	8/16	0.5 - 50	46		12.2 N			YES	ASL
	83-32-9	Acenaphthene	2.8 J	2.8 J	UG/L	049GW2030001	1/4	5.3 - 5.3	2.8		36.5 N			NO	BSL
	131-11-3	Dimethyl phthalate	7.1	7.1	UG/L	049GW2000001	1/4	5.3 - 5.3	7.1		36,500 N			NO	BSL
	85-01-8	Phenanthrene	1.3 J	1.3 J	UG/L	049GW2030001	1/4	5.3 - 5.3	1.3		18.3 N			NO	BSL
	7429-90-5	Aluminum	88.8 J	35,600 J	UG/L	049GW206M001	7/10	200 - 200	35600		3,650 N			YES	ASL
	7440-38-2	Arsenic	2.8 J	8.7 J	UG/L	049GW206M001	3/10	10 - 10	8.7		0.0446 C			YES	ASL
	7440-39-3	Barium	26.6 J	225 J	UG/L	049GW206M001	10/10	200 - 200	225		256 N			NO	BSL
	7440-41-7	Beryllium	0.14 J	1.9 J	UG/L	049GW206M001	4/10	5 - 5	1.9		7.3 N			NO	BSL
	7440-43-9	Cadmium	0.21 J	0.46 J	UG/L	049GW2000001	2/10	5 - 5	0.46		1.83 N			NO	BSL
	7440-70-2	Calcium	8,510 J	54,700 J	UG/L	049GW2000001	10/10	5000 - 5000	54700		NA			NO	NUT
	7440-47-3	Chromium	12.7 J	910 J	UG/L	049GW2020001	7/10	10 - 10	910		11.0 N			YES	ASL
	7440-48-4	Cobalt	0.71 J	42.5 J	UG/L	049GW206M001	8/10	50 - 50	42.5		73 N			NO	BSL
	7440-50-8	Copper	10.2 J	166 J	UG/L	049GW206M001	4/10	25 - 25	166		146 N			YES	ASL
	7439-89-6	Iron	778 J	72,400 J	UG/L	049GW206M001	8/10	100 - 100	72400		1,100 N			YES	ASL
	7439-92-1	Lead	4.7 J	20.3 J	UG/L	049GW202D001	5/10	3 - 10	20.3		15			YES	ASL
	7439-95-4	Magnesium	4,150 J	19,600 J	UG/L	049GW206M001	10/10	5000 - 5000	19600		NA			NO	NUT
	7439-96-5	Manganese	9.1 J	2,250 J	UG/L	049GW2030001	10/10	15 - 15	2250		73 N			YES	ASL
	7440-02-0	Nickel	10.8 J	625 J	UG/L	049GW2020001	9/10	40 - 40	625		73 N			YES	ASL
	7440-09-7	Potassium	3,320 J	21,900 J	UG/L	049GW206M001	10/10	5000 - 5000	21900		NA			NO	NUT
	7782-49-2	Selenium	4.8 J	4.8 J	UG/L	049GW206D001	1/10	5 - 5	4.8		18.3 N			NO	BSL
	7440-23-5	Sodium	11,300 J	136,000 J	UG/L	049GW206D001	10/10	5000 - 5000	136000		NA			NO	NUT
	7440-62-2	Vanadium	0.9 J	62.5 J	UG/L	049GW206M001	7/10	50 - 50	62.5		3.7 N			YES	ASL
	7440-66-6	Zinc	12.3 J	185 J	UG/L	049GW206M001	8/10	20 - 20	185		1,095 N			NO	BSL

Table 2.2

OCCURRENCE, DISTRIBUTION AND SELECTION OF CHEMICALS OF POTENTIAL CONCERN

Site 49 RFI Report

NSWC - White Oak

Silver Spring, Maryland

Scenario Timeframe: Future
Medium: Groundwater
Exposure Medium: Groundwater

Exposure Point	CAS Number	Chemical	Minimum [1] Concentration Qualifier	Maximum [1] Concentration Qualifier	Units	Location of Maximum Concentration	Detection Frequency	Range of Detection Limits	Concentration [2] Used for Screening	Background [3] Value	Screening [4] Toxicity Value	Potential ARAR/TBC Value	Potential ARAR/TBC Source	COPC Flag	Rationale for [5] Contaminant Deletion or Selection

A review of the filtered and unfiltered data determined there was a notable disparity, therefore, the filtered results were used for the tap water exposure.
Total metals used for water in the excavation pit because the Construction Worker would not be exposed to water that was filtered.

[1] Minimum/Maximum detected concentrations.
[2] Maximum concentration is used for screening.
[3] Background values not available.
[4] Risk-Based Concentration Table, April 14, 2004, U.S. EPA Region III, Jennifer Hubbard. Tap Water RBC.
RBC value for pyrene used as surrogate for phenanthrene.
RBC value for Chromium VI used for total chromium.
Lead screening toxicity value is 15 ug/L, the EPA tap water screening level for lead.
RBC value for manganese-nonfood used as surrogate for manganese.
RBC value for Chromium VI used for total chromium.
[5] Lead screening toxicity value is 400 mg/kg, the EPA residential soil screening level for lead.
Rationale Codes

Selection Reason: Above Screening Levels (ASL)
Deletion Reason: No Toxicity Information (NTX)
Essential Nutrient (NUT)
Below Screening Level (BSL)

SQL = Sample Quantification Limit
COPC = Chemical of Potential Concern
ARAR/TBC = Applicable or Relevant and Appropriate Requirement/ To Be Considered
J = Estimated Value
K = Biased High
L = Biased Low
C = Carcinogenic
N = Noncarcinogenic

Table 2.3
OCCURRENCE, DISTRIBUTION AND SELECTION OF CHEMICALS OF POTENTIAL CONCERN
Site 49 RFI Report
NSWC - White Oak
Silver Spring, Maryland

Scenario Timeframe: Future
Medium: Groundwater
Exposure Medium: Air

Exposure Point	CAS Number	Chemical	Minimum [1] Concentration Qualifier	Maximum [1] Concentration Qualifier	Units	Location of Maximum Concentration	Detection Frequency	Range of Detection Limits	Concentration [2] Used for Screening	Background [3] Value	Screening [4] Toxicity Value	Potential ARAR/TBC Value	Potential ARAR/TBC Source	COPC Flag	Rationale for [5] Contaminant Deletion or Selection
Bedrock Aquifer - Water Vapors at Showerhead	71-55-6	1,1,1-Trichloroethane	1.2 J	1.2 J	UG/L	049GW202D001	1/16	0.5 - 50	1.2		317 N			NO	BSL
	75-34-3	1,1-Dichloroethane	1.1	1.9 K	UG/L	049GW201D002	2/16	0.5 - 50	1.9		79.8 N			NO	BSL
	75-35-4	1,1-Dichloroethene	0.21 J	11 K	UG/L	049GW201D002	7/16	0.5 - 50	11		35.3 N			NO	BSL
	106-93-4	1,2-Dibromoethane	65 J	65 J	UG/L	049GW2000001	1/16	0.5 - 50	65		7.52E-04 C			YES	ASL
	67-64-1	Acetone	2.7 J	2.7 J	UG/L	049GW2029901	1/8	5 - 250	2.7		550 N			NO	BSL
	75-25-2	Bromoform	0.23 J	0.23 J	UG/L	049GW2029901	1/16	0.5 - 50	0.23		8.48 C			NO	BSL
	74-83-9	Bromomethane	0.26 K	0.26 K	UG/L	049GW201D002	1/16	0.5 - 50	0.26		0.852 N			NO	BSL
	67-66-3	Chloroform	2.6 J	37	UG/L	049GW206D001 049GW206D9901	4/16	0.5 - 50	37		0.15 C			YES	ASL
	110-82-7	Cyclohexane	0.88 J	0.88 J	UG/L	049GW2020001	1/16	0.5 - 50	0.88		1200 N			NO	BSL
	1634-04-4	Methyl-tert-butyl ether (MTBE)	1.3 J	1.3 J	UG/L	049GW206D001	1/16	0.5 - 50	1.3		2.6 C			NO	BSL
	100-42-5	Styrene	41 J	41 J	UG/L	049GW2000001	1/16	0.5 - 50	41		162 N			NO	BSL
	127-18-4	Tetrachloroethene	0.48 J	1.1 J	UG/L	049GW206S0001	2/16	0.5 - 50	1.1		0.1 C			YES	ASL
	108-88-3	Toluene	1.5 J	1.8 J	UG/L	049GW201DD001	2/16	0.5 - 50	1.8		74.7 N			NO	BSL
	79-01-6	Trichloroethene	6.5 J	4,400	UG/L	049GW201D002	16/16	0.5 - 100	4400		0.026 C			YES	ASL
	75-01-4	Vinyl chloride	0.57	5.7 K	UG/L	049GW201D002	4/16	0.5 - 50	5.7		0.015 C			YES	ASL
	156-59-2	cis-1,2-Dichloroethene	1.3 J	1,100	UG/L	049GW201D002	16/16	0.5 - 50	1100		6.08 N			YES	ASL
	156-60-5	trans-1,2-Dichloroethene	3.1 J	46 K	UG/L	049GW201D002	8/16	0.5 - 50	46		12.2 N			YES	ASL
	83-32-9	Acenaphthene	2.8 J	2.8 J	UG/L	049GW2030001	1/4	5.3 - 5.3	2.8		36.5 N			NO	BSL
Bedrock Aquifer - Water Vapors at Excavation	71-55-6	1,1,1-Trichloroethane	1.2 J	1.2 J	UG/L	049GW202D001	1/16	0.5 - 50	1.2		317 N			NO	BSL
	75-34-3	1,1-Dichloroethane	1.1	1.9 K	UG/L	049GW201D002	2/16	0.5 - 50	1.9		79.8 N			NO	BSL
	75-35-4	1,1-Dichloroethene	0.21 J	11 K	UG/L	049GW201D002	7/16	0.5 - 50	11		35.3 N			NO	BSL
	106-93-4	1,2-Dibromoethane	65 J	65 J	UG/L	049GW2000001	1/16	0.5 - 50	65		7.52E-04 C			YES	ASL
	67-64-1	Acetone	2.7 J	2.7 J	UG/L	049GW2029901	1/8	5 - 250	2.7		550 N			NO	BSL
	75-25-2	Bromoform	0.23 J	0.23 J	UG/L	049GW2029901	1/16	0.5 - 50	0.23		8.48 C			NO	BSL
	74-83-9	Bromomethane	0.26 K	0.26 K	UG/L	049GW201D002	1/16	0.5 - 50	0.26		0.852 N			NO	BSL
	67-66-3	Chloroform	2.6 J	37	UG/L	049GW206D001 049GW206D9901	4/16	0.5 - 50	37		0.15 C			YES	ASL
	110-82-7	Cyclohexane	0.88 J	0.88 J	UG/L	049GW2020001	1/16	0.5 - 50	0.88		1200 N			NO	BSL
	1634-04-4	Methyl-tert-butyl ether (MTBE)	1.3 J	1.3 J	UG/L	049GW206D001	1/16	0.5 - 50	1.3		2.6 C			NO	BSL
	100-42-5	Styrene	41 J	41 J	UG/L	049GW2000001	1/16	0.5 - 50	41		162 N			NO	BSL
	127-18-4	Tetrachloroethene	0.48 J	1.1 J	UG/L	049GW206S0001	2/16	0.5 - 50	1.1		0.1 C			YES	ASL
	108-88-3	Toluene	1.5 J	1.8 J	UG/L	049GW201DD001	2/16	0.5 - 50	1.8		74.7 N			NO	BSL
	79-01-6	Trichloroethene	6.5 J	4,400	UG/L	049GW201D002	16/16	0.5 - 100	4400		0.026 C			YES	ASL
	75-01-4	Vinyl chloride	0.57	5.7 K	UG/L	049GW201D002	4/16	0.5 - 50	5.7		0.015 C			YES	ASL
	156-59-2	cis-1,2-Dichloroethene	1.3 J	1,100	UG/L	049GW201D002	16/16	0.5 - 50	1100		6.08 N			YES	ASL
	156-60-5	trans-1,2-Dichloroethene	3.1 J	46 K	UG/L	049GW201D002	8/16	0.5 - 50	46		12.2 N			YES	ASL
	83-32-9	Acenaphthene	2.8 J	2.8 J	UG/L	049GW2030001	1/4	5.3 - 5.3	2.8		36.5 N			NO	BSL

Table 2.3

OCCURRENCE, DISTRIBUTION AND SELECTION OF CHEMICALS OF POTENTIAL CONCERN

Site 49 RFI Report

NSWC - White Oak

Silver Spring, Maryland

Scenario Timeframe: Future
Medium: Groundwater
Exposure Medium: Air

Exposure Point	CAS Number	Chemical	Minimum [1] Concentration Qualifier	Maximum [1] Concentration Qualifier	Units	Location of Maximum Concentration	Detection Frequency	Range of Detection Limits	Concentration [2] Used for Screening	Background [3] Value	Screening [4] Toxicity Value	Potential ARAR/TBC Value	Potential ARAR/TBC Source	COPC Flag	Rationale for [5] Contaminant Deletion or Selection

[1] Minimum/Maximum detected concentrations.
[2] Maximum concentration is used for screening.
[3] Background values not available.
[4] Risk-Based Concentration Table, April 25, 2003, U.S. EPA Region III, Jennifer Hubbard. Tap Water RBC.
RBC value for hexane used as surrogate for cyclohexane.
RBC value for pyrene used as surrogate for phenanthrene.
RBC value for Chromium VI used for total chromium.
Lead screening toxicity value is 15 ug/L, the EPA tap water screening level for lead.
RBC value for manganese-nonfood used as surrogate for manganese.
RBC value for Chromium VI used for total chromium.
[5] Lead screening toxicity value is 400 mg/kg, the EPA residential soil screening level for lead.
Rationale Codes

Selection Reason: Above Screening Levels (ASL)
Deletion Reason: No Toxicity Information (NTX)
Essential Nutrient (NUT)
Below Screening Level (BSL)

SQL = Sample Quantification Limit
COPC = Chemical of Potential Concern
ARAR/TBC = Applicable or Relevant and Appropriate Requirement/ To Be Considered
J = Estimated Value
K = Biased High
L = Biased Low
C = Carcinogenic
N = Noncarcinogenic

Table 3.1.RME
MEDIUM-SPECIFIC EXPOSURE POINT CONCENTRATION SUMMARY
REASONABLE MAXIMUM EXPOSURE
Site 49 RFI Report
NSWC - White Oak
Silver Spring, Maryland

Scenario Timeframe: Future
Medium: Groundwater
Exposure Medium: Groundwater

Exposure Point	Chemical of Potential Concern	Units	Arithmetic Mean	95% UCL of (N/T/NP)		Maximum Concentration (Qualifier)		Exposure Point Concentration			
								Value	Units	Statistic	Rationale
Bedrock Aquifer - Tap Water											
	1,2-Dibromoethane	UG/L	7.47	33.2	NP	65.0	J	33.2	UG/L	97.5% Cheb-m	(3)
	Chloroform	UG/L	6.98	24.7	NP	37.0		24.7	UG/L	97.5% Cheb-m	(3)
	Tetrachloroethene	UG/L	4.73	17.5	NP	1.10	J	1.1	UG/L	Max	(5)
	Trichloroethene	UG/L	740	5,105	T	4,400		4,400	UG/L	Max	(5)
	Vinyl chloride	UG/L	5.40	17.8	NP	5.70	K	5.7	UG/L	Max	(5)
	cis-1,2-Dichloroethene	UG/L	168	1,460	T	1,100		1,100	UG/L	Max	(5)
	trans-1,2-Dichloroethene	UG/L	10.4	31.7	NP	46.0	K	31.7	UG/L	97.5% Cheb-m	(3)
	Aluminum	UG/L	726	4,943	NP	6,800		4,943	UG/L	97.5% Cheb-m	(3)
	Chromium	UG/L	11	86.4	NP	75.5		75.5	UG/L	Max	(5)
	Iron	UG/L	2,927	50,765	T	14,100		14,100	UG/L	Max	(5)
	Manganese	UG/L	447	3,096	T	2,290		2,290	UG/L	Max	(5)
	Nickel	UG/L	20	57.5	T	81.0		57.5	UG/L	95% Cheb	(1)
	Vanadium	UG/L	3.36	16.7	NP	20.6	J	16.7	UG/L	97.5% Cheb-m	(3)

Table 3.1.RME
MEDIUM-SPECIFIC EXPOSURE POINT CONCENTRATION SUMMARY
REASONABLE MAXIMUM EXPOSURE
Site 49 RFI Report
NSWC - White Oak
Silver Spring, Maryland

Scenario Timeframe: Future
Medium: Groundwater
Exposure Medium: Groundwater

Exposure Point	Chemical of Potential Concern	Units	Arithmetic Mean	95% UCL of (N/T/NP)		Maximum Concentration (Qualifier)		Exposure Point Concentration			
								Value	Units	Statistic	Rationale
Bedrock Aquifer - Water in Excavation Pit	1,2-Dibromoethane	UG/L	7.47	33.2	NP	65.0	J	33.2	UG/L	97.5% Cheb-m	(3)
	Chloroform	UG/L	6.98	24.7	NP	37.0		24.7	UG/L	97.5% Cheb-m	(3)
	Tetrachloroethene	UG/L	4.73	17.5	NP	1.10	J	1.1	UG/L	Max	(5)
	Trichloroethene	UG/L	740	5,105	T	4,400		4,400	UG/L	Max	(5)
	Vinyl chloride	UG/L	5.40	17.8	NP	5.70	K	5.7	UG/L	Max	(5)
	cis-1,2-Dichloroethene	UG/L	168	1,460	T	1,100		1,100	UG/L	Max	(5)
	trans-1,2-Dichloroethene	UG/L	10.4	31.7	NP	46.0	K	31.7	UG/L	97.5% Cheb-m	(3)
	Aluminum	UG/L	6,973	57,538	T	35,600	J	35,600	UG/L	Max	(5)
	Arsenic	UG/L	2.92	7.13	NP	8.70	J	7.13	UG/L	95% Cheb-m	(3)
	Chromium	UG/L	138	1,284	T	910	J	910	UG/L	Max	(5)
	Copper	UG/L	31.3	203.0	T	166	J	203.0	UG/L	99% Cheb	(1)
	Iron	UG/L	13,672	258,830	T	72,400	J	72,400	UG/L	Max	(5)
	Manganese	UG/L	585	5,260	T	2,250	J	2,250	UG/L	Max	(5)
	Nickel	UG/L	103	650	T	625	J	625	UG/L	Max	(5)
	Vanadium	UG/L	13.2	56.5	NP	62.5	J	56.5	UG/L	97.5% Cheb-m	(3)

For non-detects, 1/2 sample quantitation limit was used as a proxy concentration; for duplicate sample results, the average of the two samples was used.

ProUCL, Version 2.1 used to determine distribution of data using the Shapiro-Wilk W Test. ProUCL used to calculate RME EPC, following recommendations based on distribution and standard deviation in users guide.

Statistics: Maximum Detected Value (Max); 95% UCL of Normal Data (95% UCL-N); 95% UCL of Log-transformed Data, H-Statistic (95% UCL-T); 95% Chebyshev (MVUE) UCL (95% Cheb); 99% Chebyshev (MVUE) UCL (99% Cheb); 95% Chebyshev (mean,std) UCL (95% Cheb-m); 97.5% Chebyshev (mean,std) UCL (97.5% Cheb-m); 99% Chebyshev (mean,std) UCL (99% Cheb-m).

(1) Shapiro-Wilk W Test indicates data are log-normally distributed.
(2) Shapiro-Wilks W Test indicates data are normally distributed.
(3) Shapiro-Wilks W Test indicates data neither log-normally or normally distributed. Use non-parametric RME EPC.
(4) Shapiro-Wilks W Test indicates data fit both log-normal and normal distribution. Select d[illegible]tion with higher W Test result.
(5) 95% UCL (or mean) exceeds maximum detected concentration. Therefore, maximum c[illegible]ation used for EPC.

N = Normal
T = Transformed
NP = Non-parametric
J = Estimated Value

05/13/2004
8:30

Table 3.2.RME
MEDIUM-SPECIFIC EXPOSURE POINT CONCENTRATION SUMMARY
REASONABLE MAXIMUM EXPOSURE
Site 49 RFI Report
NSWC - White Oak
Silver Spring, Maryland

Scenario Timeframe: Future
Medium: Groundwater
Exposure Medium: Air

Exposure Point	Chemical of Potential Concern	Units	Arithmetic Mean	95% UCL of (N/T/NP)		Maximum Concentration (Qualifier)		Exposure Point Concentration			
								Value	Units	Statistic	Rationale
Bedrock Aquifer - Water Vapors at Showerhead	1,2-Dibromoethane	UG/L	7.47	33.2	NP	65.0	J	33.2	UG/L	97.5% Cheb-m	(3)
	Chloroform	UG/L	6.98	24.7	NP	37.0		24.7	UG/L	97.5% Cheb-m	(3)
	Tetrachloroethene	UG/L	4.73	17.5	NP	1.10	J	1.1	UG/L	Max	(5)
	Trichloroethene	UG/L	740	3,519	T	4,400		3,519	UG/L	97.5% Cheb	(1)
	Vinyl chloride	UG/L	5.40	17.8	NP	5.70	K	5.7	UG/L	Max	(5)
	cis-1,2-Dichloroethene	UG/L	168	1,000	T	1,100		1,000	UG/L	97.5% Cheb	(1)
	trans-1,2-Dichloroethene	UG/L	10.4	31.7	NP	46.0	K	31.7	UG/L	97.5% Cheb-m	(3)
Bedrock Aquifer - Water Vapors at Excavation	1,2-Dibromoethane	UG/L	7.47	33.2	NP	65.0	J	33.2	UG/L	97.5% Cheb-m	(3)
	Chloroform	UG/L	6.98	24.7	NP	37.0		24.7	UG/L	97.5% Cheb-m	(3)
	Tetrachloroethene	UG/L	4.73	17.5	NP	1.10	J	1.1	UG/L	Max	(5)
	Trichloroethene	UG/L	740	3,519	T	4,400		3,519	UG/L	97.5% Cheb	(1)
	Vinyl chloride	UG/L	5.40	17.8	NP	5.70	K	5.7	UG/L	Max	(5)
	cis-1,2-Dichloroethene	UG/L	168	1,000	T	1,100		1,000	UG/L	97.5% Cheb	(1)
	trans-1,2-Dichloroethene	UG/L	10.4	31.7	NP	46.0	K	31.7	UG/L	97.5% Cheb-m	(3)

For non-detects, 1/2 sample quantitation limit was used as a proxy concentration; for duplicate sample results, the average of the two samples was used.
ProUCL, Version 2.1 used to determine distribution of data using the Shapiro-Wilk W Test. ProUCL used to calculate RME EPC, following recommendations based on distribution and standard deviation in users guide.
Statistics: Maximum Detected Value (Max); 95% UCL of Normal Data (95% UCL-N); 95% UCL of Log-transformed Data, H-Statistic (95% UCL-T); 95% Chebyshev (MVUE) UCL (95% Cheb); 99% Chebyshev (MVUE) UCL (99% Cheb); 95% Chebyshev (mean,std) UCL (95% Cheb-m); 97.5% Chebyshev (mean,std) UCL (97.5% Cheb-m); 99% Chebyshev (mean,std) UCL (99% Cheb-m).

(1) Shapiro-Wilk W Test indicates data are log-normally distributed.
(2) Shapiro-Wilks W Test indicates data are normally distributed.
(3) Shapiro-Wilks W Test indicates data neither log-normally or normally distributed. Use non-parametric RME EPC.
(4) Shapiro-Wilks W Test indicates data fit both log-normal and normal distribution. Select distribution with higher W Test result.
(5) 95% UCL (or mean) exceeds maximum detected concentration. Therefore, maximum concentration used for EPC.

N = Normal
T = Transformed
NP = Non-parametric
J = Estimated Value

Table 3.1.CT
MEDIUM-SPECIFIC EXPOSURE POINT CONCENTRATION SUMMARY
CENTRAL TENDENCY
Site 49 RFI Report
NSWC - White Oak
Silver Spring, Maryland

Scenario Timeframe: Future
Medium: Groundwater
Exposure Medium: Groundwater

Exposure Point	Chemical of Potential Concern	Units	Arithmetic Mean	95% UCL of (N/T/NP)		Maximum Concentration (Qualifier)		Exposure Point Concentration			
								Value	Units	Statistic	Rationale
Bedrock Aquifer - Tap Water											
	1,2-Dibromoethane	UG/L	7.47	33.2	NP	65.0	J	1.39	UG/L	Mean-T	(4)
	Chloroform	UG/L	6.98	24.7	NP	37.0		1.79	UG/L	Mean-T	(4)
	Tetrachloroethene	UG/L	4.73	17.5	NP	1.10	J	1.19	UG/L	Mean-T	(4)
	Trichloroethene	UG/L	740	5,105	T	4,400		226	UG/L	Mean-T	(1)
	Vinyl chloride	UG/L	5.40	17.8	NP	5.70	K	1.92	UG/L	Mean-T	(4)
	cis-1,2-Dichloroethene	UG/L	168	1,460	T	1,100		47.9	UG/L	Mean-T	(1)
	trans-1,2-Dichloroethene	UG/L	10.4	31.7	NP	46.0	K	3.63	UG/L	Mean-T	(4)
	Aluminum	UG/L	726	4,943	NP	6,800		47.5	UG/L	Mean-T	(4)
	Chromium	UG/L	11	86.4	NP	75.5		1.43	UG/L	Mean-T	(4)
	Iron	UG/L	2,927	50,765	T	14,100		361	UG/L	Mean-T	(1)
	Manganese	UG/L	447	3,096	T	2,290		150	UG/L	Mean-T	(1)
	Nickel	UG/L	20	57.5	T	81.0		9.58	UG/L	Mean-T	(1)
	Vanadium	UG/L	3.36	16.7	NP	20.6	J	0.76	UG/L	Mean-T	(4)

Table 3.1.CT
MEDIUM-SPECIFIC EXPOSURE POINT CONCENTRATION SUMMARY
CENTRAL TENDENCY
Site 49 RFI Report
NSWC - White Oak
Silver Spring, Maryland

Scenario Timeframe: Future
Medium: Groundwater
Exposure Medium: Groundwater

Exposure Point	Chemical of Potential Concern	Units	Arithmetic Mean	95% UCL of (N/T/NP)		Maximum Concentration (Qualifier)		Exposure Point Concentration			
								Value	Units	Statistic	Rationale
Bedrock Aquifer - Water in Excavation Pit	1,2-Dibromoethane	UG/L	7.47	33.2	NP	65.0	J	1.39	UG/L	Mean-T	(4)
	Chloroform	UG/L	6.98	1.8	NP	37.0		1.79	UG/L	Mean-T	(4)
	Tetrachloroethene	UG/L	4.73	17.5	NP	1.10	J	1.19	UG/L	Mean-T	(4)
	Trichloroethene	UG/L	740	5,105	T	4,400		226	UG/L	Mean-T	(1)
	Vinyl chloride	UG/L	5.40	17.8	NP	5.70	K	1.92	UG/L	Mean-T	(4)
	cis-1,2-Dichloroethene	UG/L	168	1,460	T	1,100		47.9	UG/L	Mean-T	(1)
	trans-1,2-Dichloroethene	UG/L	10.4	31.7	NP	46.0	K	3.63	UG/L	Mean-T	(4)
	Aluminum	UG/L	6,973	57,538	T	35,600	J	652	UG/L	Mean-T	(1)
	Arsenic	UG/L	2.92	7.13	NP	8.70	J	2.03	UG/L	Mean-T	(4)
	Chromium	UG/L	138	1,284	T	910	J	14.9	UG/L	Mean-T	(4)
	Copper	UG/L	31.3	203.0	T	166	J	6.2	UG/L	Mean-T	(4)
	Iron	UG/L	13,672	258,830	T	72,400	J	1978	UG/L	Mean-T	(4)
	Manganese	UG/L	585	5,260	T	2,250	J	192	UG/L	Mean-T	(4)
	Nickel	UG/L	103	650	T	625	J	23.3	UG/L	Mean-T	(4)
	Vanadium	UG/L	13.2	56.5	NP	62.5	J	2.44	UG/L	Mean-T	(4)

W - Test: Developed by Shapiro and Wilk, refer to Supplemental Guidance to RAGS: Calculating the Concentration Term, OSWER Directive 9285.7-081, May 1992.
Options: Maximum Detected Value (Max); Mean of Log-transformed Data (Mean-T); Mean of Normal Data (Mean-N).

(1) Shapiro-Wilk W Test indicates data are log-normally distributed.
(2) Mean concentration exceeds maximum detected concentration. Therefore, maximum concentration used for EPC.
(3) Shapiro-Wilks W Test indicates data are normally distributed.
(4) Shapiro-Wilks W Test inconclusive. Use of mean (normal or transformed) that best fits the data according to the results of the Shapiro-Wilks W Test for EPC.

N = Normal
T = Transformed
NP = Non-parametric
J = Estimated Value

Table 3.2.CT
MEDIUM-SPECIFIC EXPOSURE POINT CONCENTRATION SUMMARY
CENTRAL TENDENCY
Site 49 RFI Report
NSWC - White Oak
Silver Spring, Maryland

Scenario Timeframe: Future
Medium: Groundwater
Exposure Medium: Air

Exposure Point	Chemical of *Potential* Concern	Units	Arithmetic Mean	95% UCL of (N/T/NP)		Maximum Concentration (*Qualifier*)		Exposure Point Concentration			
								Value	Units	Statistic	Rationale
Bedrock Aquifer - Water Vapors at Showerhead	1,2-Dibromoethane	UG/L	7.47	33.2	NP	65.0	J	1.39	UG/L	Mean-T	(4)
	Chloroform	UG/L	6.98	1.8	NP	37.0		1.79	UG/L	Mean-T	(4)
	Tetrachloroethene	UG/L	4.73	17.5	NP	1.10	J	1.19	UG/L	Mean-T	(4)
	Trichloroethene	UG/L	740	3,519	T	4,400		226	UG/L	Mean-T	(1)
	Vinyl chloride	UG/L	5.40	17.8	NP	5.70	K	1.92	UG/L	Mean-T	(4)
	cis-1,2-Dichloroethene	UG/L	168	1,000	T	1,100		47.9	UG/L	Mean-T	(1)
	trans-1,2-Dichloroethene	UG/L	10.4	31.7	NP	46.0	K	3.63	UG/L	Mean-T	(4)
Bedrock Aquifer - Water Vapors at Excavation	1,2-Dibromoethane	UG/L	7.47	33.2	NP	65.0	J	1.39	UG/L	Mean-T	(4)
	Chloroform	UG/L	6.98	1.8	NP	37.0		1.79	UG/L	Mean-T	(4)
	Tetrachloroethene	UG/L	4.73	17.5	NP	1.10	J	1.19	UG/L	Mean-T	(4)
	Trichloroethene	UG/L	740	3,519	T	4,400		226	UG/L	Mean-T	(1)
	Vinyl chloride	UG/L	5.40	17.8	NP	5.70	K	1.92	UG/L	Mean-T	(4)
	cis-1,2-Dichloroethene	UG/L	168	1,000	T	1,100		47.9	UG/L	Mean-T	(1)
	trans-1,2-Dichloroethene	UG/L	10.4	31.7	NP	46.0	K	3.63	UG/L	Mean-T	(4)

W - Test: Developed by Shapiro and Wilk, refer to Supplemental Guidance to RAGS: Calculating the Concentration Term, OSWER Directive 9285.7-081, May 1992.
Options: Maximum Detected Value (Max); Mean of Log-transformed Data (Mean-T); Mean of Normal Data (Mean-N).

(1) Shapiro-Wilk W Test indicates data are log-normally distributed.
(2) Mean concentration exceeds maximum detected concentration. Therefore, maximum concentration used for EPC.
(3) Shapiro-Wilks W Test indicates data are normally distributed.
(4) Shapiro-Wilks W Test inconclusive. Use of mean (normal or transformed) that best fits the data according to the results of the Shapiro-Wilks W Test for EPC.

N = Normal
T = Transformed
NP = Non-parametric
J = Estimated Value

TABLE 4.1.RME
VALUES USED FOR DAILY INTAKE CALCULATIONS
REASONABLE MAXIMUM EXPOSURE
Site 49 RFI Report
NSWC - White Oak
Silver Spring, Maryland

Scenario Timeframe: Future
Medium: Groundwater
Exposure Medium: Groundwater

Exposure Route	Receptor Population	Receptor Age	Exposure Point	Parameter Code	Parameter Definition	Value	Units	Rationale/ Reference	Intake Equation/ Model Name
Ingestion	Resident	Adult	Bedrock Aquifer - Tap Water	CW	Chemical Concentration in Water	See Table 3.1.RME	µg/l	See Table 3.1.RME	Chronic Daily Intake (CDI) (mg/kg-day) =
				IR-W	Ingestion Rate of Water	2	liters/day	EPA, 1997	CW x IR-W x EF x ED x CF1 x 1/BW x 1/AT
				EF	Exposure Frequency	350	days/year	EPA, 1991	
				ED	Exposure Duration	24	years	EPA, 1991	
				CF1	Conversion Factor 1	0.001	mg/µg	--	
				BW	Body Weight	70	kg	EPA, 1991	
				AT-C	Averaging Time (Cancer)	25,550	days	EPA, 1989	
				AT-N	Averaging Time (Non-Cancer)	8,760	days	EPA, 1989	
		Child	Bedrock Aquifer - Tap Water	CW	Chemical Concentration in Water	See Table 3.1.RME	µg/l	See Table 3.1.RME	CDI (mg/kg-day) =
				IR-W	Ingestion Rate of Water	1	liters/day	EPA, 1997	CW x IR-W x EF x ED x CF1 x 1/BW x 1/AT
				EF	Exposure Frequency	350	days/year	EPA, 1991	
				ED	Exposure Duration	6	years	EPA, 1991	
				CF1	Conversion Factor 1	0.001	mg/µg	--	
				BW	Body Weight	15	kg	EPA, 1991	
				AT-C	Averaging Time (Cancer)	25,550	days	EPA, 1989	
				AT-N	Averaging Time (Non-Cancer)	2,190	days	EPA, 1989	
		Child/Adult	Bedrock Aquifer - Tap Water	CW	Chemical Concentration in Water	See Table 3.1.RME	µg/l	See Table 3.1.RME	CDI (mg/kg-day) =
				IR-W-A	Ingestion Rate of Water, Adult	2	liters/day	EPA, 1997	CW x IR-W-Adj x EF x CF1 x 1/AT
				IR-W-C	Ingestion Rate of Water, Child	1	liters/day	EPA, 1997	
				IR-W-Adj	Ingestion Rate of Water, Age-adjusted	1.09	liter-year/kg-day	calculated	IR-W-Adj (liter-year/kd-day) =
				EF	Exposure Frequency	350	days/year	EPA, 1991	(ED-C x IR-W-C / BW-C) +
				ED-A	Exposure Duration, Adult	24	years	EPA, 1991	(ED-A x IR-W-A / BW-A)
				ED-C	Exposure Duration, Child	6	years	EPA, 1991	
				CF1	Conversion Factor 1	0.001	mg/µg	--	
				BW-A	Body Weight , Adult	70	kg	EPA, 1991	
				BW-C	Body Weight, Child	15	kg	EPA, 1991	
				AT-C	Averaging Time (Cancer)	25,550	days	EPA, 1989	

TABLE 4.1.RME

VALUES USED FOR DAILY INTAKE CALCULATIONS

REASONABLE MAXIMUM EXPOSURE

Site 49 RFI Report

NSWC - White Oak

Silver Spring, Maryland

Scenario Timeframe: Future
Medium: Groundwater
Exposure Medium: Groundwater

Exposure Route	Receptor Population	Receptor Age	Exposure Point	Parameter Code	Parameter Definition	Value	Units	Rationale/ Reference	Intake Equation/ Model Name
Dermal	Resident	Adult	Bedrock Aquifer - Tap Water	CW	Chemical Concentration in Water	See Table 3.1.RME	µg/l	See Table 3.1.RME	CDI (mg/kg-day) =
				DAevent	Dermally Absorbed Dose per Event	calculated	mg/cm²-event	calculated	DAevent x SA x EV x EF x ED x 1/BW x 1/AT
				FA	Fraction absorbed water	chemical specific	dimensionless	EPA, 2001	
				Kp	Permeability Coefficient	chemical specific	cm/hr	EPA, 2001	Inorganics: DAevent (mg/cm²-event) =
				τ	Lag Time	chemical specific	hr/event	EPA, 2001	Kp x CW x t_{event} x CF1 x CF2
				t*	Time to Reach Steady-state	chemical specific	hours	EPA, 2001	
				B	Ratio of Permeability of Stratum Corneum to Epidermis	chemical specific	dimensionless	EPA, 2001	Organics :
				t_{event}	Event Time	0.58	hr/event	EPA, 2001	t_{event}<t*: DAevent (mg/cm²-event) =
				SA	Skin Surface Area Available for Contact	18,000	cm²	EPA, 2001	2 x FA x Kp x CW x (sqrt((6 x τ x t_{event})/π))
				EV	Event Frequency	1	events/day	EPA, 2001	x CF1 x CF2
				EF	Exposure Frequency	350	days/year	EPA, 2001	
				ED	Exposure Duration	24	years	EPA, 2001	t_{event}>t*: DAevent (mg/cm²-event) =
				BW	Body Weight	70	kg	EPA, 1991	FA x Kp x CW x (t_{event}/(1+B) + 2 x τ x
				AT-C	Averaging Time (Cancer)	25,550	days	EPA, 1989	((1 + 3B + 3B²)/(1+B)²)) x CF1 x CF2
				AT-N	Averaging Time (Non-Cancer)	8,760	days	EPA, 1989	
				CF1	Conversion Factor 1	0.001	mg/µg	--	
				CF2	Conversion Factor 2	0.001	l/cm³	--	
		Child	Bedrock Aquifer - Tap Water	CW	Chemical Concentration in Water	See Table 3.1.RME	µg/l	See Table 3.1.RME	CDI (mg/kg-day) =
				DAevent	Dermally Absorbed Dose per Event	calculated	mg/cm²-event	calculated	DAevent x SA x EV x EF x ED x 1/BW x 1/AT
				FA	Fraction absorbed water	chemical specific	dimensionless	EPA, 2001	
				Kp	Permeability Coefficient	chemical specific	cm/hr	EPA, 2001	Inorganics: DAevent (mg/cm²-event) =
				τ	Lag Time	chemical specific	hr/event	EPA, 2001	Kp x CW x t_{event} x CF1 x CF2
				t*	Time to Reach Steady-state	chemical specific	hours	EPA, 2001	
				B	Ratio of Permeability of Stratum Corneum to Epidermis	chemical specific	dimensionless	EPA, 2001	Organics :
				t_{event}	Event Time	1.0	hr/event		t_{event}<t*: DAevent (mg/cm²-event) =
				SA	Skin Surface Area Available for Contact	6,600	cm²	EPA, 2001	2 x FA x Kp x CW x (sqrt((6 x τ x t_{event})/π))
				EV	Event Frequency	1	events/day	EPA, 2001	x CF1 x CF2
				EF	Exposure Frequency	350	days/year	EPA, 2001	
				ED	Exposure Duration	6	years	EPA, 2001	t_{event}>t*: DAevent (mg/cm²-event) =
				BW	Body Weight	15	kg	EPA, 1991	FA x Kp x CW x (t_{event}/(1+B) + 2 x τ x
				AT-C	Averaging Time (Cancer)	25,550	days	EPA, 1989	((1 + 3B + 3B²)/(1+B)²)) x CF1 x CF2
				AT-N	Averaging Time (Non-Cancer)	2190	days	EPA, 1989	
				CF1	Conversion Factor 1	0.001	mg/µg	--	
				CF2	Conversion Factor 2	0.001	l/cm³	--	

TABLE 4.1.RME

VALUES USED FOR DAILY INTAKE CALCULATIONS

REASONABLE MAXIMUM EXPOSURE

Site 49 RFI Report

NSWC - White Oak

Silver Spring, Maryland

Scenario Timeframe: Future
Medium: Groundwater
Exposure Medium: Groundwater

Exposure Route	Receptor Population	Receptor Age	Exposure Point	Parameter Code	Parameter Definition	Value	Units	Rationale/ Reference	Intake Equation/ Model Name
Dermal (continued)	Resident	Child/Adult	Bedrock Aquifer - Tap Water	CW	Chemical Concentration in Water	See Table 3.1.RME	µg/l	See Table 3.1.RME	CDI (mg/kg-day) = DA-Adj x EF x 1/AT
				DAevent-A	Dermally Absorbed Dose per Event, Adult	calculated	mg/cm^2-event	calculated	
				DAevent-C	Dermally Absorbed Dose per Event, Child	calculated	mg/cm^2-event	calculated	DA-Adj = (Daevent-A x SA-A x ED-A x 1/BW-A)
				DA-Adj	Dermally Absorbed Dose, Age-adjusted	calculated	mg-year/event-kg	calculated	+ (Daevent-C x SA-C x ED-C x 1/BW-C)
				FA	Fraction absorbed water	chemical specific	dimensionless	EPA, 2001	
				Kp	Permeability Coefficient	chemical specific	cm/hr	EPA, 2001	Inorganics: DAevent (mg/cm^2-event) =
				τ	Lag Time	chemical specific	hr/event	EPA, 2001	Kp x CW x t_{event} x CF1 x CF2
				t^*	Time to Reach Steady-state	chemical specific	hours	EPA, 2001	
				B	Ratio of Permeability of Stratum Corneum to Epidermis	chemical specific	dimensionless	EPA, 2001	Organics :
				t_{event}-A	Event Time, Adult	0.58	hr/event	EPA, 2001	$t_{event}<t^*$: DAevent (mg/cm^2-event) =
				t_{event}-C	Event Time, Child	1.0	hr/event	EPA, 2001	2 x FA x Kp x CW x (sqrt((6 x τ x t_{event})/π))
				SA-A	Skin Surface Area, Adult	18,000	cm^2	EPA, 2001	x CF1 x CF2
				SA-C	Skin Surface Area, Child	6,600	cm^2	EPA, 2001	
				EV	Event Frequency	1	events/day	EPA, 2001	$t_{event}>t^*$: DAevent (mg/cm^2-event) =
				EF	Exposure Frequency	350	days/year	EPA, 2001	FA x Kp x CW x (t_{event}/(1+B) + 2 x τ x
				ED-A	Exposure Duration, Adult	24	years	EPA, 2001	((1 + 3B + $3B^2$)/$(1+B)^2$)) x CF1 x CF2
				ED-C	Exposure Duration, Child	6	years	EPA, 2001	
				BW-A	Body Weight, Adult	70	kg	EPA, 1991	
				BW-C	Body Weight, Child	15	kg	EPA, 1991	
				AT-C	Averaging Time (Cancer)	25,550	days	EPA, 1989	
				CF1	Conversion Factor 1	0.001	mg/µg	--	
				CF2	Conversion Factor 2	0.001	l/cm^3	--	

TABLE 4.1.RME

VALUES USED FOR DAILY INTAKE CALCULATIONS

REASONABLE MAXIMUM EXPOSURE

Site 49 RFI Report

NSWC - White Oak

Silver Spring, Maryland

Scenario Timeframe: Future
Medium: Groundwater
Exposure Medium: Groundwater

Exposure Route	Receptor Population	Receptor Age	Exposure Point	Parameter Code	Parameter Definition	Value	Units	Rationale/ Reference	Intake Equation/ Model Name
Dermal (continued)	*Construction Worker*	*Adult*	*Bedrock Aquifer - Tap Water*	CW	Chemical Concentration in Water	see Table 3.1.RME	µg/l	See Table 3.1.RME	CDI (mg/kg-day) =
				DAevent	Dermally Absorbed Dose per Event	calculated	mg/cm^2-event	calculated	DAevent x SA x EV x EF x ED x 1/BW x 1/AT
				FA	Fraction absorbed water	chemical specific	dimensionless	EPA, 2001	
				Kp	Permeability Coefficient	chemical specific	cm/hr	EPA, 2001	Inorganics: DAevent (mg/cm^2-event) =
				τ	Lag Time	chemical specific	hr/event	EPA, 2001	Kp x CW x t_{event} x CF1 x CF2
				t*	Time to Reach Steady-state	chemical specific	hours	EPA, 2001	
				B	Ratio of Permeability of Stratum Corneum to Epidermis	chemical specific	dimensionless	EPA, 2001	Organics :
				t_{event}	Event Time	8	hr/day	(1)	t_{event}<t*: DAevent (mg/cm^2-event) =
				SA	Skin Surface Area Available for Contact	6,000	cm^2	EPA, 1997, (3)	2 x FA x Kp x CW x (sqrt((6 x τ x t_{event})/π))
				EV	Event Frequency	1	events/day	EPA, 2001	x CF1 x CF2
				EF	Exposure Frequency	125	days/year	(2)	
				ED	Exposure Duration	1	years	EPA, 1991	t_{event}>t*: DAevent (mg/cm^2-event) =
				BW	Body Weight	70	kg	EPA, 1991	FA x Kp x CW x (t_{event}/(1+B) + 2 x τ x
				AT-C	Averaging Time (Cancer)	25,550	days	EPA, 1989	((1 + 3B + $3B^2$)/$(1+B)^2$)) x CF1 x CF2
				AT-N	Averaging Time (Non-Cancer)	365	days	EPA, 1989	
				CF1	Conversion Factor 1	0.001	mg/µg	- -	
				CF2	Conversion Factor 2	0.001	l/cm^3	- -	

(1) Professional Judgement based on construction activities that would occur 8 hrs per day for the RME.

(2) Assumed duration of construction project may be 1/2 a year.

(3) Skin surface area in contact with groundwater assumed to be 30 percent of total surface area (hands, forearms, lower legs, and feet).

Sources:

EPA, 1989: Risk Assessment Guidance for Superfund. Vol.1: Human Health Evaluation Manual, Part A. OERR. EPA/540/1-89/002.

EPA, 1991: Risk Assessment Guidance for Superfund. Vol.1: Human Health Evaluation Manual - Supplemental Guidance, Standard Default Exposure Factors. Interim Final. OSWER Directive 9285.6-03.

EPA, 1997: Exposure Factors Handbook. EPA/600/P-95/002Fa.

EPA, 2001: Risk Assessment Guidance for Superfund. Vol.1: Human Health Evaluation Manual (Part E, Supplemental Guidance for Dermal Risk Assessment) Interim. EPA/540/R/99/005.

TABLE 4.2.RME
VALUES USED FOR DAILY INTAKE CALCULATIONS
REASONABLE MAXIMUM EXPOSURE
Site 49 RFI Report
NSWC - White Oak
Silver Spring, Maryland

Scenario Timeframe: Future
Medium: Groundwater
Exposure Medium: Air

Exposure Route	Receptor Population	Receptor Age	Exposure Point	Parameter Code	Parameter Definition	Value	Units	Rationale/ Reference	Intake Equation/ Model Name
Inhalation	Resident	Adult	Bedrock Aquifer- Water Vapors at Showerhead	CW	Chemical Concentration in Water	See Table 3.2.RME	µg/l	See Table 3.2.RME	Chronic Daily Intake (CDI) (mg/kg-day) =
				InhExp	Inhalation Exposure per Shower	calculated	mg/kg-shower		InhExp x EF x ED x 1/AT
				EF	Exposure Frequency	350	days/year	EPA, 1991	Foster & Chrostowski Shower Inhalation Model
				ED	Exposure Duration	24	years	EPA, 1991	for InhExp
				AT-C	Averaging Time (Cancer)	25,550	days	EPA, 1989	
				AT-N	Averaging Time (Non-Cancer)	8,760	days	EPA, 1989	
	Construction Worker	Adult	Bedrock Aquifer- Water Vapors at Excavation Pit	CW	Chemical Concentration in Water	See Table 3.2.RME	µg/l	See Table 3.2.RME	Chronic Daily Intake (CDI) (mg/kg-day) =
				CA	Chemical Concentration in Air	calculated	mg/m^3		CA x IN x ET x EF x ED x 1/BW x 1/AT
				IN	Inhalation Rate	2.5	m^3/hour	EPA, 1991	
				ET	Exposure Time	8	hr/day	(1)	CA calculated using two-film model
				EF	Exposure Frequency	125	days/year	(2)	
				ED	Exposure Duration	1	years	EPA, 1991	
				BW	Body Weight	70	kg	EPA, 1991	
				AT-C	Averaging Time (Cancer)	25,550	days	EPA, 1989	
				AT-N	Averaging Time (Non-Cancer)	365	days	EPA, 1989	

Notes:

(1) Professional Judgement based on construction activities that would occur 8 hrs per day for the RME.

(2) Assumed duration of construction project may be 1/2 a year.

Sources:

EPA, 1989: Risk Assessment Guidance for Superfund. Vol.1: Human Health Evaluation Manual, Part A. OERR. EPA/540/1-89/002.

EPA, 1991: Risk Assessment Guidance for Superfund. Vol.1: Human Health Evaluation Manual - Supplemental Guidance, Standard Default Exposure Factors. Interim Final. OSWER Directive 9285.6-03.

EPA, 1997: Exposure Factors Handbook. EPA/600/P-95/002Fa.

TABLE 4.1.CT

VALUES USED FOR DAILY INTAKE CALCULATIONS

CENTRAL TENDANCY

Site 49 RFI Report

NSWC - White Oak

Silver Spring, Maryland

Scenario Timeframe: Future
Medium: Groundwater
Exposure Medium: Groundwater

Exposure Route	Receptor Population	Receptor Age	Exposure Point	Parameter Code	Parameter Definition	Value	Units	Rationale/ Reference	Intake Equation/ Model Name
Ingestion	Resident	Adult	Bedrock Aquifer - Tap Water	CW	Chemical Concentration in Water	See Table 3.1.CT	µg/l	See Table 3.1.CT	Chronic Daily Intake (CDI) (mg/kg-day) =
				IR-W	Ingestion Rate of Water	1.4	liters/day	EPA, 1993	CW x IR-W x EF x ED x CF1 x 1/BW x 1/AT
				EF	Exposure Frequency	234	days/year	EPA, 1993	
				ED	Exposure Duration	9	years	EPA, 1993	
				CF1	Conversion Factor 1	0.001	mg/µg	--	
				BW	Body Weight	70	kg	EPA, 1991	
				AT-C	Averaging Time (Cancer)	25,550	days	EPA, 1989	
				AT-N	Averaging Time (Non-Cancer)	3,285	days	EPA, 1989	
		Child	Bedrock Aquifer - Tap Water	CW	Chemical Concentration in Water	See Table 3.1.CT	µg/l	See Table 3.1.CT	CDI (mg/kg-day) =
				IR-W	Ingestion Rate of Water	1	liters/day	EPA, 1997	CW x IR-W x EF x ED x CF1 x 1/BW x 1/AT
				EF	Exposure Frequency	234	days/year	EPA, 1993	
				ED	Exposure Duration	6	years	EPA, 1991	
				CF1	Conversion Factor 1	0.001	mg/µg	--	
				BW	Body Weight	15	kg	EPA, 1991	
				AT-C	Averaging Time (Cancer)	25,550	days	EPA, 1989	
				AT-N	Averaging Time (Non-Cancer)	2,190	days	EPA, 1989	
		Child/Adult	Bedrock Aquifer - Tap Water	CW	Chemical Concentration in Water	See Table 3.1.CT	µg/l	See Table 3.1.CT	CDI (mg/kg-day) =
				IR-W-A	Ingestion Rate of Water, Adult	1.4	liters/day	EPA, 1993	CW x IR-W-Adj x EF x CF1 x 1/AT
				IR-W-C	Ingestion Rate of Water, Child	1	liters/day	EPA, 1997	
				IR-W-Adj	Ingestion Rate of Water, Age-adjusted	0.58	liter-year/kg-day	calculated	IR-W-Adj (liter-year/kd-day) =
				EF	Exposure Frequency	234	days/year	EPA, 1993	(ED-C x IR-W-C / BW-C) +
				ED-A	Exposure Duration, Adult	9	years	EPA, 1993	(ED-A x IR-W-A / BW-A)
				ED-C	Exposure Duration, Child	6	years	EPA, 1991	
				CF1	Conversion Factor 1	0.001	mg/µg	--	
				BW-A	Body Weight , Adult	70	kg	EPA, 1991	
				BW-C	Body Weight, Child	15	kg	EPA, 1991	
				AT-C	Averaging Time (Cancer)	25,550	days	EPA, 1989	

TABLE 4.1.CT

VALUES USED FOR DAILY INTAKE CALCULATIONS

CENTRAL TENDANCY

Site 49 RFI Report

NSWC - White Oak

Silver Spring, Maryland

Scenario Timeframe: Future
Medium: Groundwater
Exposure Medium: Groundwater

Exposure Route	Receptor Population	Receptor Age	Exposure Point	Parameter Code	Parameter Definition	Value	Units	Rationale/ Reference	Intake Equation/ Model Name
Dermal	Resident	Adult	Bedrock Aquifer - Tap Water	CW	Chemical Concentration in Water	See Table 3.1.CT	µg/l	See Table 3.1.CT	CDI (mg/kg-day) =
				DAevent	Dermally Absorbed Dose per Event	calculated	mg/cm^2-event	calculated	DAevent x SA x EV x EF x ED x 1/BW x 1/AT
				FA	Fraction absorbed water	chemical specific	dimensionless	EPA, 2001	
				Kp	Permeability Coefficient	chemical specific	cm/hr	EPA, 2001	Inorganics: DAevent (mg/cm^2-event) =
				τ	Lag Time	chemical specific	hr/event	EPA, 2001	Kp x CW x t_{event} x CF1 x CF2
				t*	Time to Reach Steady-state	chemical specific	hours	EPA, 2001	
				B	Ratio of Permeability of Stratum Corneum to Epidermis	chemical specific	dimensionless	EPA, 2001	Organics :
				t_{event}	Event Time	0.25	hr/event	EPA, 2001	t_{event}<t*: DAevent (mg/cm^2-event) =
				SA	Skin Surface Area Available for Contact	18,000	cm^2	EPA, 2001	2 x FA x Kp x CW x (sqrt((6 x τ x t_{event})/π))
				EV	Event Frequency	1	events/day	EPA, 2001	x CF1 x CF2
				EF	Exposure Frequency	234	days/year	EPA, 1993	
				ED	Exposure Duration	9	years	EPA, 2001	t_{event}>t*: DAevent (mg/cm^2-event) =
				BW	Body Weight	70	kg	EPA, 1991	FA x Kp x CW x (t_{event}/(1+B) + 2 x τ x
				AT-C	Averaging Time (Cancer)	25,550	days	EPA, 1989	((1 + 3B + 3B^2)/(1+B)^2)) x CF1 x CF2
				AT-N	Averaging Time (Non-Cancer)	3,285	days	EPA, 1989	
				CF1	Conversion Factor 1	0.001	mg/µg	--	
				CF2	Conversion Factor 2	0.001	l/cm^3	--	
		Child	Bedrock Aquifer - Tap Water	CW	Chemical Concentration in Water	See Table 3.1.CT	µg/l	See Table 3.1.CT	CDI (mg/kg-day) =
				DAevent	Dermally Absorbed Dose per Event	calculated	mg/cm^2-event	calculated	DAevent x SA x EV x EF x ED x 1/BW x 1/AT
				FA	Fraction absorbed water	chemical specific	dimensionless	EPA, 2001	
				Kp	Permeability Coefficient	chemical specific	cm/hr	EPA, 2001	Inorganics: DAevent (mg/cm^2-event) =
				τ	Lag Time	chemical specific	hr/event	EPA, 2001	Kp x CW x t_{event} x CF1 x CF2
				t*	Time to Reach Steady-state	chemical specific	hours	EPA, 2001	
				B	Ratio of Permeability of Stratum Corneum to Epidermis	chemical specific	dimensionless	EPA, 2001	Organics :
				t_{event}	Event Time	0.33	hr/event		t_{event}<t*: DAevent (mg/cm^2-event) =
				SA	Skin Surface Area Available for Contact	6,600	cm^2	EPA, 2001	2 x FA x Kp x CW x (sqrt((6 x τ x t_{event})/π))
				EV	Event Frequency	1	events/day	EPA, 2001	x CF1 x CF2
				EF	Exposure Frequency	234	days/year	EPA, 1993	
				ED	Exposure Duration	6	years	EPA, 2001	t_{event}>t*: DAevent (mg/cm^2-event) =
				BW	Body Weight	15	kg	EPA, 1991	FA x Kp x CW x (t_{event}/(1+B) + 2 x τ x
				AT-C	Averaging Time (Cancer)	25,550	days	EPA, 1989	((1 + 3B + 3B^2)/(1+B)^2)) x CF1 x CF2
				AT-N	Averaging Time (Non-Cancer)	2190	days	EPA, 1989	
				CF1	Conversion Factor 1	0.001	mg/µg	--	
				CF2	Conversion Factor 2	0.001	l/cm^3	--	

TABLE 4.1.CT

VALUES USED FOR DAILY INTAKE CALCULATIONS

CENTRAL TENDANCY

Site 49 RFI Report

NSWC - White Oak

Silver Spring, Maryland

Scenario Timeframe: Future
Medium: Groundwater
Exposure Medium: Groundwater

Exposure Route	Receptor Population	Receptor Age	Exposure Point	Parameter Code	Parameter Definition	Value	Units	Rationale/ Reference	Intake Equation/ Model Name
Dermal (continued)	Resident	Child/Adult	Bedrock Aquifer - Tap Water	CW	Chemical Concentration in Water	See Table 3.4.CT	µg/l	See Table 3.4.CT	CDI (mg/kg-day) = DA-Adj x EF x 1/AT
				DAevent-A	Dermally Absorbed Dose per Event, Adult	calculated	mg/cm^2-event	calculated	
				DAevent-C	Dermally Absorbed Dose per Event, Child	calculated	mg/cm^2-event	calculated	DA-Adj = (Daevent-A x SA-A x ED-A x 1/BW-A)
				DA-Adj	Dermally Absorbed Dose, Age-adjusted	calculated	mg-year/event-kg	calculated	+ (Daevent-C x SA-C x ED-C x 1/BW-C)
				FA	Fraction absorbed water	chemical specific	dimensionless	EPA, 2001	
				Kp	Permeability Coefficient	chemical specific	cm/hr	EPA, 2001	Inorganics: DAevent (mg/cm^2-event) =
				τ	Lag Time	chemical specific	hr/event	EPA, 2001	Kp x CW x t_{event} x CF1 x CF2
				t^*	Time to Reach Steady-state	chemical specific	hours	EPA, 2001	
				B	Ratio of Permeability of Stratum Corneum to Epidermis	chemical specific	dimensionless	EPA, 2001	Organics :
				t_{event}-A	Event Time, Adult	0.25	hr/event	EPA, 2001	$t_{event}<t^*$: DAevent (mg/cm^2-event) =
				t_{event}-C	Event Time, Child	0.33	hr/event	EPA, 2001	2 x FA x Kp x CW x (sqrt((6 x τ x t_{event})/π))
				SA-A	Skin Surface Area, Adult	18,000	cm^2	EPA, 2001	x CF1 x CF2
				SA-C	Skin Surface Area, Child	6,600	cm^2	EPA, 2001	
				EV	Event Frequency	1	events/day	EPA, 2001	$t_{event}>t^*$: DAevent (mg/cm^2-event) =
				EF	Exposure Frequency	234	days/year	EPA, 1993	FA x Kp x CW x (t_{event}/(1+B) + 2 x τ x
				ED-A	Exposure Duration, Adult	9	years	EPA, 2001	((1 + 3B + $3B^2$)/$(1+B)^2$)) x CF1 x CF2
				ED-C	Exposure Duration, Child	6	years	EPA, 2001	
				BW-A	Body Weight, Adult	70	kg	EPA, 1991	
				BW-C	Body Weight, Child	15	kg	EPA, 1991	
				AT-C	Averaging Time (Cancer)	25,550	days	EPA, 1989	
				CF1	Conversion Factor 1	0.001	mg/µg	--	
				CF2	Conversion Factor 2	0.001	l/cm^3	--	

TABLE 4.1.CT

VALUES USED FOR DAILY INTAKE CALCULATIONS

CENTRAL TENDANCY

Site 49 RFI Report

NSWC - White Oak

Silver Spring, Maryland

Scenario Timeframe: Future
Medium: Groundwater
Exposure Medium: Groundwater

Exposure Route	Receptor Population	Receptor Age	Exposure Point	Parameter Code	Parameter Definition	Value	Units	Rationale/ Reference	Intake Equation/ Model Name
Dermal (continued)	Construction Worker	Adult	Bedrock Aquifer - Tap Water	CW	Chemical Concentration in Water	See Table 3.4.CT	µg/l	See Table 3.4.CT	CDI (mg/kg-day) =
				DAevent	Dermally Absorbed Dose per Event	calculated	mg/cm^2-event	calculated	DAevent x SA x EV x EF x ED x 1/BW x 1/AT
				FA	Fraction absorbed water	chemical specific	dimensionless	EPA, 2001	
				Kp	Permeability Coefficient	chemical specific	cm/hr	EPA, 2001	Inorganics: DAevent (mg/cm^2-event) =
				τ	Lag Time	chemical specific	hr/event	EPA, 2001	Kp x CW x t_{event} x CF1 x CF2
				t^*	Time to Reach Steady-state	chemical specific	hours	EPA, 2001	
				B	Ratio of Permeability of Stratum Corneum to Epidermis	chemical specific	dimensionless	EPA, 2001	Organics :
				t_{event}	Event Time	4	hr/day	(1)	$t_{event}<t^*$: DAevent (mg/cm^2-event) =
				SA	Skin Surface Area Available for Contact	6,000	cm^2	EPA, 1997, (3)	2 x FA x Kp x CW x (sqrt((6 x τ x t_{event})/π))
				EV	Event Frequency	1	events/day	EPA, 2001	x CF1 x CF2
				EF	Exposure Frequency	125	days/year	(2)	
				ED	Exposure Duration	1	years	EPA, 1991	$t_{event}>t^*$: DAevent (mg/cm^2-event) =
				BW	Body Weight	70	kg	EPA, 1991	FA x Kp x CW x (t_{event}/(1+B) + 2 x τ x
				AT-C	Averaging Time (Cancer)	25,550	days	EPA, 1989	((1 + 3B + $3B^2$)/$(1+B)^2$)) x CF1 x CF2
				AT-N	Averaging Time (Non-Cancer)	365	days	EPA, 1989	
				CF1	Conversion Factor 1	0.001	mg/µg	--	
				CF2	Conversion Factor 2	0.001	l/cm^3	--	

(1) Professional judgement assuming 1/2 RME value for CT.

(2) Assumed duration of construction project may be 1/2 a year.

(3) Skin surface area in contact with groundwater assumed to be 30 percent of total surface area (hands, forearms, lower legs, and feet).

Sources:

EPA, 1989: Risk Assessment Guidance for Superfund, Vol.1: Human Health Evaluation Manual, Part A. OERR. EPA/540/1-89/002.

EPA, 1991: Risk Assessment Guidance for Superfund, Vol.1: Human Health Evaluation Manual - Supplemental Guidance, Standard Default Exposure Factors. Interim Final. OSWER Directive 9285.6-03.

EPA, 1993: Superfund's Standard Default Exposure Factors for the Central Tendency and Reasonable Maximum Exposure.

EPA, 1997: Exposure Factors Handbook. EPA/600/P-95/002Fa.

EPA, 2001: Risk Assessment Guidance for Superfund. Vol.1: Human Health Evaluation Manual (Part E, Supplemental Guidance for Dermal Risk Assessment) Interim. EPA/540/R/99/005.

TABLE 4.2.CT

VALUES USED FOR DAILY INTAKE CALCULATIONS

CENTRAL TENDANCY

Site 49 RFI Report

NSWC - White Oak

Silver Spring, Maryland

Scenario Timeframe: Future
Medium: Groundwater
Exposure Medium: Air

Exposure Route	Receptor Population	Receptor Age	Exposure Point	Parameter Code	Parameter Definition	Value	Units	Rationale/ Reference	Intake Equation/ Model Name
Inhalation	Resident	Adult	Upper Aquifer- Water Vapors at showerhead	CW	Chemical Concentration in Water	See Table 3.2.CT	µg/l	See Table 3.2.CT	Chronic Daily Intake (CDI) (mg/kg-day) =
				InhExp	Inhalation Exposure per Shower	calculated	mg/kg-shower		InhExp x EF x ED x 1/AT
				EF	Exposure Frequency	234	days/year	EPA, 1993	Foster & Chrostowski Shower Inhalation Model
				ED	Exposure Duration	9	years	EPA, 1993	for InhExp
				AT-C	Averaging Time (Cancer)	25,550	days	EPA, 1989	
				AT-N	Averaging Time (Non-Cancer)	3,285	days	EPA, 1989	
	Construction Worker	Adult	Upper Aquifer- Water Vapors at Excavation Pit	CW	Chemical Concentration in Water	See Table 3.2.CT	µg/l	See Table 3.2.CT	Chronic Daily Intake (CDI) (mg/kg-day) =
				CA	Chemical Concentration in Air	calculated	mg/m^3		CA x IN x ET x EF x ED x 1/BW x 1/AT
				IN	Inhalation Rate	2.5	m^3/hour	EPA, 1991	
				ET	Exposure Time	4	hr/day	(1)	CA calculated using two-film model
				EF	Exposure Frequency	125	days/year	(2)	
				ED	Exposure Duration	1	years	EPA, 1991	
				BW	Body Weight	70	kg	EPA, 1991	
				AT-C	Averaging Time (Cancer)	25,550	days	EPA, 1989	
				AT-N	Averaging Time (Non-Cancer)	365	days	EPA, 1989	

Notes:

(1) Professional Judgement assuming 1/2 the RME value for the CT.

(2) Assumed duration of construction project may be 1/2 a year.

Sources:

EPA, 1989: *Risk Assessment Guidance for Superfund. Vol.1: Human Health Evaluation Manual, Part A.* OERR. EPA/540/1-89/002.

EPA, 1991: Risk Assessment Guidance for Superfund. Vol.1: Human Health Evaluation Manual - Supplemental Guidance, Standard Default Exposure Factors. Interim Final. OSWER Directive 9285.6-03.

EPA, 1993: Superfund's Standard Default Exposure Factors for the Central Tendency and Reasonable Maximum Exposure.

EPA, 1997: Exposure Factors Handbook. EPA/600/P-95/002Fa.

TABLE 5.1
NON-CANCER TOXICITY DATA -- ORAL/DERMAL
Site 49 RFI Report
NSWC White oak
Silver Spring, Maryland

Chemical of Potential Concern	Chronic/ Subchronic	Oral RfD		Oral Absorption Efficiency for Dermal (1)	Absorbed RfD for Dermal (2)		Primary Target Organ(s)	Combined Uncertainty/Modifying Factors	RfD:Target Organ(s)	
		Value	Units		Value	Units			Source(s)	Date(s) (MM/DD/YYYY)
Aluminum	Chronic	1.0E+00	mg/kg-day	NA	1.0E+00	mg/kg-day	Central Nervous System	100	NCEA	06/21/2001
Arsenic	Chronic	3.0E-04	mg/kg-day	0.95	3.0E-04	mg/kg-day	Skin, Vascular	3/1	IRIS	04/11/2003
Arsenic	Subchronic	3.0E-04	mg/kg-day	0.95	3.0E-04	mg/kg-day	Skin, Vascular	3	HEAST	07/01/1997
Chloroform	Chronic	1.0E-02	mg/kg-day	NA	1.0E-02	mg/kg-day	Liver	1000	IRIS	04/11/2003
Chloroform	Subchronic	1.0E-02	mg/kg-day	NA	1.0E-02	mg/kg-day	Liver	1000	HEAST	07/01/1997
Chromium (VI)	Chronic	3.0E-03	mg/kg-day	0.025	7.5E-05	mg/kg-day	NOAEL	300/3	IRIS	04/11/2003
Chromium (VI)	Subchronic	2.0E-02	mg/kg-day	0.025	5.0E-04	mg/kg-day	NOAEL	100	HEAST	07/01/1997
Copper	Chronic	4.0E-02	mg/kg-day	NA	4.0E-02	mg/kg-day	Gastrointestinal	NA	HEAST	07/01/1997
Copper	Subchronic	4.0E-02	mg/kg-day	NA	4.0E-02	mg/kg-day	Gastrointestinal	NA	HEAST	07/01/1997
1,2-Dibromoethane	NA	NA	NA	NA	NA	NA	NA	NA	NA	NA
Dichloroethylene-1,2 cis	Chronic	1.0E-02	mg/kg-day	NA	1.0E-02	mg/kg-day	Blood	3000	HEAST	07/01/1997
Dichloroethylene-1,2 cis	Subchronic	1.0E-01	mg/kg-day	NA	1.0E-01	mg/kg-day	Blood	300	HEAST	07/01/1997
Dichloroethylene-1,2 trans	Chronic	2.0E-02	mg/kg-day	NA	2.0E-02	mg/kg-day	Blood	1000	IRIS	04/11/2003
Dichloroethylene-1,2 trans	Subchronic	2.0E-01	mg/kg-day	NA	2.0E-01	mg/kg-day	Blood	100	HEAST	07/01/1997
Iron	Chronic	3.0E-01	mg/kg-day	NA	3.0E-01	mg/kg-day	Gastrointestinal	1	NCEA	06/21/01
Lead	NA	NA	NA	NA	NA	NA	NA	NA	NA	NA
Manganese (non-food)	Chronic	2.0E-02	mg/kg-day	0.04	8.0E-04	mg/kg-day	Central Nervous System	1	IRIS	04/11/2003
Nickel, Soluble Salts	Chronic	2.0E-02	mg/kg-day	0.04	8.0E-04	mg/kg-day	Decreased Weight	300/1	IRIS	04/11/2003
Nickel, Soluble Salts	Subchronic	2.0E-02	mg/kg-day	0.04	8.0E-04	mg/kg-day	Decreased Weight	300	HEAST	07/01/1997
Tetrachloroethylene	Chronic	1.0E-02	mg/kg-day	NA	1.0E-02	mg/kg-day	Liver, Weight Gain	1000/1	IRIS	04/11/2003
Tetrachloroethylene	Subchronic	1.0E-01	mg/kg-day	NA	1.0E-01	mg/kg-day	Liver	100	IRIS	04/11/2003
Trichloroethylene	Chronic	6.0E-03	mg/kg-day	NA	6.0E-03	mg/kg-day	Liver, Kidney, Fetus	3000	NCEA	1997
Vanadium	Chronic	1.0E-03	mg/kg-day	0.026	2.6E-05	mg/kg-day	Kidney	100	NCEA	05/01/2000
Vinyl chloride	Chronic	3.0E-03	mg/kg-day	NA	3.0E-03	mg/kg-day	Liver	30/1	IRIS	04/11/2003

TABLE 5.1
NON-CANCER TOXICITY DATA -- ORAL/DERMAL
Site 49 RFI Report
NSWC White oak
Silver Spring, Maryland

Chemical of Potential Concern	Chronic/ Subchronic	Oral RfD		Oral Absorption Efficiency for Dermal (1)	Absorbed RfD for Dermal (2)		Primary Target Organ(s)	Combined Uncertainty/Modifying Factors	RfD:Target Organ(s)	
		Value	Units		Value	Units			Source(s)	Date(s) (MM/DD/YYYY)

Footnote Instructions:

(1) *Source: Risk Assessment Guidance for Superfund. Volume 1: Human Health* Evalution Manual (Part E, Supplemental Guidance for Dermal Risk Assessment (Interim). Section 4.2 and Exhibit 4-1. USEPA recommends that the oral RfD should not be adjusted to estimate the absorbed dose for compounds when the absorption efficiency is greater than 50%. Constituents that do not have oral absorption efficiencies reported on this table were assumed to have an oral absorption efficiency of 100%.

(2) See Risk Assessment text for the derivation of the "Absorbed RfD for Dermal"

Definitions:

NA = Not Available

IRIS = Integrated Risk Information System

HEAST = Health Effects Summary Tables

NCEA = National Center for Environmental Assessment

TABLE 5.2

NON-CANCER TOXICITY DATA -- INHALATION

Site 49 RFI Report

NSWC White Oak

Silver Spring, Maryland

Chemical of Potential Concern	Chronic/ Subchronic	Inhalation RfC		Extrapolated RfD (1)		Primary Target Organ(s)	Combined Uncertainty/Modifying Factors	RfC : Target Organ(s)	
		Value	Units	Value	Units			Source(s)	Date(s) (MM/DD/YYYY)
Aluminum	Chronic	5.0E-03	mg/m3	1.4E-03	mg/kg/day	CNS	300	NCEA	08/13/1999
Arsenic	NA	NA	NA	NA	NA	NA	NA	NA	NA
Chloroform	Chronic	4.9E-02	mg/m3	1.4E-02	mg/kg/day	Liver, Kidney	10	NCEA	12/01/1997
Chromium (VI)	Chronic	8.0E-06	mg/m3	2.2E-06	mg/kg/day	Nasal	300	IRIS	04/11/2003
Copper	NA	NA	NA	NA	NA	NA	NA	NA	NA
1,2-Dibromoethane	Chronic	2.00E-04	mg/m3	5.7E-05	mg/kg/day	Sperm	1E+03	HEAST	7/1997
1,2-Dibromoethane	Subchronic	2.00E-03	mg/m3	5.7E-04	mg/kg/day	Sperm	1E+02	HEAST	7/1997
Dichloroethylene-1,2 cis	NA	NA	NA	NA	NA	NA	NA	NA	NA
Dichloroethylene-1,2 trans	NA	NA	NA	NA	NA	NA	NA	NA	NA
Iron	NA	NA	NA	NA	NA	NA	NA	NA	NA
Manganese (non-food)	Chronic	5.0E-05	mg/m3	1.4E-05	mg/kg/day	Central Nervous System	1000/1	IRIS	04/11/2003
Nickel	NA	NA	NA	NA	NA	NA	NA	NA	NA
Tetrachloroethylene	Chronic	4.9E-01	mg/m3	1.4E-01	mg/kg/day	Liver, Whole Body	NA	NCEA	10/1999
Trichloroethylene	NA	NA	NA	NA	NA	NA	NA	NA	NA
Vanadium	NA	NA	NA	NA	NA	NA	NA	NA	NA
Vinyl chloride	Chronic	9.8E-02	mg/m3	2.8E-02	mg/kg/day	Liver	30/1	IRIS	04/11/2003

(1) See Risk Assessment text for the derivation of the "Extrapolated RfD".

Definitions: NA = Not Available

IRIS = Integrated Risk Information System

HEAST = Health Effects Summary Tables

NCEA = National Center for Environmental Assessment

TABLE 6.1

CANCER TOXICITY DATA -- ORAL/DERMAL

Site 49 RFI Report

NSWC White Oak

Silver Spring, Maryland

Chemical of Potential Concern	Oral Cancer Slope Factor		Oral Absorption Efficiency for Dermal (1)	Absorbed Cancer Slope Factor for Dermal		Weight of Evidence/ Cancer Guideline Description	Oral CSF	
	Value	Units		Value	Units		Source(s)	Date(s) (MM/DD/YYYY)
Aluminum	NA	NA	NA	NA	NA	NA	NA	NA
Arsenic	1.5E+00	1/mg/kg-day	0.95	1.5E+00	1/mg/kg-day	A	IRIS	04/14/2003
Chloroform	NA	NA	NA	NA	NA	NA	NA	NA
Chromium (VI)	NA	NA	NA	NA	NA	D	IRIS	04/14/2003
Copper	NA	NA	NA	NA	NA	D	IRIS	04/14/2003
1,2-Dibromoethane	8.5E+01	1/mg/kg-day	NA	8.5E+01	1/mg/kg-day	B2	IRIS	04/14/2003
Dichloroethylene-1,2 cis	NA	NA	NA	NA	NA	D	IRIS	04/14/2003
Dichloroethylene-1,2 trans	NA	NA	NA	NA	NA	D	IRIS	04/14/2003
Iron	NA	NA	NA	NA	NA	NA	NA	NA
Lead	NA	NA	NA	NA	NA	B2	IRIS	04/14/2003
Manganese	NA	NA	NA	NA	NA	D	IRIS	04/14/2003
Nickel	NA	NA	NA	NA	NA	NA	NA	NA
Tetrachloroethylene	5.4E-01	1/mg/kg-day	NA	5.4E-01	1/mg/kg-day		NCEA	
Trichloroethylene	1.1E-02	1/mg/kg-day	NA	1.1E-02	1/mg/kg-day	B1	NCEA	1997
Vanadium	NA	NA	NA	NA	NA	NA	NA	NA
Vinyl chloride (from birth)	1.4E+00	1/mg/kg-day	NA	1.4E+00	1/mg/kg-day	A	IRIS	04/14/2003
Vinyl chloride (adult)	7.2E-01	1/mg/kg-day	NA	7.2E-01	1/mg/kg-day	A	IRIS	04/14/2003

(1) Source: Risk Assessment Guidance for Superfund. Volume 1: Human Health Evalution Manual (Part E, Supplemental Guidance for Dermal Risk Assessment (Interim). Section 4.2 and Exhibit 4-1. USEPA recommends that the oral RfD should not be adjusted to estimate the absorbed dose for compounds when the absorption efficiency is greater than 50%. Constituents that do not have oral absorption efficiencies reported on this table

Definitions:

NA = Not Available

IRIS = Integrated Risk Information System

HEAST = Health Effects Summary Tables

NCEA = National Center for Environmental Assessment

TABLE 6.2

CANCER TOXICITY DATA -- INHALATION

Site 49 RFI Report

NSWC White oak

Silver Spring, Maryland

Chemical of Potential Concern	Unit Risk		Inhalation Cancer Slope Factor		Weight of Evidence/ Cancer Guideline Description	Unit Risk : Inhalation CSF	
	Value	Units	Value	Units		Source(s)	Date(s) (MM/DD/YYYY)
Aluminum	NA	NA	NA	NA	NA	NA	NA
Arsenic	4.3E-03	1/ug/m3	1.5E+01	1/mg/kg-day	A	IRIS	04/14/2003
Chloroform	2.3E-05	1/ug/m3	8.1E-02	1/mg/kg-day	B2	IRIS	04/14/2003
Chromium (VI)	1.2E-02	1/ug/m3	4.1E+01	1/mg/kg-day	A	IRIS	04/14/2003
Copper	NA	NA	NA	NA	D	IRIS	04/14/2003
1,2-Dibromoethane	1.2E-02	1/ug/m3	7.6E-01	1/mg/kg-day	B2	IRIS	04/14/2003
Dichloroethylene-1,2 cis	NA	NA	NA	NA	D	IRIS	04/14/2003
Dichloroethylene-1,2 trans	NA	NA	NA	NA	NA	NA	NA
Iron	NA	NA	NA	NA	NA	NA	NA
Lead	NA	NA	NA	NA	B2	IRIS	04/14/2003
Manganese	NA	NA	NA	NA	D	IRIS	04/14/2003
Nickel, Refinery Dust	2.4E-04	1/ug/m3	8.4E-01	1/mg/kg-day	A	IRIS	04/14/2003
Tetrachloroethylene	5.7E-06	1/ug/m3	2.0E-02	1/mg/kg-day		NCEA	
Trichloroethylene	1.7E-06	1/ug/m3	6.0E-03	1/mg/kg-day	B1	NCEA	1997
Vanadium	NA	NA	NA	NA	NA	NA	NA
Vinyl chloride (from birth)	8.8E-06	1/ug/m3	3.1E-02	1/mg/kg-day	A	IRIS	04/14/2003
Vinyl chloride (adult)	4.4E-06	1/ug/m3	1.5E-02	1/mg/kg-day	A	IRIS	04/14/2003

Definitions:

NA = Not Available

IRIS = Integrated Risk Information System

HEAST = Health Effects Summary Tables

NCEA = National Center for Environmental Assessment

TABLE 7.1.RME
CALCULATION OF CHEMICAL CANCER RISKS AND NON-CANCER HAZARDS
REASONABLE MAXIMUM EXPOSURE
Site 49 RFI Report
NSWC - White Oak
Silver Spring, Maryland

Scenario Timeframe: Future
Receptor Population: Resident
Receptor Age: Adult

Medium	Exposure Medium	Exposure Point	Exposure Route	Chemical of Potential Concern	EPC		Cancer Risk Calculations					Non-Cancer Hazard Calculations				
					Value	Units	Intake/Exposure Concentration		CSF/Unit Risk		Cancer Risk	Intake/Exposure Concentration		RfD/RfC		Hazard Quotient
							Value	Units	Value	Units		Value	Units	Value	Units	
Groundwater	Groundwater	Bedrock Aquifer - Tap Water	Ingestion	1,2-Dibromoethane	3.3E+01	ug/L	NA	NA	NA	NA	NA	9.1E-04	ug/L	NA	NA	NA
				Chloroform	2.5E+01	ug/L	NA	NA	NA	NA	NA	6.8E-04	ug/L	1.0E-02	mg/kg/day	6.8E-02
				Tetrachloroethene	1.1E+00	ug/L	NA	NA	NA	NA	NA	3.0E-05	ug/L	1.0E-02	mg/kg/day	3.0E-03
				Trichloroethene	4.4E+03	ug/L	NA	NA	NA	NA	NA	1.2E-01	ug/L	6.0E-03	mg/kg/day	2.0E+01
				Vinyl chloride	5.7E+00	ug/L	NA	NA	NA	NA	NA	1.6E-04	ug/L	3.0E-03	mg/kg/day	5.2E-02
				cis-1,2-Dichloroethene	1.1E+03	ug/L	NA	NA	NA	NA	NA	3.0E-02	ug/L	1.0E-02	mg/kg/day	3.0E+00
				trans-1,2-Dichloroethene	3.2E+01	ug/L	NA	NA	NA	NA	NA	8.7E-04	ug/L	2.0E-02	mg/kg/day	4.3E-02
				Aluminum	4.9E+03	ug/L	NA	NA	NA	NA	NA	1.4E-01	ug/L	1.0E+00	mg/kg/day	1.4E-01
				Chromium	7.6E+01	ug/L	NA	NA	NA	NA	NA	2.1E-03	ug/L	3.0E-03	mg/kg/day	6.9E-01
				Iron	1.4E+04	ug/L	NA	NA	NA	NA	NA	3.9E-01	ug/L	3.0E-01	mg/kg/day	1.3E+00
				Manganese	2.3E+03	ug/L	NA	NA	NA	NA	NA	6.3E-02	ug/L	2.0E-02	mg/kg/day	3.1E+00
				Nickel	5.7E+01	ug/L	NA	NA	NA	NA	NA	1.6E-03	ug/L	2.0E-02	mg/kg/day	7.9E-02
				Vanadium	1.7E+01	ug/L	NA	NA	NA	NA	NA	4.6E-04	ug/L	1.0E-03	mg/kg/day	4.6E-01
			Exp. Route Total								0.0E+00					2.9E+01
Groundwater	Groundwater	Bedrock Aquifer - Tap Water	Dermal	1,2-Dibromoethane	3.3E+01	ug/L	NA	NA	NA	NA	NA	3.9E-05	ug/L	NA	NA	NA
				Chloroform	2.5E+01	ug/L	NA	NA	NA	NA	NA	6.2E-05	ug/L	1.0E-02	mg/kg/day	6.2E-03
				Tetrachloroethene	1.1E+00	ug/L	NA	NA	NA	NA	NA	1.8E-05	ug/L	1.0E-02	mg/kg/day	1.8E-03
				Trichloroethene	4.4E+03	ug/L	NA	NA	NA	NA	NA	2.1E-02	ug/L	6.0E-03	mg/kg/day	3.5E+00
				Vinyl chloride	5.7E+00	ug/L	NA	NA	NA	NA	NA	1.4E-05	ug/L	3.0E-03	mg/kg/day	4.6E-03
				cis-1,2-Dichloroethene	1.1E+03	ug/L	NA	NA	NA	NA	NA	2.7E-03	ug/L	1.0E-02	mg/kg/day	2.7E-01
				trans-1,2-Dichloroethene	3.2E+01	ug/L	NA	NA	NA	NA	NA	7.7E-05	ug/L	2.0E-02	mg/kg/day	3.9E-03
				Aluminum	4.9E+03	ug/L	NA	NA	NA	NA	NA	7.1E-04	ug/L	1.0E+00	mg/kg/day	7.1E-04
				Chromium	7.6E+01	ug/L	NA	NA	NA	NA	NA	2.2E-05	ug/L	7.5E-05	mg/kg/day	2.9E-01
				Iron	1.4E+04	ug/L	NA	NA	NA	NA	NA	2.0E-03	ug/L	3.0E-01	mg/kg/day	6.7E-03
				Manganese	2.3E+03	ug/L	NA	NA	NA	NA	NA	3.3E-04	ug/L	8.0E-04	mg/kg/day	4.1E-01
				Nickel	5.7E+01	ug/L	NA	NA	NA	NA	NA	1.6E-06	ug/L	8.0E-04	mg/kg/day	2.1E-03
				Vanadium	1.7E+01	ug/L	NA	NA	NA	NA	NA	2.4E-06	ug/L	2.6E-05	mg/kg/day	9.2E-02
			Exp. Route Total								0.0E+00					4.6E+00
		Exposure Point Total									0.0E+00					3.4E+01
	Exposure Medium Total										0.0E+00					3.4E+01

TABLE 7.1.RME

CALCULATION OF CHEMICAL CANCER RISKS AND NON-CANCER HAZARDS

REASONABLE MAXIMUM EXPOSURE

Site 49 RFI Report

NSWC - White Oak

Silver Spring, Maryland

Scenario Timeframe: Future
Receptor Population: Resident
Receptor Age: Adult

Medium	Exposure Medium	Exposure Point	Exposure Route	Chemical of Potential Concern	EPC		Cancer Risk Calculations					Non-Cancer Hazard Calculations				
					Value	Units	Intake/Exposure Concentration		CSF/Unit Risk		Cancer Risk	Intake/Exposure Concentration		RfD/RfC		Hazard Quotient
							Value	Units	Value	Units		Value	Units	Value	Units	
Groundwater	Air	*Bedrock Aquifer - Water* Vapors at Showerhead	Inhalation	1,2-Dibromoethane	9.8E-07	mg/m^3	NA	NA	NA	NA	NA	9.4E-07	mg/kg/day	5.7E-05	mg/kg/day	1.6E-02
				Chloroform	1.3E-06	mg/m^3	NA	NA	NA	NA	NA	1.3E-06	mg/kg/day	1.4E-02	mg/kg/day	9.1E-05
				Tetrachloroethene	5.5E-08	mg/m^3	NA	NA	NA	NA	NA	5.3E-08	mg/kg/day	1.4E-01	mg/kg/day	3.8E-07
				Trichloroethene	2.4E-04	mg/m^3	NA	NA	NA	NA	NA	2.3E-04	mg/kg/day	NA	NA	NA
				Vinyl chloride	4.1E-07	mg/m^3	NA	NA	NA	NA	NA	3.9E-07	mg/kg/day	2.8E-02	mg/kg/day	1.4E-05
				cis-1,2-Dichloroethene	6.6E-05	mg/m^3	NA	NA	NA	NA	NA	6.4E-05	mg/kg/day	NA	NA	NA
				trans-1,2-Dichloroethene	1.9E-06	mg/m^3	NA	NA	NA	NA	NA	1.8E-06	mg/kg/day	NA	NA	NA
			Exp. Route Total								0.0E+00					1.7E-02
		Exposure Point Total									0.0E+00					1.7E-02
	Exposure Medium Total										0.0E+00					1.7E-02
Groundwater - Bedrock Aquifer Total											0.0E+00					3.4E+01
							Total of Receptor Risks Across All Media				0.0E+00	Total of Receptor Hazards Across All Media				3.4E+01

Notes-
DAevent for exposure to groundwater calculated on Table G-7.1.RME Supplement A.
EPC for inhalation of volatiles from groundwater from shower calculated on Table G-7.1.RME Supplement B.

Table 7.1.RME Supplement A
Calculation of DAevent
Adult Resident, Bedrock Aquifer Groundwater
Site 49 RFI Report
NSWC - White Oak
Silver Spring, Maryland

Chemical of Potential Concern	Groundwater Water Concentration (CW) (µg/L)	Permeability Coefficient (Kp) (cm/hr)	B (dimensionless)	Lag Time (τ_{event}) (hr)	t* (hr)	Fraction Absorbed Water (FA) (dimensionless)	Duration of Event (tevent) (hr)	DAevent (mg/cm²-event)	Eq
1,2-Dibromoethane	3.3E+01	2.0E-03	1.1E-02	1.2E+00	2.8E+00	1.0E+00	0.58	1.6E-07	2
Chloroform	2.5E+01	6.8E-03	2.9E-02	5.0E-01	1.2E+00	1.0E+00	0.58	2.5E-07	2
Tetrachloroethylene	1.1E+00	3.3E-02	1.6E-01	9.1E-01	2.2E+00	1.0E+00	0.58	7.3E-08	2
Trichloroethylene	4.4E+03	1.2E-02	5.3E-02	5.8E-01	1.4E+00	1.0E+00	0.58	8.5E-05	2
Vinyl chloride	5.7E+00	5.6E-03	1.7E-02	2.4E-01	5.7E-01	1.0E+00	0.58	5.6E-08	3
cis-1,2-Dichloroethene	1.1E+03	7.7E-03	2.9E-02	3.7E-01	8.9E-01	1.0E+00	0.58	1.1E-05	2
trans-1,2-Dichloroethene	3.2E+01	7.7E-03	2.9E-02	3.7E-01	8.9E-01	1.0E+00	0.58	3.1E-07	2
Aluminum	4.9E+03	1.0E-03	NA	NA	NA	NA	0.58	2.9E-06	1
Chromium	7.6E+01	2.0E-03	NA	NA	NA	NA	0.58	8.8E-08	1
Iron	1.4E+04	1.0E-03	NA	NA	NA	NA	0.58	8.2E-06	1
Manganese	2.3E+03	1.0E-03	NA	NA	NA	NA	0.58	1.3E-06	1
Nickel	5.7E+01	2.0E-04	NA	NA	NA	NA	0.58	6.7E-09	1
Vanadium	1.7E+01	1.0E-03	NA	NA	NA	NA	0.58	9.7E-09	2

Inorganics: DAevent (mg/cm2-event) =
Kp x CW x tevent x 0.001 mg/ug x 0.001 l/cm^3 (eq 1)

Organics: DAevent (mg/cm2-event) =
tevent<t*: DAevent (mg/cm2-event) =
2 x FA x Kp x CW x (sqrt((6 x τ_{event} x tevent)/π)) x 0.001 mg/ug x 0.001 l/cm^3 (eq 2)

tevent>t*: DAevent (mg/cm2-event) =
FA x Kp x CW x (tevent/(1+B) + 2 x τ_{event} x ((1 + 3xB + 3xB^2)/(1+B)^2) x 0.001 mg/ug x 0.001 l/cm3 (eq 3)

Notes:
Permeability constants from EPA 2001, Risk Assessment Guidance for Superfund Volume I: Human Health Evaluation Manual (Part E, Supplemental Guidance for Dermal Risk Assessment). EPA/540/R/99/005.
NA - not applicable.

Table 7.1.RME Supplement B
Inhalation Exposure Concentrations from Foster and Chrostowski Shower Model
Site 49 RFI Report
NSWC - White Oak
Silver Spring, Maryland

Chemical	Exposure Point Concentration Cwo (mg/l)	Molecular weight (HH) (g/mole)	Henry's Law Constant (H) (atm-m^3/mole)	Kg (VOC) (cm/hr)	Kl(VOC) (cm/hr)	KL (cm/hr)	Kal (cm/hr)	Cwd (mg/l)	S (mg/m^3-min)	Calculated Inhalation Exposure (Einh) (mg/kg/shower)
1,2-Dibromoethane	3.3E-02	1.9E+02	3.20E-04	9.2E+02	9.6E+00	5.4E+00	7.3E+00	7.2E-03	4.8E-02	**9.8E-07**
Chloroform	2.5E-02	1.2E+02	2.87E-03	1.2E+03	1.2E+01	1.1E+01	1.5E+01	9.8E-03	6.5E-02	**1.3E-06**
Tetrachloroethene	1.1E-03	1.7E+02	2.59E-02	9.9E+02	1.0E+01	1.0E+01	1.4E+01	4.1E-04	2.7E-03	**5.5E-08**
Trichloroethene	4.4E+00	1.3E+02	1.03E-02	1.1E+03	1.2E+01	1.1E+01	1.5E+01	1.8E+00	1.2E+01	**2.4E-04**
Vinyl Chloride	5.7E-03	6.3E+01	8.19E-02	1.6E+03	1.7E+01	1.7E+01	2.3E+01	3.0E-03	2.0E-02	**4.1E-07**
cis-1,2-Dichloroethene	1.1E+00	9.7E+01	7.58E-03	1.3E+03	1.3E+01	1.3E+01	1.8E+01	4.9E-01	3.3E+00	**6.6E-05**
trans-1,2-Dichloroethene	3.2E-02	9.7E+01	6.56E-03	1.3E+03	1.3E+01	1.3E+01	1.8E+01	1.4E-02	9.3E-02	**1.9E-06**

Variables	Units	Exposure Assumptions
Kg(VOC) = gas-film mass transfer coefficient	cm/hr	Solved by Eq 1
Kl(VOC) = liquid-film mass transfer coefficient	cm/hr	Solved by Eq 2
KL = overall mass transfer coefficient	cm/hr	Solved by Eq 3
Kal = adjusted overall mass transfer coeff.	cm/hr	Solved by Eq 4
Tl = Calibration temp. of water	K (20C +273)	293
Ts = Shower water temperature	k (45C)	318
Us = water viscosity at Ts	centipoise	0.596
Ul = water viscosity at Tl	cp	1.002
Cwd = conc. leaving droplets after time sdt	ug/l	Solved by Eq 5
sdt = shower droplet drop time	sec	2
d = shower droplet diameter	mm	1
FR = shower water flow rate	l/min	20
SV = shower room air volume	m^3	3
S = indoor VOC generation rate	ug/m^3-min	Solved by Eq 6
VR = ventilation rate	l/min	13.8
Variables	**Units**	**Exposure Assumptions**
BW = body weight	kg	70
Ds = duration of shower	min	12
Dt = total duration in shower room	min	15
R = air exchange rate	min^{-1}	0.0083
Ca = indoor air concentration of VOCs	ug/m^3	Solved by Eq 7
Einh = inhalation exposure per shower	mg/kg/shower	Solved by Eq 8

Equation 1:	Kg(VOC) =	$3000 * (18 / HH)^{0.5}$
Equation 2:	Kl(VOC) =	$20 * (44 / HH)^{0.5}$
Equation 3:	KL =	$((1 / Kl(VOC)) + (0.024 / (Kg (VOC) * H)))^{-1}$
Equation 4:	Kal =	$(KL * (((Tl * Us) / (Ts * Ul))^{-0.5}))$
Equation 5:	Cwd =	(Cwo * (1-EXP((-1 * Kal * sdt)/(60 * d))))
Equation 6:	S =	(Cwd * FR / SV)
Equation 7:	see time series example on Table I-GW-5	
Equation 8:	**Einh =**	**If t>Ds** (((VR * S) / (BW * R * 1000000)) * ((Ds + (EXP(-R * Dt) / R)-(EXP(R * (Ds - Dt))) / R)))

Henry's Law Constant from USEPA's *Superfund Public Health Evaluation Manual.* USEPA/540/1-86/060, October 1986.

TABLE 7.2.RME
CALCULATION OF CHEMICAL CANCER RISKS AND NON-CANCER HAZARDS
REASONABLE MAXIMUM EXPOSURE
Site 49 RFI Report
NSWC - White Oak
Silver Spring, Maryland

Scenario Timeframe: Future
Receptor Population: Resident
Receptor Age: Child

Medium	Exposure Medium	Exposure Point	Exposure Route	Chemical of Potential Concern	EPC		Cancer Risk Calculations					Non-Cancer Hazard Calculations				
					Value	Units	Intake/Exposure Concentration		CSF/Unit Risk		Cancer Risk	Intake/Exposure Concentration		RfD/RfC		Hazard Quotient
							Value	Units	Value	Units		Value	Units	Value	Units	
Groundwater	Groundwater	Bedrock Aquifer - Tap Water	Ingestion	1,2-Dibromoethane	3.3E+01	ug/L	NA	NA	NA	NA	NA	2.1E-03	ug/L	NA	NA	NA
				Chloroform	2.5E+01	ug/L	NA	NA	NA	NA	NA	1.6E-03	ug/L	1.0E-02	mg/kg/day	1.6E-01
				Tetrachloroethene	1.1E+00	ug/L	NA	NA	NA	NA	NA	7.0E-05	ug/L	1.0E-02	mg/kg/day	7.0E-03
				Trichloroethene	4.4E+03	ug/L	NA	NA	NA	NA	NA	2.8E-01	ug/L	6.0E-03	mg/kg/day	4.7E+01
				Vinyl chloride	5.7E+00	ug/L	NA	NA	NA	NA	NA	3.6E-04	ug/L	3.0E-03	mg/kg/day	1.2E-01
				cis-1,2-Dichloroethene	1.1E+03	ug/L	NA	NA	NA	NA	NA	7.0E-02	ug/L	1.0E-02	mg/kg/day	7.0E+00
				trans-1,2-Dichloroethene	3.2E+01	ug/L	NA	NA	NA	NA	NA	2.0E-03	ug/L	2.0E-02	mg/kg/day	1.0E-01
				Aluminum	4.9E+03	ug/L	NA	NA	NA	NA	NA	3.2E-01	ug/L	1.0E+00	mg/kg/day	3.2E-01
				Chromium	7.6E+01	ug/L	NA	NA	NA	NA	NA	4.8E-03	ug/L	3.0E-03	mg/kg/day	1.6E+00
				Iron	1.4E+04	ug/L	NA	NA	NA	NA	NA	9.0E-01	ug/L	3.0E-01	mg/kg/day	3.0E+00
				Manganese	2.3E+03	ug/L	NA	NA	NA	NA	NA	1.5E-01	ug/L	2.0E-02	mg/kg/day	7.3E+00
				Nickel	5.7E+01	ug/L	NA	NA	NA	NA	NA	3.7E-03	ug/L	2.0E-02	mg/kg/day	1.8E-01
				Vanadium	1.7E+01	ug/L	NA	NA	NA	NA	NA	1.1E-03	ug/L	1.0E-03	mg/kg/day	1.1E+00
			Exp. Route Total								0.0E+00					6.8E+01
Groundwater	Groundwater	Bedrock Aquifer - Tap Water	Dermal	1,2-Dibromoethane	3.3E+01	ug/L	NA	NA	NA	NA	NA	8.6E-05	ug/L	NA	NA	NA
				Chloroform	2.5E+01	ug/L	NA	NA	NA	NA	NA	1.4E-04	ug/L	1.0E-02	mg/kg/day	1.4E-02
				Tetrachloroethene	1.1E+00	ug/L	NA	NA	NA	NA	NA	4.0E-05	ug/L	1.0E-02	mg/kg/day	4.0E-03
				Trichloroethene	4.4E+03	ug/L	NA	NA	NA	NA	NA	4.7E-02	ug/L	6.0E-03	mg/kg/day	7.8E+00
				Vinyl chloride	5.7E+00	ug/L	NA	NA	NA	NA	NA	4.1E-05	ug/L	3.0E-03	mg/kg/day	1.4E-02
				cis-1,2-Dichloroethene	1.1E+03	ug/L	NA	NA	NA	NA	NA	6.0E-03	ug/L	1.0E-02	mg/kg/day	6.0E-01
				trans-1,2-Dichloroethene	3.2E+01	ug/L	NA	NA	NA	NA	NA	1.7E-04	ug/L	2.0E-02	mg/kg/day	8.7E-03
				Aluminum	4.9E+03	ug/L	NA	NA	NA	NA	NA	2.1E-03	ug/L	1.0E+00	mg/kg/day	2.1E-03
				Chromium	7.6E+01	ug/L	NA	NA	NA	NA	NA	6.4E-05	ug/L	7.5E-05	mg/kg/day	8.5E-01
				Iron	1.4E+04	ug/L	NA	NA	NA	NA	NA	5.9E-03	ug/L	3.0E-01	mg/kg/day	2.0E-02
				Manganese	2.3E+03	ug/L	NA	NA	NA	NA	NA	9.7E-04	ug/L	8.0E-04	mg/kg/day	1.2E+00
				Nickel	5.7E+01	ug/L	NA	NA	NA	NA	NA	4.8E-06	ug/L	8.0E-04	mg/kg/day	6.1E-03
				Vanadium	1.7E+01	ug/L	NA	NA	NA	NA	NA	7.1E-06	ug/L	2.6E-05	mg/kg/day	2.7E-01
			Exp. Route Total								0.0E+00					1.1E+01
		Exposure Point Total									0.0E+00					7.9E+01
	Exposure Medium Total										0.0E+00					7.9E+01
Groundwater - Bedrock Aquifer Total											0.0E+00					7.9E+01
							Total of Receptor Risks Across All Media				0.0E+00	Total of Receptor Hazards Across All Media				7.9E+01

Notes-
DAevent for exposure to groundwater calculated on Table G-7.2.RME Supplement A.

Table 7.2.RME Supplement A
Calculation of DAevent
Child Resident, Bedrock Aquifer Groundwater
Site 49 RFI Report
NSWC - White Oak
Silver Spring, Maryland

Chemical of Potential Concern	Groundwater Water Concentration (CW) (µg/L)	Permeability Coefficient (Kp) (cm/hr)	B (dimensionless)	Lag Time (τ_{event}) (hr)	t* (hr)	Fraction Absorbed Water (FA) (dimensionless)	Duration of Event (tevent) (hr)	DAevent (mg/cm²-event)	Eq
1,2-Dibromoethane	3.3E+01	2.0E-03	1.1E-02	1.2E+00	2.8E+00	1.0E+00	1	2.0E-07	2
Chloroform	2.5E+01	6.8E-03	2.9E-02	5.0E-01	1.2E+00	1.0E+00	1	3.3E-07	2
Tetrachloroethylene	1.1E+00	3.3E-02	1.6E-01	9.1E-01	2.2E+00	1.0E+00	1	9.6E-08	2
Trichloroethylene	4.4E+03	1.2E-02	5.3E-02	5.8E-01	1.4E+00	1.0E+00	1	1.1E-04	2
Vinyl chloride	5.7E+00	5.6E-03	1.7E-02	2.4E-01	5.7E-01	1.0E+00	1	9.6E-08	3
cis-1,2-Dichloroethene	1.1E+03	7.7E-03	2.9E-02	3.7E-01	8.9E-01	1.0E+00	1	1.4E-05	3
trans-1,2-Dichloroethene	3.2E+01	7.7E-03	2.9E-02	3.7E-01	8.9E-01	1.0E+00	1	4.1E-07	3
Aluminum	4.9E+03	1.0E-03	NA	NA	NA	NA	1	4.9E-06	1
Chromium	7.6E+01	2.0E-03	NA	NA	NA	NA	1	1.5E-07	1
Iron	1.4E+04	1.0E-03	NA	NA	NA	NA	1	1.4E-05	1
Manganese	2.3E+03	1.0E-03	NA	NA	NA	NA	1	2.3E-06	1
Nickel	5.7E+01	2.0E-04	NA	NA	NA	NA	1	1.1E-08	1
Vanadium	1.7E+01	1.0E-03	NA	NA	NA	NA	1	1.7E-08	1

Inorganics: DAevent (mg/cm2-event) =
Kp x CW x tevent x 0.001 mg/ug x 0.001 l/cm^3 (eq 1)

Organics: DAevent (mg/cm2-event) =
tevent<t*: DAevent (mg/cm2-event) =
2 x FA x Kp x CW x (sqrt((6 x τ_{event} x tevent)/π)) x 0.001 mg/ug x 0.001 l/cm^3 (eq 2)

tevent>t*: DAevent (mg/cm2-event) =
FA x Kp x CW x (tevent/(1+B) + 2 x τ_{event} x ((1 + 3xB + 3xB^2)/(1+B)^2) x 0.001 mg/ug x 0.001 l/cm3 (eq 3)

Notes:
Permeability constants from EPA 2001, Risk Assessment Guidance for Superfund Volume I: Human Health Evaluation Manual (Part E, Supplemental Guidance for Dermal Risk Assessment). EPA/540/R/99/005.
NA - not applicable.

TABLE 7.3.RME

CALCULATION OF CHEMICAL CANCER RISKS AND NON-CANCER HAZARDS

REASONABLE MAXIMUM EXPOSURE

Site 49 RFI Report

NSWC - White Oak

Silver Spring, Maryland

Scenario Timeframe: Future
Receptor Population: Resident
Receptor Age: Child/Adult

Medium	Exposure Medium	Exposure Point	Exposure Route	Chemical of Potential Concern	EPC		Cancer Risk Calculations					Non-Cancer Hazard Calculations				
					Value	Units	Intake/Exposure Concentration		CSF/Unit Risk		Cancer Risk	Intake/Exposure Concentration		RfD/RfC		Hazard Quotient
							Value	Units	Value	Units		Value	Units	Value	Units	
Groundwater	Groundwater	Bedrock Aquifer - Tap Water	Ingestion	1,2-Dibromoethane	3.3E+01	ug/L	5.0E-04	ug/L	8.5E+01	1/mg/kg/day	4.2E-02	NA	NA	NA	NA	NA
				Chloroform	2.5E+01	ug/L	3.7E-04	ug/L	NA	NA	NA	NA	NA	NA	NA	NA
				Tetrachloroethene	1.1E+00	ug/L	1.6E-05	ug/L	5.4E-01	1/mg/kg/day	8.9E-06	NA	NA	NA	NA	NA
				Trichloroethene	4.4E+03	ug/L	6.6E-02	ug/L	1.1E-02	1/mg/kg/day	7.2E-04	NA	NA	NA	NA	NA
				Vinyl chloride	5.7E+00	ug/L	4.6E-04	ug/L	7.2E-01	1/mg/kg/day	3.3E-04	NA	NA	NA	NA	NA
				cis-1,2-Dichloroethene	1.1E+03	ug/L	1.6E-02	ug/L	NA	NA	NA	NA	NA	NA	NA	NA
				trans-1,2-Dichloroethene	3.2E+01	ug/L	4.7E-04	ug/L	NA	NA	NA	NA	NA	NA	NA	NA
				Aluminum	4.9E+03	ug/L	7.4E-02	ug/L	NA	NA	NA	NA	NA	NA	NA	NA
				Chromium	7.6E+01	ug/L	1.1E-03	ug/L	NA	NA	NA	NA	NA	NA	NA	NA
				Iron	1.4E+04	ug/L	2.1E-01	ug/L	NA	NA	NA	NA	NA	NA	NA	NA
				Manganese	2.3E+03	ug/L	3.4E-02	ug/L	NA	NA	NA	NA	NA	NA	NA	NA
				Nickel	5.7E+01	ug/L	8.6E-04	ug/L	NA	NA	NA	NA	NA	NA	NA	NA
				Vanadium	1.7E+01	ug/L	2.5E-04	ug/L	NA	NA	NA					
			Exp. Route Total								4.3E-02					0.0E+00
Groundwater	Groundwater	Bedrock Aquifer - Tap Water	Dermal	1,2-Dibromoethane	3.3E+01	ug/L	9.7E-04	ug/L	8.5E+01	1/mg/kg/day	7.9E-02	NA	NA	NA	NA	NA
				Chloroform	2.5E+01	ug/L	1.6E-03	ug/L	NA	NA	NA	NA	NA	NA	NA	NA
				Tetrachloroethene	1.1E+00	ug/L	4.5E-04	ug/L	5.4E-01	1/mg/kg/day	2.4E-04	NA	NA	NA	NA	NA
				Trichloroethene	4.4E+03	ug/L	5.3E-01	ug/L	1.1E-02	1/mg/kg/day	5.8E-03	NA	NA	NA	NA	NA
				Vinyl chloride	5.7E+00	ug/L	5.1E-05	ug/L	7.2E-01	1/mg/kg/day	3.6E-05	NA	NA	NA	NA	NA
				cis-1,2-Dichloroethene	1.1E+03	ug/L	6.7E-02	ug/L	NA	NA	NA	NA	NA	NA	NA	NA
				trans-1,2-Dichloroethene	3.2E+01	ug/L	1.9E-03	ug/L	NA	NA	NA	NA	NA	NA	NA	NA
				Aluminum	4.9E+03	ug/L	1.8E-02	ug/L	NA	NA	NA	NA	NA	NA	NA	NA
				Chromium	7.6E+01	ug/L	5.5E-04	ug/L	NA	NA	NA	NA	NA	NA	NA	NA
				Iron	1.4E+04	ug/L	5.1E-02	ug/L	NA	NA	NA	NA	NA	NA	NA	NA
				Manganese	2.3E+03	ug/L	8.3E-03	ug/L	NA	NA	NA	NA	NA	NA	NA	NA
				Nickel	5.7E+01	ug/L	4.2E-05	ug/L	NA	NA	NA	NA	NA	NA	NA	NA
				Vanadium	1.7E+01	ug/L	6.0E-05	ug/L	NA	NA	NA					
			Exp. Route Total								8.5E-02					0.0E+00
		Exposure Point Total									1.3E-01					0.0E+00
	Exposure Medium Total										1.3E-01					0.0E+00

TABLE 7.3.RME

CALCULATION OF CHEMICAL CANCER RISKS AND NON-CANCER HAZARDS

REASONABLE MAXIMUM EXPOSURE

Site 49 RFI Report

NSWC - White Oak

Silver Spring, Maryland

Scenario Timeframe: Future
Receptor Population: Resident
Receptor Age: Child/Adult

Medium	Exposure Medium	Exposure Point	Exposure Route	Chemical of Potential Concern	EPC		Cancer Risk Calculations					Non-Cancer Hazard Calculations				
					Value	Units	Intake/Exposure Concentration		CSF/Unit Risk		Cancer Risk	Intake/Exposure Concentration		RfD/RfC		Hazard Quotient
							Value	Units	Value	Units		Value	Units	Value	Units	
Groundwater	Air	Bedrock Aquifer - Water Vapors at Showerhead	Inhalation	1,2-Dibromoethane	9.8E-07	mg/m^3	3.2E-07	mg/kg/day	7.6E-01	1/mg/kg/day	2.4E-07	NA	NA	NA	NA	NA
				Chloroform	1.3E-06	mg/m^3	4.4E-07	mg/kg/day	8.1E-02	1/mg/kg/day	3.5E-08	NA	NA	NA	NA	NA
				Tetrachloroethene	5.5E-08	mg/m^3	1.8E-08	mg/kg/day	2.0E-02	1/mg/kg/day	3.6E-10	NA	NA	NA	NA	NA
				Trichloroethene	2.4E-04	mg/m^3	7.9E-05	mg/kg/day	6.0E-03	1/mg/kg/day	4.7E-07	NA	NA	NA	NA	NA
				Vinyl chloride	4.1E-07	mg/m^3	1.3E-07	mg/kg/day	1.5E-02	1/mg/kg/day	2.0E-09	NA	NA	NA	NA	NA
				cis-1,2-Dichloroethene	6.6E-05	mg/m^3	2.2E-05	mg/kg/day	NA	NA	NA	NA	NA	NA	NA	NA
				trans-1,2-Dichloroethene	1.9E-06	mg/m^3	6.3E-07	mg/kg/day	NA	NA	NA	NA	NA	NA	NA	NA
			Exp. Route Total								7.5E-07					0.0E+00
		Exposure Point Total									7.5E-07					0.0E+00
	Exposure Medium Total										7.5E-07					0.0E+00
Groundwater - Bedrock Aquifer Total											1.3E-01					0.0E+00
							Total of Receptor Risks Across All Media				1.3E-01	Total of Receptor Hazards Across All Media				0.0E+00

Notes-
DAevent for exposure to groundwater calculated on Table G-7.2.RME Supplement A.

TABLE 7.4.RME

CALCULATION OF CHEMICAL CANCER RISKS AND NON-CANCER HAZARDS

REASONABLE MAXIMUM EXPOSURE

Site 49 RFI Report

NSWC - White Oak

Silver Spring, Maryland

Scenario Timeframe: Future
Receptor Population: Construction Worker
Receptor Age: Adult

Medium	Exposure Medium	Exposure Point	Exposure Route	Chemical of Potential Concern	EPC		Cancer Risk Calculations					Non-Cancer Hazard Calculations				
					Value	Units	Intake/Exposure Concentration		CSF/Unit Risk		Cancer Risk	Intake/Exposure Concentration		RfD/RfC		Hazard Quotient
							Value	Units	Value	Units		Value	Units	Value	Units	
Groundwater	Groundwater	Bedrock Aquifer - Water in Excavation	Dermal	1,2-Dibromoethane	3.3E+01	ug/L	1.1E-06	ug/L	8.5E+01	1/mg/kg/day	9.4E-05	7.8E-05	ug/L	NA	NA	NA
				Chloroform	2.5E+01	ug/L	3.9E-07	ug/L	NA	NA	NA	2.7E-05	ug/L	1.0E-02	mg/kg/day	2.7E-03
				Tetrachloroethene	1.1E+00	ug/L	1.1E-07	ug/L	5.4E-01	1/mg/kg/day	6.1E-08	7.9E-06	ug/L	1.0E-02	mg/kg/day	7.9E-04
				Trichloroethene	4.4E+03	ug/L	1.3E-04	ug/L	1.1E-02	1/mg/kg/day	1.5E-06	9.2E-03	ug/L	6.0E-03	mg/kg/day	1.5E+00
				Vinyl chloride	5.7E+00	ug/L	3.2E-07	ug/L	7.2E-01	1/mg/kg/day	2.3E-07	2.3E-05	ug/L	3.0E-03	mg/kg/day	7.5E-03
				cis-1,2-Dichloroethene	1.1E+03	ug/L	1.7E-05	ug/L	NA	NA	NA	1.2E-03	ug/L	1.0E-01	mg/kg/day	1.2E-02
				trans-1,2-Dichloroethene	3.2E+01	ug/L	4.9E-07	ug/L	NA	NA	NA	3.4E-05	ug/L	2.0E-01	mg/kg/day	1.7E-04
				Aluminum	3.6E+04	ug/L	1.2E-04	ug/L	NA	NA	NA	8.4E-03	ug/L	1.0E+00	mg/kg/day	8.4E-03
				Arsenic	7.1E+00	ug/L	2.4E-08	ug/L	1.5E+00	1/mg/kg/day	3.6E-08	1.7E-06	ug/L	3.0E-04	mg/kg/day	5.6E-03
				Chromium	9.1E+02	ug/L	6.1E-06	ug/L	NA	NA	NA	4.3E-04	ug/L	5.0E-04	mg/kg/day	8.5E-01
				Copper	2.0E+02	ug/L	6.8E-07	ug/L	NA	NA	NA	4.8E-05	ug/L	4.0E-02	mg/kg/day	1.2E-03
				Iron	7.2E+04	ug/L	2.4E-04	ug/L	NA	NA	NA	1.7E-02	ug/L	3.0E-01	mg/kg/day	5.7E-02
				Manganese	2.3E+03	ug/L	7.5E-06	ug/L	NA	NA	NA	5.3E-04	ug/L	8.0E-04	mg/kg/day	6.6E-01
				Nickel	6.3E+02	ug/L	4.2E-07	ug/L	NA	NA	NA	2.9E-05	ug/L	8.0E-04	mg/kg/day	3.7E-02
				Vanadium	5.6E+01	ug/L	1.9E-07	ug/L	NA	NA	NA	1.3E-05	ug/L	2.6E-05	mg/kg/day	5.1E-01
			Exp. Route Total								9.6E-05					3.7E+00
		Exposure Point Total									9.6E-05					3.7E+00
	Exposure Medium Total										9.6E-05					3.7E+00
Groundwater	Air	Bedrock Aquifer - Water Vapors at Excavation Pit	Inhalation	1,2-Dibromoethane	3.1E-04	mg/m³	4.3E-07	NA	7.6E-01	1/mg/kg/day	3.3E-07	3.0E-05	mg/kg/day	5.7E-04	mg/kg/day	5.3E-02
				Chloroform	2.3E-04	mg/m³	3.2E-07	NA	8.1E-02	1/mg/kg/day	2.6E-08	2.2E-05	mg/kg/day	1.4E-02	mg/kg/day	1.6E-03
				Tetrachloroethene	9.3E-06	mg/m³	1.3E-08	NA	2.0E-02	1/mg/kg/day	2.6E-10	9.1E-07	mg/kg/day	1.4E-01	mg/kg/day	6.5E-06
				Trichloroethene	4.0E-02	mg/m³	5.5E-05	NA	6.0E-03	1/mg/kg/day	3.3E-07	3.9E-03	mg/kg/day	NA	NA	NA
				Vinyl chloride	6.2E-05	mg/m³	8.6E-08	NA	1.5E-02	1/mg/kg/day	1.3E-09	6.0E-06	mg/kg/day	2.8E-02	mg/kg/day	2.2E-04
				cis-1,2-Dichloroethene	1.1E-02	mg/m³	1.5E-05	NA	NA	NA	NA	1.0E-03	mg/kg/day	NA	NA	NA
				trans-1,2-Dichloroethene	3.1E-04	mg/m³	4.3E-07	NA	NA	NA	NA	3.0E-05	mg/kg/day	NA	NA	NA
			Exp. Route Total								6.9E-07					5.5E-02
		Exposure Point Total									6.9E-07					5.5E-02
	Exposure Medium Total										6.9E-07					5.5E-02
Groundwater - Bedrock Aquifer Total											9.7E-05					3.7E+00
							Total of Receptor Risks Across All Media				9.7E-05	Total of Receptor Hazards Across All Media				3.7E+00

Notes-
DAevent for exposure to groundwater calculated on Table G-7.4.RME Supplement A.
EPC for inhalation of volatiles from groundwater from shower calculated on Table G-7.4.RME Supplement B.
Subchronic RfD values. Chronic used if Subchronic is NA.

Table 7.4.RME Supplement A
Calculation of DAevent
Construction Worker, Bedrock Aquifer Groundwater
Site 49 RFI Report
NSWC - White Oak
Silver Spring, Maryland

Chemical of Potential Concern	Groundwater Water Concentration (CW) (µg/L)	Permeability Coefficient (Kp) (cm/hr)	B (dimensionless)	Lag Time (τ_{event}) (hr)	t* (hr)	Fraction Absorbed Water (FA) (dimensionless)	Duration of Event (tevent) (hr)	DAevent (mg/cm^2-event)	Eq
1,2-Dibromoethane	3.3E+01	3.3E-03	1.1E-02	1.2E+00	2.8E+00	1.0E+00	8	2.6E-06	3
Chloroform	2.5E+01	6.8E-03	2.9E-02	5.0E-01	1.2E+00	1.0E+00	8	9.3E-07	3
Tetrachloroethylene	1.1E+00	3.3E-02	1.6E-01	9.1E-01	2.2E+00	1.0E+00	8	2.7E-07	3
Trichloroethylene	4.4E+03	1.2E-02	5.3E-02	5.8E-01	1.4E+00	1.0E+00	8	3.1E-04	3
Vinyl chloride	5.7E+00	5.6E-03	1.7E-02	2.4E-01	5.7E-01	1.0E+00	8	7.7E-07	3
cis-1,2-Dichloroethene	1.1E+03	7.7E-03	2.9E-02	3.7E-01	8.9E-01	1.0E+00	8	4.0E-05	3
trans-1,2-Dichloroethene	3.2E+01	7.7E-03	2.9E-02	3.7E-01	8.9E-01	1.0E+00	8	1.2E-06	3
Aluminum	3.6E+04	1.0E-03	NA	NA	NA	NA	8	2.8E-04	1
Arsenic	7.1E+00	1.0E-03	NA	NA	NA	NA	8	5.7E-08	1
Chromium	9.1E+02	2.0E-03	NA	NA	NA	NA	8	1.5E-05	1
Copper	2.0E+02	1.0E-03	NA	NA	NA	NA	8	1.6E-06	1
Iron	7.2E+04	1.0E-03	NA	NA	NA	NA	8	5.8E-04	1
Manganese	2.3E+03	1.0E-03	NA	NA	NA	NA	8	1.8E-05	1
Nickel	6.3E+02	2.0E-04	NA	NA	NA	NA	8	1.0E-06	1
Vanadium	5.6E+01	1.0E-03	NA	NA	NA	NA	8	4.5E-07	1

Inorganics: DAevent (mg/cm2-event) =
Kp x CW x tevent x 0.001 mg/ug x 0.001 l/cm^3 (eq 1)

Organics: DAevent (mg/cm2-event) =
tevent<t*: DAevent (mg/cm2-event) =
2 x FA x Kp x CW x (sqrt((6 x τ_{event} x tevent)/π)) x 0.001 mg/ug x 0.001 l/cm^3 (eq 2)

tevent>t*: DAevent (mg/cm2-event) =
FA x Kp x CW x (tevent/(1+B) + 2 x τ_{event} x ((1 + 3xB + 3xB^2)/(1+B)^2) x 0.001 mg/ug x 0.001 l/cm3 (eq 3)

Notes:
Permeability constants from EPA 2001, Risk Assessment Guidance for Superfund Volume I: Human Health Evaluation Manual (Part E, Supplemental Guidance for Dermal Risk Assessment). EPA/540/R/99/005.
NA - not applicable.

Table 7.4.RME Supplement B
Inhalation of Volatiles from Groundwater During Construction
Inhalation Exposure Concentrations Calculated Using a Two-Film Volatilization Model
Future Construction Worker Senario
Site 49 RFI Report
NSWC - White Oak
Silver Spring, Maryland

Chemical	Cw (µg/L)	MW (mol/gram)	K_H (unitless)	k_l (cm/hr)	k_g (cm/hr)	K_v (cm/hr)	ER (mg/hr)	ERa (g/sec-m^2)	Ca (mg/m^3)
1,2-Dichloropropane	3.32E+01	1.13E+02	1.15E-01	3.21E+00	1.95E+03	3.16E+00	1.05E+02	1.08E-08	3.07E-04
Chloroform	2.47E+01	1.19E+02	1.50E-01	3.17E+00	1.92E+03	3.13E+00	7.73E+01	7.95E-09	2.26E-04
Tetrachloroethene	1.10E+00	1.66E+02	7.54E-01	2.92E+00	1.77E+03	2.91E+00	3.20E+00	3.29E-10	9.35E-06
Trichloroethene	4.40E+03	1.31E+02	4.22E-01	3.09E+00	1.88E+03	3.08E+00	1.36E+04	1.39E-06	3.96E-02
Vinyl Chloride	5.70E+00	6.30E+01	1.11E+00	3.71E+00	2.25E+03	3.71E+00	2.11E+01	2.18E-09	6.17E-05
cis-1,2-Dichloroethene	1.10E+03	9.70E+01	1.67E-01	3.33E+00	2.02E+03	3.30E+00	3.63E+03	3.74E-07	1.06E-02
trans-1,2-Dichloroethene	3.17E+01	9.70E+01	3.85E-01	3.33E+00	2.02E+03	3.32E+00	1.05E+02	1.08E-08	3.07E-04

Equations

Equation 1 $Kv = 1/(1/k_l + 1/K_H{}^*K_g)$

Equation 2 $k_g = 700(18/MW)^{1/4}V$

Equation 3 $k_l = (32/MW)^{1/4}Ka'$

Equation 4 $ER = Kv * Cw * L/1000\ cm^3 * mg/1000\ \mu g$

Equation 5 $ERa = ER * g/1000\ mg * hr/60\ min * min/60\ sec * 1/A$

Variables	Units	Exposure Assumptions
Cw = groundwater concentration	(µg/L)	chem-specific
MW = molecular weight	(mol/gram)	chem-specific
K_H - Henry's Law Constant	(unitless)	chem-specific
Kv = volatilization rate	(cm/hr)	Solved by Eq 1
k_g = gas phase transfer coefficient	(cm/hr)	Solved by Eq 2
k_l = liquid phase transfer coefficient	(cm/hr)	Solved by Eq 3
V = wind speed	(m/s)	4.4
Ka' = aeration rate	(cm/hr)	0.0633
ER = emission rate	(mg/hr)	Solved by Eq 4
A = area of excavation (utility ditch)	(m^2)	2,700
Era = area emission rate	(g/sec-m^2)	Solved by Eq 5
Ca = air concentration	(mg/m^3)	Solved using SCREEN3 model

Note: aeration rate based on aeration rate for small pond (0.1/day) multiplied by depth of water

TABLE 7.1.RME

CALCULATION OF CHEMICAL CANCER RISKS AND NON-CANCER HAZARDS

CENTRAL TENDENCY

Site 49 RFI Report

NSWC - White Oak

Silver Spring, Maryland

Scenario Timeframe: Future
Receptor Population: Resident
Receptor Age: Adult

Medium	Exposure Medium	Exposure Point	Exposure Route	Chemical of Potential Concern	EPC		Cancer Risk Calculations					Non-Cancer Hazard Calculations				
					Value	Units	Intake/Exposure Concentration		CSF/Unit Risk		Cancer Risk	Intake/Exposure Concentration		RfD/RfC		Hazard Quotient
							Value	Units	Value	Units		Value	Units	Value	Units	
Groundwater	Groundwater	Bedrock Aquifer - Tap Water	Ingestion	1,2-Dibromoethane	1.4E+00	ug/L	NA	NA	NA	NA	NA	1.8E-05	ug/L	NA	NA	NA
				Chloroform	1.8E+00	ug/L	NA	NA	NA	NA	NA	2.3E-05	ug/L	1.0E-02	mg/kg/day	2.3E-03
				Tetrachloroethene	1.2E+00	ug/L	NA	NA	NA	NA	NA	1.5E-05	ug/L	1.0E-02	mg/kg/day	1.5E-03
				Trichloroethene	2.3E+02	ug/L	NA	NA	NA	NA	NA	2.9E-03	ug/L	6.0E-03	mg/kg/day	4.8E-01
				Vinyl chloride	1.9E+00	ug/L	NA	NA	NA	NA	NA	2.5E-05	ug/L	3.0E-03	mg/kg/day	8.2E-03
				cis-1,2-Dichloroethene	4.8E+01	ug/L	NA	NA	NA	NA	NA	6.1E-04	ug/L	1.0E-02	mg/kg/day	6.1E-02
				trans-1,2-Dichloroethene	3.6E+00	ug/L	NA	NA	NA	NA	NA	4.7E-05	ug/L	2.0E-02	mg/kg/day	2.3E-03
				Aluminum	4.7E+01	ug/L	NA	NA	NA	NA	NA	6.1E-04	ug/L	1.0E+00	mg/kg/day	6.1E-04
				Chromium	1.4E+00	ug/L	NA	NA	NA	NA	NA	1.8E-05	ug/L	3.0E-03	mg/kg/day	6.1E-03
				Iron	3.6E+02	ug/L	NA	NA	NA	NA	NA	4.6E-03	ug/L	3.0E-01	mg/kg/day	1.5E-02
				Manganese	1.5E+02	ug/L	NA	NA	NA	NA	NA	1.9E-03	ug/L	2.0E-02	mg/kg/day	9.6E-02
				Nickel	9.6E+00	ug/L	NA	NA	NA	NA	NA	1.2E-04	ug/L	2.0E-02	mg/kg/day	6.1E-03
				Vanadium	7.6E-01	ug/L	NA	NA	NA	NA	NA	9.8E-06	ug/L	1.0E-03	mg/kg/day	9.8E-03
			Exp. Route Total								0.0E+00					6.9E-01
Groundwater	Groundwater	Bedrock Aquifer - Tap Water	Dermal	1,2-Dibromoethane	1.4E+00	ug/L	NA	NA	NA	NA	NA	3.5E-07	ug/L	NA	NA	NA
				Chloroform	1.8E+00	ug/L	NA	NA	NA	NA	NA	2.0E-06	ug/L	1.0E-02	mg/kg/day	2.0E-04
				Tetrachloroethene	1.2E+00	ug/L	NA	NA	NA	NA	NA	8.5E-06	ug/L	1.0E-02	mg/kg/day	8.5E-04
				Trichloroethene	2.3E+02	ug/L	NA	NA	NA	NA	NA	4.7E-04	ug/L	6.0E-03	mg/kg/day	7.8E-02
				Vinyl chloride	1.9E+00	ug/L	NA	NA	NA	NA	NA	1.3E-06	ug/L	3.0E-03	mg/kg/day	4.4E-04
				cis-1,2-Dichloroethene	4.8E+01	ug/L	NA	NA	NA	NA	NA	5.1E-05	ug/L	1.0E-02	mg/kg/day	5.1E-03
				trans-1,2-Dichloroethene	3.6E+00	ug/L	NA	NA	NA	NA	NA	3.9E-06	ug/L	2.0E-02	mg/kg/day	1.9E-04
				Aluminum	4.7E+01	ug/L	NA	NA	NA	NA	NA	2.0E-06	ug/L	1.0E+00	mg/kg/day	2.0E-06
				Chromium	1.4E+00	ug/L	NA	NA	NA	NA	NA	1.2E-07	ug/L	7.5E-05	mg/kg/day	1.6E-03
				Iron	3.6E+02	ug/L	NA	NA	NA	NA	NA	1.5E-05	ug/L	3.0E-01	mg/kg/day	5.0E-05
				Manganese	1.5E+02	ug/L	NA	NA	NA	NA	NA	6.2E-06	ug/L	8.0E-04	mg/kg/day	7.7E-03
				Nickel	9.6E+00	ug/L	NA	NA	NA	NA	NA	7.9E-08	ug/L	8.0E-04	mg/kg/day	9.9E-05
				Vanadium	7.6E-01	ug/L	NA	NA	NA	NA	NA	3.2E-08	ug/L	2.6E-05	mg/kg/day	1.2E-03
			Exp. Route Total								0.0E+00					9.6E-02
		Exposure Point Total									0.0E+00					7.9E-01
	Exposure Medium Total										0.0E+00					7.9E-01

TABLE 7.1.RME

CALCULATION OF CHEMICAL CANCER RISKS AND NON-CANCER HAZARDS

CENTRAL TENDENCY

Site 49 RFI Report

NSWC - White Oak

Silver Spring, Maryland

Scenario Timeframe: Future
Receptor Population: Resident
Receptor Age: Adult

Medium	Exposure Medium	Exposure Point	Exposure Route	Chemical of Potential Concern	EPC		Cancer Risk Calculations					Non-Cancer Hazard Calculations				
					Value	Units	Intake/Exposure Concentration		CSF/Unit Risk		Cancer Risk	Intake/Exposure Concentration		RfD/RfC		Hazard Quotient
							Value	Units	Value	Units		Value	Units	Value	Units	
Groundwater	Air	Bedrock Aquifer - Water Vapors at Showerhead	Inhalation	1,2-Dibromoethane	4.1E-08	mg/m^3	NA	NA	NA	NA	NA	2.6E-08	mg/kg/day	5.7E-05	mg/kg/day	4.6E-04
				Chloroform	9.6E-08	mg/m^3	NA	NA	NA	NA	NA	6.2E-08	mg/kg/day	1.4E-02	mg/kg/day	4.4E-06
				Tetrachloroethene	5.9E-08	mg/m^3	NA	NA	NA	NA	NA	3.8E-08	mg/kg/day	1.4E-01	mg/kg/day	2.7E-07
				Trichloroethene	1.2E-05	mg/m^3	NA	NA	NA	NA	NA	7.9E-06	mg/kg/day	NA	NA	NA
				Vinyl chloride	1.4E-07	mg/m^3	NA	NA	NA	NA	NA	8.8E-08	mg/kg/day	2.8E-02	mg/kg/day	3.1E-06
				cis-1,2-Dichloroethene	2.9E-06	mg/m^3	NA	NA	NA	NA	NA	1.9E-06	mg/kg/day	NA	NA	NA
				trans-1,2-Dichloroethene	2.2E-07	mg/m^3	NA	NA	NA	NA	NA	1.4E-07	mg/kg/day	NA	NA	NA
			Exp. Route Total								0.0E+00					4.7E-04
		Exposure Point Total									0.0E+00					4.7E-04
	Exposure Medium Total										0.0E+00					4.7E-04
Groundwater - Bedrock Aquifer Total											0.0E+00					7.9E-01
							Total of Receptor Risks Across All Media				0.0E+00	Total of Receptor Hazards Across All Media				7.9E-01

Notes-
DAevent for exposure to groundwater calculated on Table G-7.1.CT Supplement A.
EPC for inhalation of volatiles from groundwater from shower calculated on Table G-7.1.CT Supplement B.

Table 7.1.CT Supplement A
Calculation of DAevent
Adult Resident, Bedrock Aquifer Groundwater
Site 49 RFI Report
NSWC - White Oak
Silver Spring, Maryland

Chemical of Potential Concern	Groundwater Water Concentration (CW) (µg/L)	Permeability Coefficient (Kp) (cm/hr)	B (dimensionless)	Lag Time (τ_{event}) (hr)	t* (hr)	Fraction Absorbed Water (FA) (dimensionless)	Duration of Event (tevent) (hr)	DAevent (mg/cm²-event)	Eq
1,2-Dibromoethane	1.4E+00	2.0E-03	1.1E-02	1.2E+00	2.8E+00	1.0E+00	0.25	2.1E-09	2
Chloroform	1.8E+00	6.8E-03	2.9E-02	5.0E-01	1.2E+00	1.0E+00	0.25	1.2E-08	2
Tetrachloroethylene	1.2E+00	3.3E-02	1.6E-01	9.1E-01	2.2E+00	1.0E+00	0.25	5.2E-08	2
Trichloroethylene	2.3E+02	1.2E-02	5.3E-02	5.8E-01	1.4E+00	1.0E+00	0.25	2.9E-06	2
Vinyl chloride	1.9E+00	5.6E-03	1.7E-02	2.4E-01	5.7E-01	1.0E+00	0.25	8.1E-09	2
cis-1,2-Dichloroethene	4.8E+01	7.7E-03	2.9E-02	3.7E-01	8.9E-01	1.0E+00	0.25	3.1E-07	2
trans-1,2-Dichloroethene	3.6E+00	7.7E-03	2.9E-02	3.7E-01	8.9E-01	1.0E+00	0.25	2.4E-08	2
Aluminum	4.7E+01	1.0E-03	NA	NA	NA	NA	0.25	1.2E-08	1
Chromium	1.4E+00	2.0E-03	NA	NA	NA	NA	0.25	7.2E-10	1
Iron	3.6E+02	1.0E-03	NA	NA	NA	NA	0.25	9.0E-08	1
Manganese	1.5E+02	1.0E-03	NA	NA	NA	NA	0.25	3.7E-08	1
Nickel	9.6E+00	2.0E-04	NA	NA	NA	NA	0.25	4.8E-10	1
Vanadium	7.6E-01	1.0E-03	NA	NA	NA	NA	0.25	1.9E-10	1

Inorganics: DAevent (mg/cm2-event) =
Kp x CW x tevent x 0.001 mg/ug x 0.001 l/cm^3 (eq 1)

Organics: DAevent (mg/cm2-event) =
tevent<t*: DAevent (mg/cm2-event) =
2 x FA x Kp x CW x (sqrt((6 x τ_{event} x tevent)/π)) x 0.001 mg/ug x 0.001 l/cm^3 (eq 2)

tevent>t*: DAevent (mg/cm2-event) =
FA x Kp x CW x (tevent/(1+B) + 2 x τ_{event} x ((1 + 3xB + 3xB^2)/(1+B)^2) x 0.001 mg/ug x 0.001 l/cm3 (eq 3)

Notes:
Permeability constants from EPA 2001, Risk Assessment Guidance for Superfund Volume I: Human Health Evaluation Manual (Part E, Supplemental Guidance for Dermal Risk Assessment). EPA/540/R/99/005.
NA - not applicable.

Table 7.2.CT Supplement A
Calculation of DAevent
Child Resident, Bedrock Aquifer Groundwater
Site 49 RFI Report
NSWC - White Oak
Silver Spring, Maryland

Chemical of Potential Concern	Groundwater Water Concentration (CW) (µg/L)	Permeability Coefficient (Kp) (cm/hr)	B (dimensionless)	Lag Time (τ_{event}) (hr)	t* (hr)	Fraction Absorbed Water (FA) (dimensionless)	Duration of Event (tevent) (hr)	DAevent (mg/cm^2-event)	Eq
1,2-Dibromoethane	1.4E+00	2.0E-03	1.1E-02	1.2E+00	2.8E+00	1.0E+00	0.33	2.8E-09	2
Chloroform	1.8E+00	6.8E-03	2.9E-02	5.0E-01	1.2E+00	1.0E+00	0.33	1.4E-08	2
Tetrachloroethylene	1.2E+00	3.3E-02	1.6E-01	9.1E-01	2.2E+00	1.0E+00	0.33	5.9E-08	2
Trichloroethylene	2.3E+02	1.2E-02	5.3E-02	5.8E-01	1.4E+00	1.0E+00	0.33	3.3E-06	2
Vinyl chloride	1.9E+00	5.6E-03	1.7E-02	2.4E-01	5.7E-01	1.0E+00	0.33	1.1E-08	2
cis-1,2-Dichloroethene	4.8E+01	7.7E-03	2.9E-02	3.7E-01	8.9E-01	1.0E+00	0.33	3.6E-07	2
trans-1,2-Dichloroethene	3.6E+00	7.7E-03	2.9E-02	3.7E-01	8.9E-01	1.0E+00	0.33	2.7E-08	2
Aluminum	4.7E+01	1.0E-03	NA	NA	NA	NA	0.33	1.6E-08	1
Chromium	1.4E+00	2.0E-03	NA	NA	NA	NA	0.33	9.5E-10	1
Iron	3.6E+02	1.0E-03	NA	NA	NA	NA	0.33	1.2E-07	1
Manganese	1.5E+02	1.0E-03	NA	NA	NA	NA	0.33	4.9E-08	1
Nickel	9.6E+00	2.0E-04	NA	NA	NA	NA	0.33	6.3E-10	1
Vanadium	7.6E-01	1.0E-03	NA	NA	NA	NA	0.33	2.5E-10	1

Inorganics: DAevent (mg/cm2-event) =
Kp x CW x tevent x 0.001 mg/ug x 0.001 l/cm^3 (eq 1)

Organics: DAevent (mg/cm2-event) =
tevent<t*: DAevent (mg/cm2-event) =
2 x FA x Kp x CW x (sqrt((6 x τ_{event} x tevent)/π)) x 0.001 mg/ug x 0.001 l/cm^3 (eq 2)

tevent>t*: DAevent (mg/cm2-event) =
FA x Kp x CW x (tevent/(1+B) + 2 x τ_{event} x ((1 + 3xB + 3xB^2)/(1+B)^2) x 0.001 mg/ug x 0.001 l/cm3 (eq 3)

Notes:
Permeability constants from EPA 2001, Risk Assessment Guidance for Superfund Volume I: Human Health Evaluation Manual (Part E, Supplemental Guidance for Dermal Risk Assessment). EPA/540/R/99/005.
NA - *not applicable.*

TABLE 7.2.RME
CALCULATION OF CHEMICAL CANCER RISKS AND NON-CANCER HAZARDS
CENTRAL TENDENCY
Site 49 RFI Report
NSWC - White Oak
Silver Spring, Maryland

Scenario Timeframe: Future
Receptor Population: Resident
Receptor Age: Child

Medium	Exposure Medium	Exposure Point	Exposure Route	Chemical of Potential Concern	EPC		Cancer Risk Calculations					Non-Cancer Hazard Calculations				
					Value	Units	Intake/Exposure Concentration		CSF/Unit Risk		Cancer Risk	Intake/Exposure Concentration		RfD/RfC		Hazard Quotient
							Value	Units	Value	Units		Value	Units	Value	Units	
Groundwater	Groundwater	Bedrock Aquifer - Tap Water	Ingestion	1,2-Dibromoethane	1.4E+00	ug/L	NA	NA	NA	NA	NA	5.9E-05	ug/L	NA	NA	NA
				Chloroform	1.8E+00	ug/L	NA	NA	NA	NA	NA	7.6E-05	ug/L	1.0E-02	mg/kg/day	7.6E-03
				Tetrachloroethene	1.2E+00	ug/L	NA	NA	NA	NA	NA	5.1E-05	ug/L	1.0E-02	mg/kg/day	5.1E-03
				Trichloroethene	2.3E+02	ug/L	NA	NA	NA	NA	NA	9.7E-03	ug/L	6.0E-03	mg/kg/day	1.6E+00
				Vinyl chloride	1.9E+00	ug/L	NA	NA	NA	NA	NA	8.2E-05	ug/L	3.0E-03	mg/kg/day	2.7E-02
				cis-1,2-Dichloroethene	4.8E+01	ug/L	NA	NA	NA	NA	NA	2.0E-03	ug/L	1.0E-02	mg/kg/day	2.0E-01
				trans-1,2-Dichloroethene	3.6E+00	ug/L	NA	NA	NA	NA	NA	1.6E-04	ug/L	2.0E-02	mg/kg/day	7.8E-03
				Aluminum	4.7E+01	ug/L	NA	NA	NA	NA	NA	2.0E-03	ug/L	1.0E+00	mg/kg/day	2.0E-03
				Chromium	1.4E+00	ug/L	NA	NA	NA	NA	NA	6.1E-05	ug/L	3.0E-03	mg/kg/day	2.0E-02
				Iron	3.6E+02	ug/L	NA	NA	NA	NA	NA	1.5E-02	ug/L	3.0E-01	mg/kg/day	5.1E-02
				Manganese	1.5E+02	ug/L	NA	NA	NA	NA	NA	6.4E-03	ug/L	2.0E-02	mg/kg/day	3.2E-01
				Nickel	9.6E+00	ug/L	NA	NA	NA	NA	NA	4.1E-04	ug/L	2.0E-02	mg/kg/day	2.0E-02
				Vanadium	7.6E-01	ug/L	NA	NA	NA	NA	NA	3.3E-05	ug/L	1.0E-03	mg/kg/day	3.3E-02
			Exp. Route Total								0.0E+00					2.3E+00
Groundwater	Groundwater	Bedrock Aquifer - Tap Water	Dermal	1,2-Dibromoethane	1.4E+00	ug/L	NA	NA	NA	NA	NA	8.0E-07	ug/L	NA	NA	NA
				Chloroform	1.8E+00	ug/L	NA	NA	NA	NA	NA	3.8E-06	ug/L	1.0E-02	mg/kg/day	3.8E-04
				Tetrachloroethene	1.2E+00	ug/L	NA	NA	NA	NA	NA	1.7E-05	ug/L	1.0E-02	mg/kg/day	1.7E-03
				Trichloroethene	2.3E+02	ug/L	NA	NA	NA	NA	NA	9.2E-04	ug/L	6.0E-03	mg/kg/day	1.5E-01
				Vinyl chloride	1.9E+00	ug/L	NA	NA	NA	NA	NA	3.0E-06	ug/L	3.0E-03	mg/kg/day	1.0E-03
				cis-1,2-Dichloroethene	4.8E+01	ug/L	NA	NA	NA	NA	NA	1.0E-04	ug/L	1.0E-02	mg/kg/day	1.0E-02
				trans-1,2-Dichloroethene	3.6E+00	ug/L	NA	NA	NA	NA	NA	7.6E-06	ug/L	2.0E-02	mg/kg/day	3.8E-04
				Aluminum	4.7E+01	ug/L	NA	NA	NA	NA	NA	4.4E-06	ug/L	1.0E+00	mg/kg/day	4.4E-06
				Chromium	1.4E+00	ug/L	NA	NA	NA	NA	NA	2.7E-07	ug/L	7.5E-05	mg/kg/day	3.6E-03
				Iron	3.6E+02	ug/L	NA	NA	NA	NA	NA	3.4E-05	ug/L	3.0E-01	mg/kg/day	1.1E-04
				Manganese	1.5E+02	ug/L	NA	NA	NA	NA	NA	1.4E-05	ug/L	8.0E-04	mg/kg/day	1.7E-02
				Nickel	9.6E+00	ug/L	NA	NA	NA	NA	NA	1.8E-07	ug/L	8.0E-04	mg/kg/day	2.2E-04
				Vanadium	7.6E-01	ug/L	NA	NA	NA	NA	NA	7.1E-08	ug/L	2.6E-05	mg/kg/day	2.7E-03
			Exp. Route Total								0.0E+00					1.9E-01
		Exposure Point Total									0.0E+00					2.5E+00
	Exposure Medium Total										0.0E+00					2.5E+00
Groundwater - Bedrock Aquifer Total											0.0E+00					2.5E+00
							Total of Receptor Risks Across All Media				0.0E+00	Total of Receptor Hazards Across All Media				2.5E+00

Notes-
DAevent for exposure to groundwater calculated on Table G-7.2.CT Supplement A.

TABLE 7.3.RME

CALCULATION OF CHEMICAL CANCER RISKS AND NON-CANCER HAZARDS

CENTRAL TENDENCY

Site 49 RFI Report

NSWC - White Oak

Silver Spring, Maryland

Scenario Timeframe: Future
Receptor Population: Resident
Receptor Age: Child/Adult

Medium	Exposure Medium	Exposure Point	Exposure Route	Chemical of Potential Concern	EPC		Cancer Risk Calculations					Non-Cancer Hazard Calculations				
					Value	Units	Intake/Exposure Concentration		CSF/Unit Risk		Cancer Risk	Intake/Exposure Concentration		RfD/RfC		Hazard Quotient
							Value	Units	Value	Units		Value	Units	Value	Units	
Groundwater	Groundwater	Bedrock Aquifer - Tap Water	Ingestion	1,2-Dibromoethane	1.4E+00	ug/L	7.4E-06	ug/L	8.5E+01	1/mg/kg/day	6.3E-04	NA	NA	NA	NA	NA
				Chloroform	1.8E+00	ug/L	9.5E-06	ug/L	NA	NA	NA	NA	NA	NA	NA	NA
				Tetrachloroethene	1.2E+00	ug/L	6.3E-06	ug/L	5.4E-01	1/mg/kg/day	3.4E-06	NA	NA	NA	NA	NA
				Trichloroethene	2.3E+02	ug/L	1.2E-03	ug/L	1.1E-02	1/mg/kg/day	1.3E-05	NA	NA	NA	NA	NA
				Vinyl chloride	1.9E+00	ug/L	1.4E-04	ug/L	7.2E-01	1/mg/kg/day	9.9E-05	NA	NA	NA	NA	NA
				cis-1,2-Dichloroethene	4.8E+01	ug/L	2.5E-04	ug/L	NA	NA	NA	NA	NA	NA	NA	NA
				trans-1,2-Dichloroethene	3.6E+00	ug/L	1.9E-05	ug/L	NA	NA	NA	NA	NA	NA	NA	NA
				Aluminum	4.7E+01	ug/L	2.5E-04	ug/L	NA	NA	NA	NA	NA	NA	NA	NA
				Chromium	1.4E+00	ug/L	7.6E-06	ug/L	NA	NA	NA	NA	NA	NA	NA	NA
				Iron	3.6E+02	ug/L	1.9E-03	ug/L	NA	NA	NA	NA	NA	NA	NA	NA
				Manganese	1.5E+02	ug/L	8.0E-04	ug/L	NA	NA	NA	NA	NA	NA	NA	NA
				Nickel	9.6E+00	ug/L	5.1E-05	ug/L	NA	NA	NA	NA	NA	NA	NA	NA
				Vanadium	7.6E-01	ug/L	4.1E-06	ug/L	NA	NA	NA	NA	NA	NA	NA	NA
			Exp. Route Total								7.4E-04					0.0E+00
Groundwater	Groundwater	Bedrock Aquifer - Tap Water	Dermal	1,2-Dibromoethane	1.4E+00	ug/L	5.0E-06	ug/L	8.5E+01	1/mg/kg/day	4.3E-04	NA	NA	NA	NA	NA
				Chloroform	1.8E+00	ug/L	2.8E-05	ug/L	NA	NA	NA	NA	NA	NA	NA	NA
				Tetrachloroethene	1.2E+00	ug/L	1.2E-04	ug/L	5.4E-01	1/mg/kg/day	6.5E-05	NA	NA	NA	NA	NA
				Trichloroethene	2.3E+02	ug/L	6.7E-03	ug/L	1.1E-02	1/mg/kg/day	7.3E-05	NA	NA	NA	NA	NA
				Vinyl chloride	1.9E+00	ug/L	5.3E-06	ug/L	7.2E-01	1/mg/kg/day	3.8E-06	NA	NA	NA	NA	NA
				cis-1,2-Dichloroethene	4.8E+01	ug/L	7.3E-04	ug/L	NA	NA	NA	NA	NA	NA	NA	NA
				trans-1,2-Dichloroethene	3.6E+00	ug/L	5.5E-05	ug/L	NA	NA	NA	NA	NA	NA	NA	NA
				Aluminum	4.7E+01	ug/L	2.8E-05	ug/L	NA	NA	NA	NA	NA	NA	NA	NA
				Chromium	1.4E+00	ug/L	1.7E-06	ug/L	NA	NA	NA	NA	NA	NA	NA	NA
				Iron	3.6E+02	ug/L	2.1E-04	ug/L	NA	NA	NA	NA	NA	NA	NA	NA
				Manganese	1.5E+02	ug/L	8.8E-05	ug/L	NA	NA	NA	NA	NA	NA	NA	NA
				Nickel	9.6E+00	ug/L	1.1E-06	ug/L	NA	NA	NA	NA	NA	NA	NA	NA
				Vanadium	7.6E-01	ug/L	4.5E-07	ug/L	NA	NA	NA	NA	NA	NA	NA	NA
			Exp. Route Total								5.7E-04					0.0E+00
		Exposure Point Total									1.3E-03					0.0E+00
	Exposure Medium Total										1.3E-03					0.0E+00

TABLE 7.3.RME

CALCULATION OF CHEMICAL CANCER RISKS AND NON-CANCER HAZARDS

CENTRAL TENDENCY

Site 49 RFI Report

NSWC - White Oak

Silver Spring, Maryland

Scenario Timeframe: Future
Receptor Population: Resident
Receptor Age: Child/Adult

Medium	Exposure Medium	Exposure Point	Exposure Route	Chemical of Potential Concern	EPC		Cancer Risk Calculations					Non-Cancer Hazard Calculations				
					Value	Units	Intake/Exposure Concentration		CSF/Unit Risk		Cancer Risk	Intake/Exposure Concentration		RfD/RfC		Hazard Quotient
							Value	Units	Value	Units		Value	Units	Value	Units	
Groundwater	Air	Bedrock Aquifer - Water Vapors at Showerhead	Inhalation	1,2-Dibromoethane	4.1E-08	mg/m^3	3.4E-09	mg/kg/day	7.6E-01	NA	NA	NA	NA	NA	NA	NA
				Chloroform	9.6E-08	mg/m^3	7.9E-09	mg/kg/day	8.1E-02	1/mg/kg/day	6.4E-10	NA	NA	NA	NA	NA
				Tetrachloroethene	5.9E-08	mg/m^3	4.9E-09	mg/kg/day	2.0E-02	1/mg/kg/day	9.8E-11	NA	NA	NA	NA	NA
				Trichloroethene	1.2E-05	mg/m^3	1.0E-06	mg/kg/day	6.0E-03	1/mg/kg/day	6.1E-09	NA	NA	NA	NA	NA
				Vinyl chloride	1.4E-07	mg/m^3	1.1E-08	mg/kg/day	1.5E-02	1/mg/kg/day	1.7E-10	NA	NA	NA	NA	NA
				cis-1,2-Dichloroethene	2.9E-06	mg/m^3	2.4E-07	mg/kg/day	NA	NA	NA	NA	NA	NA	NA	NA
				trans-1,2-Dichloroethene	2.2E-07	mg/m^3	1.8E-08	mg/kg/day	NA	NA	NA	NA	NA	NA	NA	NA
			Exp. Route Total								7.0E-09					0.0E+00
		Exposure Point Total									7.0E-09					0.0E+00
	Exposure Medium Total										7.0E-09					0.0E+00
Groundwater - Bedrock Aquifer Total											1.3E-03					0.0E+00
							Total of Receptor Risks Across All Media				1.3E-03	Total of Receptor Hazards Across All Media				0.0E+00

Notes-
DAevent for exposure to groundwater calculated on Tables G-7.1.CT Supplement A and G-7.2.CT Supplement A.

Table 7.1.CT Supplement B
Inhalation Exposure Concentrations from Foster and Chrostowski Shower Model
Site 49 RFI Report
NSWC - White Oak
Silver Spring, Maryland

Chemical	Exposure Point Concentration Cwo (mg/l)	Molecular weight (HH) (g/mole)	Henry's Law Constant (H) (atm-m^3/mole)	Kg (VOC) (cm/hr)	Kl(VOC) (cm/hr)	KL (cm/hr)	Kal (cm/hr)	Cwd (mg/l)	S (mg/m^3-min)	Calculated Inhalation Exposure (Einh) (mg/kg/shower)
1,2-Dibromoethane	1.4E-03	1.9E+02	3.20E-04	9.2E+02	9.6E+00	5.4E+00	7.3E+00	3.0E-04	2.0E-03	**4.1E-08**
Chloroform	1.8E-03	1.2E+02	2.87E-03	1.2E+03	1.2E+01	1.1E+01	1.5E+01	7.1E-04	4.7E-03	**9.6E-08**
Tetrachloroethene	1.2E-03	1.7E+02	2.59E-02	9.9E+02	1.0E+01	1.0E+01	1.4E+01	4.4E-04	2.9E-03	**5.9E-08**
Trichloroethene	2.3E-01	1.3E+02	1.03E-02	1.1E+03	1.2E+01	1.1E+01	1.5E+01	9.0E-02	6.0E-01	**1.2E-05**
Vinyl Chloride	1.9E-03	6.3E+01	8.19E-02	1.6E+03	1.7E+01	1.7E+01	2.3E+01	1.0E-03	6.7E-03	**1.4E-07**
cis-1,2-Dichloroethene	4.8E-02	9.7E+01	7.58E-03	1.3E+03	1.3E+01	1.3E+01	1.8E+01	2.1E-02	1.4E-01	**2.9E-06**
trans-1,2-Dichloroethene	3.6E-03	9.7E+01	6.56E-03	1.3E+03	1.3E+01	1.3E+01	1.8E+01	1.6E-03	1.1E-02	**2.2E-07**

Variables	Units	Exposure Assumptions
Kg(VOC) = gas-film mass transfer coefficient	cm/hr	Solved by Eq 1
Kl(VOC) = liquid-film mass transfer coefficient	cm/hr	Solved by Eq 2
KL = overall mass transfer coefficient	cm/hr	Solved by Eq 3
Kal = adjusted overall mass transfer coeff.	cm/hr	Solved by Eq 4
Tl = Calibration temp. of water	K (20C +273)	293
Ts = Shower water temperature	k (45C)	318
Us = water viscosity at Ts	centipoise	0.596
Ul = water viscosity at Tl	cp	1.002
Cwd = conc. leaving droplets after time sdt	ug/l	Solved by Eq 5
sdt = shower droplet drop time	sec	2
d = shower droplet diameter	mm	1
FR = shower water flow rate	l/min	20
SV = shower room air volume	m^3	3
S = indoor VOC generation rate	ug/m^3-min	Solved by Eq 6
VR = ventilation rate	l/min	13.8
Variables	**Units**	**Exposure Assumptions**
BW = body weight	kg	70
Ds = duration of shower	min	12
Dt = total duration in shower room	min	15
R = air exchange rate	min^{-1}	0.0083
Ca = indoor air concentration of VOCs	ug/m^3	Solved by Eq 7
Einh = inhalation exposure per shower	*mg/kg/shower*	Solved by Eq 8

Equation 1:	Kg(VOC) =	$3000 * (18 / HH)^{0.5}$
Equation 2:	Kl(VOC) =	$20 * (44 / HH)^{0.5}$
Equation 3:	KL =	$((1 / Kl(VOC)) + (0.024 / (Kg (VOC) * H)))^{-1}$
Equation 4:	Kal =	$(KL * (((Tl * Us) / (Ts * Ul))^{-0.5}))$
Equation 5:	Cwd =	(Cwo * (1-EXP((-1 * Kal * sdt)/(60 * d))))
Equation 6:	S =	(Cwd * FR / SV)
Equation 7:	see time series example on Table I-GW-5	
Equation 8:	**Einh =**	**If t>Ds** (((VR * S) / (BW * R * 1000000)) * ((Ds + (EXP(-R * Dt) / R)-(EXP(R * (Ds - Dt))) / R)))

Henry's Law Constant from USEPA's *Superfund Public Health Evaluation Manual.* USEPA/540/1-86/060, October 1986.

TABLE 7.4.CT
CALCULATION OF CHEMICAL CANCER RISKS AND NON-CANCER HAZARDS
CENTRAL TENDENCY
Site 49 RFI Report
NSWC - White Oak
Silver Spring, Maryland

Scenario Timeframe: Future
Receptor Population: Construction Worker
Receptor Age: Adult

Medium	Exposure Medium	Exposure Point	Exposure Route	Chemical of Potential Concern	EPC		Cancer Risk Calculations					Non-Cancer Hazard Calculations				
					Value	Units	Intake/Exposure Concentration		CSF/Unit Risk		Cancer Risk	Intake/Exposure Concentration		RfD/RfC		Hazard Quotient
							Value	Units	Value	Units		Value	Units	Value	Units	
Groundwater	Groundwater	Bedrock Aquifer - Water in Excavation	Dermal	1,2-Dibromoethane	1.39	ug/L	2.3E-08	ug/L	8.5E+01	NA	2.0E-06	1.6E-06	ug/L	NA	NA	NA
				Chloroform	1.79	ug/L	2.0E-08	ug/L	NA	NA	NA	1.4E-06	ug/L	1.0E-02	mg/kg/day	1.4E-04
				Tetrachloroethene	1.19	ug/L	8.6E-08	ug/L	5.4E-01	1/mg/kg/day	4.7E-08	6.1E-06	ug/L	1.0E-02	mg/kg/day	6.1E-04
				Trichloroethene	226	ug/L	4.8E-06	ug/L	1.1E-02	1/mg/kg/day	5.3E-08	3.3E-04	ug/L	6.0E-03	mg/kg/day	5.6E-02
				Vinyl chloride	1.92	ug/L	5.4E-08	ug/L	7.2E-01	1/mg/kg/day	3.9E-08	3.8E-06	ug/L	3.0E-03	mg/kg/day	1.3E-03
				cis-1,2-Dichloroethene	47.9	ug/L	5.2E-07	ug/L	NA	NA	NA	3.6E-05	ug/L	1.0E-01	mg/kg/day	3.6E-04
				trans-1,2-Dichloroethene	3.63	ug/L	3.9E-08	ug/L	NA	NA	NA	2.8E-06	ug/L	2.0E-01	mg/kg/day	1.4E-05
				Aluminum	652	ug/L	1.1E-06	ug/L	NA	NA	NA	7.7E-05	ug/L	1.0E+00	mg/kg/day	7.7E-05
				Arsenic	2.03	ug/L	3.4E-09	ug/L	1.5E+00	1/mg/kg/day	5.1E-09	2.4E-07	ug/L	3.0E-04	mg/kg/day	8.0E-04
				Chromium	14.9	ug/L	5.0E-08	ug/L	NA	NA	NA	3.5E-06	ug/L	5.0E-04	mg/kg/day	7.0E-03
				Copper	6.2	ug/L	1.0E-08	ug/L	NA	NA	NA	7.2E-07	ug/L	4.0E-02	mg/kg/day	1.8E-05
				Iron	1978	ug/L	3.3E-06	ug/L	NA	NA	NA	2.3E-04	ug/L	3.0E-01	mg/kg/day	7.7E-04
				Manganese	192	ug/L	3.2E-07	ug/L	NA	NA	NA	2.3E-05	ug/L	8.0E-04	mg/kg/day	2.8E-02
				Nickel	23.3	ug/L	7.8E-09	ug/L	NA	NA	NA	5.5E-07	ug/L	8.0E-04	mg/kg/day	6.9E-04
				Vanadium	2.44	ug/L	4.1E-09	ug/L	NA	NA	NA	2.9E-07	ug/L	2.6E-05	mg/kg/day	1.1E-02
			Exp. Route Total								2.1E-06					1.1E-01
		Exposure Point Total									2.1E-06					1.1E-01
	Exposure Medium Total										2.1E-06					1.1E-01
Groundwater	Air	Bedrock Aquifer - Water Vapors at Excavation Pit	Inhalation	1,2-Dibromoethane	1.3E-05	mg/m³	9.0E-09	NA	7.6E-01	1/mg/kg/day	6.8E-09	6.3E-07	mg/kg/day	5.7E-04	mg/kg/day	1.1E-03
				Chloroform	1.6E-05	mg/m³	1.1E-08	NA	8.1E-02	1/mg/kg/day	9.2E-10	8.0E-07	mg/kg/day	1.4E-02	mg/kg/day	5.7E-05
				Tetrachloroethene	1.0E-05	mg/m³	7.0E-09	NA	1.0E-02	1/mg/kg/day	7.0E-11	4.9E-07	mg/kg/day	1.4E-01	mg/kg/day	3.5E-06
				Trichloroethene	2.0E-03	mg/m³	1.4E-06	NA	4.0E-01	1/mg/kg/day	5.7E-07	9.9E-05	mg/kg/day	NA	NA	NA
				Vinyl chloride	2.1E-05	mg/m³	1.5E-08	NA	1.5E-02	1/mg/kg/day	2.2E-10	1.0E-06	mg/kg/day	2.8E-02	mg/kg/day	3.6E-05
				cis-1,2-Dichloroethene	4.6E-04	mg/m³	3.2E-07	NA	NA	NA	NA	2.3E-05	mg/kg/day	NA	NA	NA
				trans-1,2-Dichloroethene	3.5E-05	mg/m³	2.5E-08	NA	NA	NA	NA	1.7E-06	mg/kg/day	NA	NA	NA
			Exp. Route Total								5.8E-07					1.2E-03
		Exposure Point Total									5.8E-07					1.2E-03
	Exposure Medium Total										5.8E-07					1.2E-03
Groundwater - Bedrock Aquifer Total											2.7E-06					1.1E-01
							Total of Receptor Risks Across All Media				2.7E-06	Total of Receptor Hazards Across All Media				1.1E-01

Notes-
DAevent for exposure to groundwater calculated on Table G-7.4.CT Supplement A.
EPC for inhalation of volatiles from groundwater from shower calculated on Table G-7.4.CT Supplement B.
Subchronic RfD values. Chronic used if Subchronic is NA.

Table 7.4.CT Supplement A
Calculation of DAevent
Construction Worker, Bedrock Aquifer Groundwater
Site 49 RFI Report
NSWC - White Oak
Silver Spring, Maryland

Chemical of Potential Concern	Groundwater Water Concentration (CW) (µg/L)	Permeability Coefficient (Kp) (cm/hr)	B (dimensionless)	Lag Time (τ_{event}) (hr)	t* (hr)	Fraction Absorbed Water (FA) (dimensionless)	Duration of Event (tevent) (hr)	DAevent (mg/cm²-event)	Eq
1,2-Dibromoethane	1.4E+00	3.3E-03	1.1E-02	1.2E+00	2.8E+00	1.0E+00	4	5.5E-08	3
Chloroform	1.8E+00	6.8E-03	2.9E-02	5.0E-01	1.2E+00	1.0E+00	4	4.7E-08	3
Tetrachloroethylene	1.2E+00	3.3E-02	1.6E-01	9.1E-01	2.2E+00	1.0E+00	4	2.1E-07	3
Trichloroethylene	2.3E+02	1.2E-02	5.3E-02	5.8E-01	1.4E+00	1.0E+00	4	1.1E-05	3
Vinyl chloride	1.9E+00	5.6E-03	1.7E-02	2.4E-01	5.7E-01	1.0E+00	4	1.3E-07	3
cis-1,2-Dichloroethene	4.8E+01	7.7E-03	2.9E-02	3.7E-01	8.9E-01	1.0E+00	4	1.2E-06	3
trans-1,2-Dichloroethene	3.6E+00	7.7E-03	2.9E-02	3.7E-01	8.9E-01	1.0E+00	4	9.4E-08	3
Aluminum	6.5E+02	1.0E-03	NA	NA	NA	NA	4	2.6E-06	1
Arsenic	2.0E+00	1.0E-03	NA	NA	NA	NA	4	8.1E-09	1
Chromium	1.5E+01	2.0E-03	NA	NA	NA	NA	4	1.2E-07	1
Copper	6.2E+00	1.0E-03	NA	NA	NA	NA	4	2.5E-08	1
Iron	2.0E+03	1.0E-03	NA	NA	NA	NA	4	7.9E-06	1
Manganese	1.9E+02	1.0E-03	NA	NA	NA	NA	4	7.7E-07	1
Nickel	2.3E+01	2.0E-04	NA	NA	NA	NA	4	1.9E-08	1
Vanadium	2.4E+00	1.0E-03	NA	NA	NA	NA	4	9.7E-09	1

Inorganics: DAevent (mg/cm2-event) =
Kp x CW x tevent x 0.001 mg/ug x 0.001 l/cm^3 (eq 1)

Organics: DAevent (mg/cm2-event) =
tevent<t*: DAevent (mg/cm2-event) =
2 x FA x Kp x CW x (sqrt((6 x τ_{event} x tevent)/π)) x 0.001 mg/ug x 0.001 l/cm^3 (eq 2)

tevent>t*: DAevent (mg/cm2-event) =
FA x Kp x CW x (tevent/(1+B) + 2 x τ_{event} x ((1 + 3xB + 3xB^2)/(1+B)^2) x 0.001 mg/ug x 0.001 l/cm3 (eq 3)

Notes:
Permeability constants from EPA 2001, Risk Assessment Guidance for Superfund Volume I: Human Health Evaluation Manual (Part E, Supplemental Guidance for Dermal Risk Assessment). EPA/540/R/99/005.
NA - not applicable.

Table 7.4.CT Supplement B
Inhalation of Volatiles from Groundwater During Construction
Inhalation Exposure Concentrations Calculated Using a Two-Film Volatilization Model
Future Construction Worker Senario
Site 49 RFI Report
NSWC - White Oak
Silver Spring, Maryland

Chemical	Cw (µg/L)	MW (mol/gram)	K_H (unitless)	k_l (cm/hr)	k_g (cm/hr)	K_v (cm/hr)	ER (mg/hr)	ERa (g/sec-m^2)	Ca (mg/m^3)
1,2-Dichloropropane	1.39E+00	1.13E+02	1.15E-01	3.21E+00	1.95E+03	3.16E+00	4.40E+00	4.53E-10	1.29E-05
Chloroform	1.79E+00	1.19E+02	1.50E-01	3.17E+00	1.92E+03	3.13E+00	5.59E+00	5.75E-10	1.63E-05
Tetrachloroethene	1.19E+00	1.66E+02	7.54E-01	2.92E+00	1.77E+03	2.91E+00	3.45E+00	3.55E-10	1.01E-05
Trichloroethene	2.26E+02	1.31E+02	4.22E-01	3.09E+00	1.88E+03	3.08E+00	6.96E+02	7.16E-08	2.03E-03
Vinyl Chloride	1.92E+00	6.30E+01	1.11E+00	3.71E+00	2.25E+03	3.71E+00	7.10E+00	7.31E-10	2.08E-05
cis-1,2-Dichloroethene	4.79E+01	9.70E+01	1.67E-01	3.33E+00	2.02E+03	3.30E+00	1.58E+02	1.63E-08	4.62E-04
trans-1,2-Dichloroethene	3.63E+00	9.70E+01	3.85E-01	3.33E+00	2.02E+03	3.32E+00	1.21E+01	1.24E-09	3.52E-05

Equations

Equation 1 $Kv = 1/(1/k_l + 1/K_H{*}K_g)$

Equation 2 $k_g = 700(18/MW)^{1/4}V$

Equation 3 $k_l = (32/MW)^{1/4}Ka'$

Equation 4 $ER = Kv * Cw * L/1000\ cm^3 * mg/1000\ \mu g$

Equation 5 $ERa = ER * g/1000\ mg * hr/60\ min * min/60\ sec * 1/A$

Variables	Units	Exposure Assumptions
Cw = groundwater concentration	(µg/L)	chem-specific
MW = molecular weight	(mol/gram)	chem-specific
K_H - Henry's Law Constant	(unitless)	chem-specific
Kv = volatilization rate	(cm/hr)	Solved by Eq 1
k_g = gas phase transfer coefficient	(cm/hr)	Solved by Eq 2
k_l = liquid phase transfer coefficient	(cm/hr)	Solved by Eq 3
V = wind speed	(m/s)	4.4
Ka' = aeration rate	(cm/hr)	0.0633
ER = emission rate	(mg/hr)	Solved by Eq 4
A = area of excavation (utility ditch)	(m^2)	2,700
Era = area emission rate	(g/sec-m^2)	Solved by Eq 5
Ca = air concentration	(mg/m^3)	Solved using SCREEN3 model

Note: aeration rate based on aeration rate for small pond (0.1/day) multiplied by depth of water

TABLE 9.1.RME
SUMMARY OF RECEPTOR RISKS AND HAZARDS FOR COPCs
REASONABLE MAXIMUM EXPOSURE
Site 49 RFI Report
NSWC - White Oak
Silver Spring, Maryland

Scenario Timeframe: Future
Receptor Population: Resident
Receptor Age: Adult

Medium	Exposure Medium	Exposure Point	Chemical of Potential Concern	Carcinogenic Risk				Non-Carcinogenic Hazard Quotient				
				Ingestion	Inhalation	Dermal	Exposure Routes Total	Primary Target Organ(s)	Ingestion	Inhalation	Dermal	Exposure Routes Total
Groundwater	Groundwater	Bedrock Aquifer - Tap Water	1,2-Dibromoethane					NA	NA		NA	0.0E+00
			Chloroform					Liver	6.8E-02		6.2E-03	7.4E-02
			Tetrachloroethene					Liver,Weight Gain	3.0E-03		1.8E-03	4.8E-03
			Trichloroethene					Liver, Kidney, Fetus	2.0E+01		3.5E+00	2.4E+01
			Vinyl chloride					Liver	5.2E-02		4.6E-03	5.7E-02
			cis-1,2-Dichloroethene					Blood	3.0E+00		2.7E-01	3.3E+00
			trans-1,2-Dichloroethene					Blood	4.3E-02		3.9E-03	4.7E-02
			Aluminum					Central Nervous System	1.4E-01		7.1E-04	1.4E-01
			Chromium					NOAEL	6.9E-01		2.9E-01	9.8E-01
			Iron					Gastrointestinal	1.3E+00		6.7E-03	1.3E+00
			Manganese					Central Nervous System	3.1E+00		4.1E-01	3.5E+00
			Nickel					Decreased Weight	7.9E-02		2.1E-03	8.1E-02
			Vanadium					Kidney	4.6E-01		9.2E-02	5.5E-01
			Chemical Total						2.9E+01		4.6E+00	3.4E+01
		Exposure Point Total					0.0E+00					3.4E+01
	Exposure Medium Total						0.0E+00					3.4E+01
Groundwater	Air	Bedrock Aquifer - Water Vapors at Showerhead	1,2-Dibromoethane					Sperm		1.6E-02		1.6E-02
			Chloroform					Liver, Kidney		9.1E-05		9.1E-05
			Tetrachloroethene					Liver, Whole Body		3.8E-07		3.8E-07
			Trichloroethene					NA		NA		0.0E+00
			Vinyl chloride					Liver		1.4E-05		1.4E-05
			cis-1,2-Dichloroethene					NA		NA		0.0E+00
			trans-1,2-Dichloroethene					NA		NA		0.0E+00
			Chemical Total							1.7E-02		1.7E-02
		Exposure Point Total					0.0E+00					1.7E-02
	Exposure Medium Total						0.0E+00					1.7E-02
Medium Total							0.0E+00					3.4E+01
Receptor Total							0.0E+00				Receptor HI Total	3.4E+01

TABLE 9.1.RME
SUMMARY OF RECEPTOR RISKS AND HAZARDS FOR COPCs
REASONABLE MAXIMUM EXPOSURE
Site 49 RFI Report
NSWC - White Oak
Silver Spring, Maryland

Scenario Timeframe: Future
Receptor Population: Resident
Receptor Age: Adult

Medium	Exposure Medium	Exposure Point	Chemical of Potential Concern	Carcinogenic Risk				Non-Carcinogenic Hazard Quotient				
				Ingestion	Inhalation	Dermal	Exposure Routes Total	Primary Target Organ(s)	Ingestion	Inhalation	Dermal	Exposure Routes Total

Total Liver HI Across All Media =	2.4E+01
Total Weight Gain HI Across All Media =	4.8E-03
Total Kidney HI Across All Media =	2.4E+01
Total Blood HI Across All Media =	3.3E+00
Total CNS HI Across All Media =	3.7E+00
Total NOAEL HI Across All Media =	9.8E-01
Total Gastrointestinal HI Across All Media =	1.3E+00
Total Decreased Weight HI Across All Media =	8.1E-02
Total Sperm HI Across All Media =	1.6E-02
Total Whole Body HI Across All Media =	3.8E-07
Total Endocrine System HI Across All Media =	0.0E+00

TABLE 9.2.RME
SUMMARY OF RECEPTOR RISKS AND HAZARDS FOR COPCs
REASONABLE MAXIMUM EXPOSURE
Site 49 RFI Report
NSWC - White Oak
Silver Spring, Maryland

Scenario Timeframe: Future
Receptor Population: Resident
Receptor Age: Child

Medium	Exposure Medium	Exposure Point	Chemical of Potential Concern	Carcinogenic Risk				Non-Carcinogenic Hazard Quotient				
				Ingestion	Inhalation	Dermal	Exposure Routes Total	Primary Target Organ(s)	Ingestion	Inhalation	Dermal	Exposure Routes Total
Groundwater	Groundwater	Bedrock Aquifer - Tap Water	1,2-Dibromoethane					NA	NA		NA	0.0E+00
			Chloroform					Liver	1.6E-01		1.4E-02	1.7E-01
			Tetrachloroethene					Liver,Weight Gain	7.0E-03		4.0E-03	1.1E-02
			Trichloroethene					Liver, Kidney, Fetus	4.7E+01		7.8E+00	5.5E+01
			Vinyl chloride					Liver	1.2E-01		1.4E-02	1.4E-01
			cis-1,2-Dichloroethene					Blood	7.0E+00		6.0E-01	7.6E+00
			trans-1,2-Dichloroethene					Blood	1.0E-01		8.7E-03	1.1E-01
			Aluminum					Central Nervous System	3.2E-01		2.1E-03	3.2E-01
			Chromium					NOAEL	1.6E+00		8.5E-01	2.5E+00
			Iron					Gastrointestinal	3.0E+00		2.0E-02	3.0E+00
			Manganese					Central Nervous System	7.3E+00		1.2E+00	8.5E+00
			Nickel					Decreased Weight	1.8E-01		6.1E-03	1.9E-01
			Vanadium					Kidney	1.1E+00		2.7E-01	1.3E+00
			Chemical Total						6.8E+01		1.1E+01	7.9E+01
		Exposure Point Total					0.0E+00					7.9E+01
	Exposure Medium Total						0.0E+00					7.9E+01
Medium Total							0.0E+00					7.9E+01
Receptor Total							0.0E+00				Receptor HI Total	7.9E+01

Total Liver HI Across All Media =	5.5E+01
Total Weight Gain HI Across All Media =	1.1E-02
Total Kidney HI Across All Media =	5.6E+01
Total Blood HI Across All Media =	7.7E+00
Total CNS HI Across All Media =	8.8E+00
Total NOAEL HI Across All Media =	2.5E+00
Total Gastrointestinal HI Across All Media =	3.0E+00
Total Decreased Weight HI Across All Media =	1.9E-01

TABLE 9.3.RME

SUMMARY OF RECEPTOR RISKS AND HAZARDS FOR COPCs

REASONABLE MAXIMUM EXPOSURE

Site 49 RFI Report

NSWC - White Oak

Silver Spring, Maryland

Scenario Timeframe: Future
Receptor Population: Resident
Receptor Age: Child/Adult

Medium	Exposure Medium	Exposure Point	Chemical of Potential Concern	Carcinogenic Risk				Non-Carcinogenic Hazard Quotient				
				Ingestion	Inhalation	Dermal	Exposure Routes Total	Primary Target Organ(s)	Ingestion	Inhalation	Dermal	Exposure Routes Total
Groundwater	Groundwater	Bedrock Aquifer - Tap Water	1,2-Dibromoethane	4.2E-02		7.9E-02	1.2E-01					
			Chloroform	NA		NA	0.0E+00					
			Tetrachloroethene	8.9E-06		2.4E-04	2.5E-04					
			Trichloroethene	7.2E-04		5.8E-03	6.5E-03					
			Vinyl chloride	3.3E-04		3.6E-05	3.7E-04					
			cis-1,2-Dichloroethene	NA		NA	0.0E+00					
			trans-1,2-Dichloroethene	NA		NA	0.0E+00					
			Aluminum	NA		NA	0.0E+00					
			Chromium	NA		NA	0.0E+00					
			Iron	NA		NA	0.0E+00					
			Manganese	NA		NA	0.0E+00					
			Nickel	NA		NA	0.0E+00					
			Vanadium	NA		NA	0.0E+00					
			Chemical Total	4.3E-02		8.5E-02	1.3E-01					
		Exposure Point Total					1.3E-01					0.0E+00
	Exposure Medium Total						1.3E-01					0.0E+00
Groundwater	Air	Bedrock Aquifer - Water Vapors at Showerhead	1,2-Dibromoethane		2.4E-07		2.4E-07					
			Chloroform		3.5E-08		3.5E-08					
			Tetrachloroethene		3.6E-10		3.6E-10					
			Trichloroethene		4.7E-07		4.7E-07					
			Vinyl chloride		2.0E-09		2.0E-09					
			cis-1,2-Dichloroethene		NA		0.0E+00					
			trans-1,2-Dichloroethene		NA		0.0E+00					
			Chemical Total		7.5E-07		7.5E-07					0.0E+00
		Exposure Point Total					7.5E-07					0.0E+00
	Exposure Medium Total						7.5E-07					0.0E+00
Medium Total							1.3E-01					0.0E+00
[illegible]r Total							1.3E-01				Receptor HI Total	0.0E+

TABLE 9.4.RME
SUMMARY OF RECEPTOR RISKS AND HAZARDS FOR COPCs
REASONABLE MAXIMUM EXPOSURE
Site 49 RFI Report
NSWC - White Oak
Silver Spring, Maryland

Scenario Timeframe: Future
Receptor Population: Construction Worker
Receptor Age: Adult

Medium	Exposure Medium	Exposure Point	Chemical of Potential Concern	Carcinogenic Risk				Non-Carcinogenic Hazard Quotient				
				Ingestion	Inhalation	Dermal	Exposure Routes Total	Primary Target Organ(s)	Ingestion	Inhalation	Dermal	Exposure Routes Total
Groundwater	Groundwater	Bedrock Aquifer - Water in Excavation Pit	1,2-Dibromoethane			9.4E-05	9.4E-05	NA			NA	0.0E+00
			Chloroform			NA	0.0E+00	Liver			2.7E-03	2.7E-03
			Tetrachloroethene			6.1E-08	6.1E-08	Liver,Weight Gain			7.9E-04	7.9E-04
			Trichloroethene			1.5E-06	1.5E-06	Liver, Kidney, Fetus			1.5E+00	1.5E+00
			Vinyl chloride			2.3E-07	2.3E-07	Liver			7.5E-03	7.5E-03
			cis-1,2-Dichloroethene			NA	0.0E+00	Blood			1.2E-02	1.2E-02
			trans-1,2-Dichloroethene			NA	0.0E+00	Blood			1.7E-04	1.7E-04
			Aluminum			NA	0.0E+00	Central Nervous System			8.4E-03	8.4E-03
			Arsenic			3.6E-08	3.6E-08	Skin, Vascular			5.6E-03	5.6E-03
			Chromium			NA	0.0E+00	NOAEL			8.5E-01	8.5E-01
			Copper			NA	0.0E+00	Gastrointestinal			1.2E-03	1.2E-03
			Iron			NA	0.0E+00	Gastrointestinal			5.7E-02	5.7E-02
			Manganese			NA	0.0E+00	Central Nervous System			6.6E-01	6.6E-01
			Nickel			NA	0.0E+00	Decreased Weight			3.7E-02	3.7E-02
			Vanadium			NA	0.0E+00	Kidney			5.1E-01	5.1E-01
			Chemical Total			9.6E-05	9.6E-05				3.7E+00	3.7E+00
		Exposure Point Total					9.6E-05					3.7E+00
	Exposure Medium Total						9.6E-05					3.7E+00
Groundwater	Air	Bedrock Aquifer - Water Vapors at Excavtion Pit	1,2-Dibromoethane		3.3E-07		3.3E-07	Sperm		5.3E-02		5.3E-02
			Chloroform		2.6E-08		2.6E-08	Liver, Kidney		1.6E-03		1.6E-03
			Tetrachloroethene		2.6E-10		2.6E-10	Liver, Whole Body		6.5E-06		6.5E-06
			Trichloroethene		3.3E-07		3.3E-07	NA		NA		0.0E+00
			Vinyl chloride		1.3E-09		1.3E-09	Liver		2.2E-04		2.2E-04
			cis-1,2-Dichloroethene		NA		0.0E+00	NA		NA		0.0E+00
			trans-1,2-Dichloroethene		NA		0.0E+00	NA		NA		0.0E+00
			Chemical Total		6.9E-07		6.9E-07			5.5E-02		5.5E-02
		Exposure Point Total					6.9E-07					5.5E-02
	Exposure Medium Total						6.9E-07					5.5E-02
Medium Total							9.7E-05					3.7E+00
Receptor Total							9.7E-05				Receptor HI Total	3.7E+00

TABLE 9.4.RME
SUMMARY OF RECEPTOR RISKS AND HAZARDS FOR COPCs
REASONABLE MAXIMUM EXPOSURE
Site 49 RFI Report
NSWC - White Oak
Silver Spring, Maryland

Scenario Timeframe: Future
Receptor Population: Construction Worker
Receptor Age: Adult

Medium	Exposure Medium	Exposure Point	Chemical of Potential Concern	Carcinogenic Risk				Non-Carcinogenic Hazard Quotient				
				Ingestion	Inhalation	Dermal	Exposure Routes Total	Primary Target Organ(s)	Ingestion	Inhalation	Dermal	Exposure Routes Total

Total Liver HI Across All Media =	1.6E+00
Total Weight Gain HI Across All Media =	7.9E-04
Total Kidney HI Across All Media =	2.0E+00
Total Blood HI Across All Media =	1.2E-02
Total Skin HI Across All Media =	5.6E-03
Total Vascular HI Across All Media =	5.6E-03
Total CNS HI Across All Media =	9.6E-03
Total NOAEL HI Across All Media =	8.5E-01
Total Gastrointestinal HI Across All Media =	5.8E-02
Total Decreased Weight HI Across All Media =	3.7E-02
Total Sperm HI Across All Media =	5.3E-02
Total Whole Body HI Across All Media =	6.5E-06
Total Endocrine System HI Across All Media =	0.0E+00

TABLE 9.1.CT
SUMMARY OF RECEPTOR RISKS AND HAZARDS FOR COPCs
CENTRAL TENDENCY
Site 49 RFI Report
NSWC - White Oak
Silver Spring, Maryland

Scenario Timeframe: Future
Receptor Population: Resident
Receptor Age: Adult

Medium	Exposure Medium	Exposure Point	Chemical of Potential Concern	Carcinogenic Risk				Non-Carcinogenic Hazard Quotient				
				Ingestion	Inhalation	Dermal	Exposure Routes Total	Primary Target Organ(s)	Ingestion	Inhalation	Dermal	Exposure Routes Total
Groundwater	Groundwater	Bedrock Aquifer - Tap Water	1,2-Dibromoethane					NA	NA		NA	0.0E+00
			Chloroform					Liver	2.3E-03		2.0E-04	2.5E-03
			Tetrachloroethene					Liver,Weight Gain	1.5E-03		8.5E-04	2.4E-03
			Trichloroethene					Liver, Kidney, Fetus	4.8E-01		7.8E-02	5.6E-01
			Vinyl chloride					Liver	8.2E-03		4.4E-04	8.6E-03
			cis-1,2-Dichloroethene					Blood	6.1E-02		5.1E-03	6.7E-02
			trans-1,2-Dichloroethene					Blood	2.3E-03		1.9E-04	2.5E-03
			Aluminum					Central Nervous System	6.1E-04		2.0E-06	6.1E-04
			Chromium					NOAEL	6.1E-03		1.6E-03	7.7E-03
			Iron					Gastrointestinal	1.5E-02		5.0E-05	1.5E-02
			Manganese					Central Nervous System	9.6E-02		7.7E-03	1.0E-01
			Nickel					Decreased Weight	6.1E-03		9.9E-05	6.2E-03
			Vanadium					Kidney	9.8E-03		1.2E-03	1.1E-02
			Chemical Total						6.9E-01		9.6E-02	7.9E-01
		Exposure Point Total					0.0E+00					7.9E-01
	Exposure Medium Total						0.0E+00					7.9E-01
Groundwater	Air	Bedrock Aquifer - Water Vapors at Showerhead	1,2-Dibromoethane					Sperm		4.6E-04		4.6E-04
			Chloroform					Liver, Kidney		4.4E-06		4.4E-06
			Tetrachloroethene					Liver, Whole Body		2.7E-07		2.7E-07
			Trichloroethene					NA		NA		0.0E+00
			Vinyl chloride					Liver		3.1E-06		3.1E-06
			cis-1,2-Dichloroethene					NA		NA		0.0E+00
			trans-1,2-Dichloroethene					NA		NA		0.0E+00
			Chemical Total							4.7E-04		4.7E-04
		Exposure Point Total					0.0E+00					4.7E-04
	Exposure Medium Total						0.0E+00					4.7E-04
Medium Total							0.0E+00					7.9E-01
Receptor Total							0.0E+00				Receptor HI Total	7.9E-01

TABLE 9.1.CT

SUMMARY OF RECEPTOR RISKS AND HAZARDS FOR COPCs

CENTRAL TENDENCY

Site 49 RFI Report

NSWC - White Oak

Silver Spring, Maryland

Scenario Timeframe: Future
Receptor Population: Resident
Receptor Age: Adult

Medium	Exposure Medium	Exposure Point	Chemical of Potential Concern	Carcinogenic Risk				Non-Carcinogenic Hazard Quotient				
				Ingestion	Inhalation	Dermal	Exposure Routes Total	Primary Target Organ(s)	Ingestion	Inhalation	Dermal	Exposure Routes Total

Total Liver HI Across All Media =	5.7E-01
Total Weight Gain HI Across All Media =	2.4E-03
Total Kidney HI Across All Media =	5.6E-01
Total Blood HI Across All Media =	6.9E-02
Total CNS HI Across All Media =	1.0E-01
Total NOAEL HI Across All Media =	7.7E-03
Total Gastrointestinal HI Across All Media =	1.5E-02
Total Decreased Weight HI Across All Media =	6.2E-03
Total Sperm HI Across All Media =	4.6E-04
Total Whole Body HI Across All Media =	2.7E-07
Total Endocrine System HI Across All Media =	0.0E+00

TABLE 9.2.CT
SUMMARY OF RECEPTOR RISKS AND HAZARDS FOR COPCs
CENTAL TENDENCY
Site 49 RFI Report
NSWC - White Oak
Silver Spring, Maryland

Scenario Timeframe: Future
Receptor Population: Resident
Receptor Age: Child

Medium	Exposure Medium	Exposure Point	Chemical of Potential Concern	Carcinogenic Risk				Non-Carcinogenic Hazard Quotient				
				Ingestion	Inhalation	Dermal	Exposure Routes Total	Primary Target Organ(s)	Ingestion	Inhalation	Dermal	Exposure Routes Total
Groundwater	Groundwater	Bedrock Aquifer - Tap Water	1,2-Dibromoethane					NA	NA		NA	0.0E+00
			Chloroform					Liver	7.6E-03		3.8E-04	8.0E-03
			Tetrachloroethene					Liver,Weight Gain	5.1E-03		1.7E-03	6.7E-03
			Trichloroethene					Liver, Kidney, Fetus	1.6E+00		1.5E-01	1.8E+00
			Vinyl chloride					Liver	2.7E-02		1.0E-03	2.8E-02
			cis-1,2-Dichloroethene					Blood	2.0E-01		1.0E-02	2.1E-01
			trans-1,2-Dichloroethene					Blood	7.8E-03		3.8E-04	8.1E-03
			Aluminum					Central Nervous System	2.0E-03		4.4E-06	2.0E-03
			Chromium					NOAEL	2.0E-02		3.6E-03	2.4E-02
			Iron					Gastrointestinal	5.1E-02		1.1E-04	5.2E-02
			Manganese					Central Nervous System	3.2E-01		1.7E-02	3.4E-01
			Nickel					Decreased Weight	2.0E-02		2.2E-04	2.1E-02
			Vanadium					Kidney	3.3E-02		2.7E-03	3.5E-02
			Chemical Total						2.3E+00		1.9E-01	2.5E+00
		Exposure Point Total					0.0E+00					2.5E+00
	Exposure Medium Total						0.0E+00					2.5E+00
Medium Total							0.0E+00					2.5E+00
Receptor Total							0.0E+00				Receptor HI Total	2.5E+00

Total Liver HI Across All Media =	1.8E+00
Total Weight Gain HI Across All Media =	6.7E-03
Total Kidney HI Across All Media =	1.8E+00
Total Blood HI Across All Media =	2.2E-01
Total CNS HI Across All Media =	3.4E-01
Total NOAEL HI Across All Media =	2.4E-02
Total Gastrointestinal HI Across All Media =	5.2E-02
Total Decreased Weight HI Across All Media =	2.1E-02

TABLE 9.3.CT

SUMMARY OF RECEPTOR RISKS AND HAZARDS FOR COPCs

CENTRAL TENDENCY

Site 49 RFI Report

NSWC - White Oak

Silver Spring, Maryland

Scenario Timeframe: Future
Receptor Population: Resident
Receptor Age: Child/Adult

Medium	Exposure Medium	Exposure Point	Chemical of Potential Concern	Carcinogenic Risk				Non-Carcinogenic Hazard Quotient				
				Ingestion	Inhalation	Dermal	Exposure Routes Total	Primary Target Organ(s)	Ingestion	Inhalation	Dermal	Exposure Routes Total
Groundwater	Groundwater	Bedrock Aquifer - Tap Water	1,2-Dibromoethane	6.3E-04		4.3E-04	1.1E-03					
			Chloroform	NA		NA	0.0E+00					
			Tetrachloroethene	3.4E-06		6.5E-05	6.9E-05					
			Trichloroethene	1.3E-05		7.3E-05	8.7E-05					
			Vinyl chloride	9.9E-05		3.8E-06	1.0E-04					
			cis-1,2-Dichloroethene	NA		NA	0.0E+00					
			trans-1,2-Dichloroethene	NA		NA	0.0E+00					
			Aluminum	NA		NA	0.0E+00					
			Chromium	NA		NA	0.0E+00					
			Iron	NA		NA	0.0E+00					
			Manganese	NA		NA	0.0E+00					
			Nickel	NA		NA	0.0E+00					
			Kidney	NA		NA	0.0E+00					
			Chemical Total	7.4E-04		5.7E-04	1.3E-03					
		Exposure Point Total					1.3E-03					0.0E+00
	Exposure Medium Total						1.3E-03					0.0E+00
Groundwater	Air	Bedrock Aquifer - Water Vapors at Showerhead	1,2-Dibromoethane		NA		0.0E+00					
			Chloroform		6.4E-10		6.4E-10					
			Tetrachloroethene		9.8E-11		9.8E-11					
			Trichloroethene		6.1E-09		6.1E-09					
			Vinyl chloride		1.7E-10		1.7E-10					
			cis-1,2-Dichloroethene		NA		0.0E+00					
			trans-1,2-Dichloroethene		NA		0.0E+00					
			Chemical Total		7.0E-09		7.0E-09					0.0E+00
		Exposure Point Total					7.0E-09					0.0E+00
	Exposure Medium Total						7.0E-09					0.0E+00
Medium Total							1.3E-03					0.0E+00
P[illegible]or Total							1.3E-03				Receptor HI Total	0.0E+0[illegible]

TABL.. .4.CT

SUMMARY OF RECEPTOR RISKS AND HAZARDS FOR COPCs

CENTRAL TENDENCY

Site 49 RFI Report

NSWC - White Oak

Silver Spring, Maryland

Scenario Timeframe: Future
Receptor Population: Construction Worker
Receptor Age: Adult

Medium	Exposure Medium	Exposure Point	Chemical of Potential Concern	Carcinogenic Risk				Non-Carcinogenic Hazard Quotient				
				Ingestion	Inhalation	Dermal	Exposure Routes Total	Primary Target Organ(s)	Ingestion	Inhalation	Dermal	Exposure Routes Total
Groundwater	Groundwater	Bedrock Aquifer - Water in Excavation Pit	1,2-Dibromoethane			2.0E-06	2.0E-06	NA			NA	0.0E+00
			Chloroform			NA	0.0E+00	Liver			1.4E-04	1.4E-04
			Tetrachloroethene			4.7E-08	4.7E-08	Liver,Weight Gain			6.1E-04	6.1E-04
			Trichloroethene			5.3E-08	5.3E-08	Liver, Kidney, Fetus			5.6E-02	5.6E-02
			Vinyl chloride			3.9E-08	3.9E-08	Liver			1.3E-03	1.3E-03
			cis-1,2-Dichloroethene			NA	0.0E+00	Blood			3.6E-04	3.6E-04
			trans-1,2-Dichloroethene			NA	0.0E+00	Blood			1.4E-05	1.4E-05
			Aluminum			NA	0.0E+00	Central Nervous System			7.7E-05	7.7E-05
			Arsenic			5.1E-09	5.1E-09	Skin, Vascular			8.0E-04	8.0E-04
			Chromium			NA	0.0E+00	NOAEL			7.0E-03	7.0E-03
			Copper			NA	0.0E+00	Gastrointestinal			1.8E-05	1.8E-05
			Iron			NA	0.0E+00	Gastrointestinal			7.7E-04	7.7E-04
			Manganese			NA	0.0E+00	Central Nervous System			2.8E-02	2.8E-02
			Nickel			NA	0.0E+00	Decreased Weight			6.9E-04	6.9E-04
			Vanadium			NA	0.0E+00	Kidney			1.1E-02	1.1E-02
			Chemical Total			2.1E-06	2.1E-06				1.1E-01	1.1E-01
		Exposure Point Total					2.1E-06					1.1E-01
	Exposure Medium Total						2.1E-06					1.1E-01
Groundwater	Air	Bedrock Aquifer - Water Vapors at Excavtion Pit	1,2-Dibromoethane		6.8E-09		6.8E-09	Sperm		1.1E-03		1.1E-03
			Chloroform		9.2E-10		9.2E-10	Liver, Kidney		5.7E-05		5.7E-05
			Tetrachloroethene		7.0E-11		7.0E-11	Liver, Whole Body		3.5E-06		3.5E-06
			Trichloroethene		5.7E-07		5.7E-07	NA		NA		0.0E+00
			Vinyl chloride		2.2E-10		2.2E-10	Liver		3.6E-05		3.6E-05
			cis-1,2-Dichloroethene		NA		0.0E+00	NA		NA		0.0E+00
			trans-1,2-Dichloroethene		NA		0.0E+00	NA		NA		0.0E+00
			Chemical Total		5.8E-07		5.8E-07			1.2E-03		1.2E-03
		Exposure Point Total					5.8E-07					1.2E-03
	Exposure Medium Total						5.8E-07					1.2E-03
Medium Total							2.7E-06					1.1E-01
Receptor Total							2.7E-06				Receptor HI Total	1.1E-01

TABLE 9.4.CT

SUMMARY OF RECEPTOR RISKS AND HAZARDS FOR COPCs

CENTRAL TENDENCY

Site 49 RFI Report

NSWC - White Oak

Silver Spring, Maryland

Scenario Timeframe: Future
Receptor Population: Construction Worker
Receptor Age: Adult

Medium	Exposure Medium	Exposure Point	Chemical of Potential Concern	Carcinogenic Risk				Non-Carcinogenic Hazard Quotient				
				Ingestion	Inhalation	Dermal	Exposure Routes Total	Primary Target Organ(s)	Ingestion	Inhalation	Dermal	Exposure Routes Total
											Total Liver HI Across All Media =	5.8E-02
											Total Weight Gain HI Across All Media =	6.1E-04
											Total Kidney HI Across All Media =	6.7E-02
											Total Blood HI Across All Media =	3.8E-04
											Total Skin HI Across All Media =	8.0E-04
											Total Vascular HI Across All Media =	8.0E-04
											Total CNS HI Across All Media =	9.5E-05
											Total NOAEL HI Across All Media =	7.0E-03
											Total Gastrointestinal HI Across All Media =	7.9E-04
											Total Decreased Weight HI Across All Media =	6.9E-04
											Total Sperm HI Across All Media =	1.1E-03
											Total Whole Body HI Across All Media =	3.5E-06
											Total Endocrine System HI Across All Media =	0.0E+00

TABLE10.1.RME
RISK SUMMARY
REASONABLE MAXIMUM EXPOSURE
Site 49 RFI Report
NSWC - White Oak
Silver Spring, Maryland

Scenario Timeframe: Future
Receptor Population: Resident
Receptor Age: Adult

Medium	Exposure Medium	Exposure Point	Chemical of Potential Concern	Carcinogenic Risk				Non-Carcinogenic Hazard Quotient				
				Ingestion	Inhalation	Dermal	Exposure Routes Total	Primary Target Organ(s)	Ingestion	Inhalation	Dermal	Exposure Routes Total
Groundwater	Groundwater	Bedrock Aquifer - Tap Water	Trichloroethene					Liver, Kidney, Fetus	2.0E+01		3.5E+00	2.4E+01
			cis-1,2-Dichloroethene					Blood	3.0E+00		2.7E-01	3.3E+00
			Aluminum					Central Nervous System	1.4E-01		7.1E-04	1.4E-01
			Chromium					NOAEL	6.9E-01		2.9E-01	9.8E-01
			Iron					Gastrointestinal	1.3E+00		6.7E-03	1.3E+00
			Manganese					Central Nervous System	3.1E+00		4.1E-01	3.5E+00
			Vanadium					Kidney	4.6E-01		9.2E-02	5.5E-01
			Chemical Total						2.9E+01		4.5E+00	3.3E+01
		Exposure Point Total					0.0E+00					3.3E+01
	Exposure Medium Total						0.0E+00					3.3E+01
Medium Total							0.0E+00					3.3E+01
Receptor Total							0.0E+00				Receptor HI Total	3.3E+01

Total Liver HI Across All Media =	2.4E+01
Total Kidney HI Across All Media =	2.4E+01
Total Fetus HI Across All Media =	2.4E+01
Total Blood HI Across All Media =	3.3E+00
Total CNS HI Across All Media =	3.7E+00
Total NOAEL HI Across All Media =	9.8E-01
Total Gastrointestinal HI Across All Media =	1.3E+00

TABLE 10.2.RME
RISK SUMMARY
REASONABLE MAXIMUM EXPOSURE
Site 49 RFI Report
NSWC - White Oak
Silver Spring, Maryland

Scenario Timeframe: Future
Receptor Population: Resident
Receptor Age: Child

Medium	Exposure Medium	Exposure Point	Chemical of Potential Concern	Carcinogenic Risk				Non-Carcinogenic Hazard Quotient				
				Ingestion	Inhalation	Dermal	Exposure Routes Total	Primary Target Organ(s)	Ingestion	Inhalation	Dermal	Exposure Routes Total
Groundwater	Groundwater	Bedrock Aquifer - Tap Water	Chloroform					Liver	1.6E-01		1.4E-02	1.7E-01
			Trichloroethene					Liver, Kidney, Fetus	4.7E+01		7.8E+00	5.5E+01
			Vinyl chloride					Liver	1.2E-01		1.4E-02	1.4E-01
			cis-1,2-Dichloroethene					Blood	7.0E+00		6.0E-01	7.6E+00
			trans-1,2-Dichloroethene					Blood	1.0E-01		8.7E-03	1.1E-01
			Aluminum					Central Nervous System	3.2E-01		2.1E-03	3.2E-01
			Chromium					NOAEL	1.6E+00		8.5E-01	2.5E+00
			Iron					Gastrointestinal	3.0E+00		2.0E-02	3.0E+00
			Manganese					Central Nervous System	7.3E+00		1.2E+00	8.5E+00
			Nickel					Decreased Weight	1.8E-01		6.1E-03	1.9E-01
			Vanadium					Kidney	1.1E+00		2.7E-01	1.3E+00
			Chemical Total						6.8E+01		1.1E+01	7.9E+01
		Exposure Point Total					0.0E+00					7.9E+01
	Exposure Medium Total						0.0E+00					7.9E+01
Medium Total							0.0E+00					7.9E+01
Receptor Total							0.0E+00				Receptor HI Total	7.9E+01

Total Liver HI Across All Media =	5.5E+01
Total Kidney HI Across All Media =	5.6E+01
Total Fetus HI Across All Media =	5.5E+01
Total Blood HI Across All Media =	7.7E+00
Total CNS HI Across All Media =	8.8E+00
Total NOAEL HI Across All Media =	2.5E+00
Total Gastrointestinal HI Across All Media =	3.0E+00
Total Decreased Weight HI Across All Media =	1.9E-01

TABLE 10.3.RME
RISK SUMMARY
REASONABLE MAXIMUM EXPOSURE
Site 49 RFI Report
NSWC - White Oak
Silver Spring, Maryland

Scenario Timeframe: Future
Receptor Population: Resident
Receptor Age: Child/Adult

Medium	Exposure Medium	Exposure Point	Chemical of Potential Concern	Carcinogenic Risk				Non-Carcinogenic Hazard Quotient				
				Ingestion	Inhalation	Dermal	Exposure Routes Total	Primary Target Organ(s)	Ingestion	Inhalation	Dermal	Exposure Routes Total
Groundwater	Groundwater	Bedrock Aquifer - Tap Water	1,2-Dibromoethane	4.2E-02		7.9E-02	1.2E-01					
			Tetrachloroethene	8.9E-06		2.4E-04	2.5E-04					
			Trichloroethene	7.2E-04		5.8E-03	6.5E-03					
			Vinyl chloride	3.3E-04		3.6E-05	3.7E-04					
			Chemical Total	4.3E-02		8.5E-02	1.3E-01					
		Exposure Point Total					1.3E-01					0.0E+00
	Exposure Medium Total						1.3E-01					0.0E+00
Medium Total							1.3E-01					0.0E+00
Receptor Total							1.3E-01				Receptor HI Total	0.0E+00

TABLE 10.4.RME
RISK SUMMARY
REASONABLE MAXIMUM EXPOSURE
Site 49 RFI Report
NSWC - White Oak
Silver Spring, Maryland

Scenario Timeframe: Future
Receptor Population: Construction Worker
Receptor Age: Adult

Medium	Exposure Medium	Exposure Point	Chemical of Potential Concern	Carcinogenic Risk				Non-Carcinogenic Hazard Quotient				
				Ingestion	Inhalation	Dermal	Exposure Routes Total	Primary Target Organ(s)	Ingestion	Inhalation	Dermal	Exposure Routes Total
Groundwater	Groundwater	Bedrock Aquifer - Water in Excavation Pit	1,2-Dibromoethane			9.4E-05	9.4E-05	NA			NA	
			Trichloroethene			1.5E-06	1.5E-06	Liver, Kidney, Fetus			1.5E+00	1.5E+00
			Chromium			NA		NOAEL			8.5E-01	8.5E-01
			Manganese			NA		CNS			6.6E-01	6.6E-01
			Vanadium			NA		Kidney			5.1E-01	5.1E-01
			Chemical Total			9.6E-05	9.6E-05				3.6E+00	3.6E+00
		Exposure Point Total					9.6E-05					3.6E+00
	Exposure Medium Total						9.6E-05					3.6E+00
Medium Total							9.6E-05					3.6E+00
Receptor Total							9.6E-05	Receptor HI Total				3.6E+00

Total CNS HI Across All Media =	6.6E-01
Total NOAEL HI Across All Media =	8.5E-01
Total Liver HI Across All Media =	1.5E+00
Total Kindey HI Across All Media =	1.5E+00
Total Fetus HI Across All Media =	1.5E+00

TABLE 10.1.CT
RISK SUMMARY
CENTRAL TENDENCY
Site 49 RFI Report
NSWC - White Oak
Silver Spring, Maryland

Scenario Timeframe: Future
Receptor Population: Resident
Receptor Age: Child

Medium	Exposure Medium	Exposure Point	Chemical of Potential Concern	Carcinogenic Risk				Non-Carcinogenic Hazard Quotient				
				Ingestion	Inhalation	Dermal	Exposure Routes Total	Primary Target Organ(s)	Ingestion	Inhalation	Dermal	Exposure Routes Total
Groundwater	Groundwater	Bedrock Aquifer - Tap Water	Trichloroethene					Liver, Kidney, Fetus	1.6E+00		1.5E-01	1.8E+00
			cis-1,2-Dichloroethene					Blood	2.0E-01		1.0E-02	2.1E-01
			Manganese					Central Nervous System	3.2E-01		1.7E-02	3.4E-01
			Chemical Total						2.1E+00		1.8E-01	2.3E+00
		Exposure Point Total					0.0E+00					2.3E+00
	Exposure Medium Total						0.0E+00					2.3E+00
Medium Total							0.0E+00					2.3E+00
Receptor Total							0.0E+00				Receptor HI Total	2.3E+00

Total Liver HI Across All Media =	1.8E+00
Total Kidney HI Across All Media =	1.8E+00
Total Blood HI Across All Media =	2.1E-01
Total CNS HI Across All Media =	3.4E-01
Total Fetus HI Across All Media =	1.8E+00

TABLE 10.2.CT
RISK SUMMARY
CENTRAL TENDENCY
Site 49 RFI Report
NSWC - White Oak
Silver Spring, Maryland

Scenario Timeframe: *Future*
Receptor Population: Resident
Receptor Age: Child/Adult

Medium	Exposure Medium	Exposure Point	Chemical of Potential Concern	Carcinogenic Risk				Non-Carcinogenic Hazard Quotient				
				Ingestion	Inhalation	Dermal	Exposure Routes Total	Primary Target Organ(s)	Ingestion	Inhalation	Dermal	Exposure Routes Total
Groundwater	Groundwater	Bedrock Aquifer - Tap Water	1,2-Dibromoethane	6.3E-04		4.3E-04	1.1E-03					
			Tetrachloroethene	3.4E-06		6.5E-05	6.9E-05					
			Trichloroethene	1.3E-05		7.3E-05	8.7E-05					
			Vinyl chloride	9.9E-05		3.8E-06	1.0E-04					
			Chemical Total	7.4E-04		5.7E-04	1.3E-03					
		Exposure Point Total					1.3E-03					0.0E+00
	Exposure Medium Total						1.3E-03					0.0E+00
Medium Total							1.3E-03					0.0E+00
Receptor Total							1.3E-03				Receptor HI Total	0.0E+00

Appendix I
Complete Analytical Data Tables

Table I-1
Complete Data for Sump and Manhole Water
Site 49 RI Report
NSWC - White Oak, Silver Spring, Maryland

Station ID	49MHSWNW		49MHSWSE		49SMPU		49SMPL	
Sample ID	049MHSWNW11		049MHSWSE29		049SMPU1002		049SMPL1002	
Sample Date	10/08/02		10/08/02		10/08/02		10/08/02	
Chemical Name								
Volatile Organic Compounds (UG/L)								
1,1,1-Trichloroethane	0.5	UL	0.5	UL	0.5	UL	0.5	UL
1,1,2,2-Tetrachloroethane	0.5	UL	0.5	UL	0.5	UL	0.5	UL
1,1,2-Trichloro-1,2,2-trifluoroethane(Freon-113)	0.5	UL	0.5	UL	0.5	UL	0.5	UL
1,1,2-Trichloroethane	0.5	UL	0.5	UL	0.5	UL	0.5	UL
1,1-Dichloroethane	0.5	UL	0.5	UL	0.5	UL	0.5	UL
1,1-Dichloroethene	0.5	UL	0.5	UL	0.5	UL	0.5	UL
1,2,3-Trichlorobenzene	0.5	UL	0.5	UL	0.5	UL	0.5	UL
1,2,4-Trichlorobenzene	0.5	UL	0.5	UL	0.5	UL	0.5	UL
1,2-Dibromo-3-chloropropane	0.5	R	0.5	R	0.5	R	0.5	R
1,2-Dibromoethane	0.5	UL	0.5	UL	0.5	UL	0.5	UL
1,2-Dichlorobenzene	0.5	UL	0.5	UL	0.5	UL	0.5	UL
1,2-Dichloroethane	0.5	UL	0.5	UL	0.5	UL	0.5	UL
1,2-Dichloropropane	0.5	UL	0.5	UL	0.5	UL	0.5	UL
1,3-Dichlorobenzene	0.5	UL	0.5	UL	0.5	UL	0.5	UL
1,4-Dichlorobenzene	0.5	UL	0.5	UL	0.5	UL	0.5	UL
2-Butanone	5	R	5	R	5	R	5	R
2-Hexanone	5	UL	5	UL	5	UL	5	UL
4-Methyl-2-pentanone	5	UL	5	UL	5	UL	5	UL
Acetone	5	R	5	R	1.9	B	5	R
Benzene	0.5	UL	0.5	UL	0.5	UL	0.5	UL
Bromochloromethane	0.5	UL	0.5	UL	0.5	UL	0.5	UL
Bromodichloromethane	0.5	UL	0.5	UL	0.5	UL	0.5	UL
Bromoform	0.5	UL	0.5	UL	0.5	UL	0.5	UL
Bromomethane	0.5	UL	0.5	UL	0.5	UL	0.5	UL
Carbon disulfide	0.5	UL	0.5	UL	0.5	UL	0.5	UL
Carbon tetrachloride	0.5	UL	0.5	UL	0.5	UL	0.5	UL
Chlorobenzene	0.5	UL	0.5	UL	0.5	UL	0.5	UL
Chloroethane	0.5	UL	0.5	UL	0.5	UL	0.5	UL
Chloroform	0.5	UL	0.5	UL	0.5	UL	0.5	UL
Chloromethane	0.29	B	0.22	B	0.5	UL	0.5	UL
Cumene	0.5	UL	0.5	UL	0.5	UL	0.5	UL
Cyclohexane	0.5	UL	0.5	UL	0.5	UL	0.5	UL
Dibromochloromethane	0.5	UL	0.5	UL	0.5	UL	0.5	UL

UL - Undetected, limit biased low

NA - Not analyzed
B - Blank contamination
L - Biased low
R - Unusable
U - Undetected

Table I-1
Complete Data for Sump and Manhole Water
Site 49 RI Report
NSWC - White Oak, Silver Spring, Maryland

Station ID	49MHSWNW		49MHSWSE		49SMPU		49SMPL	
Sample ID	049MHSWNW11		049MHSWSE29		049SMPU1002		049SMPL1002	
Sample Date	10/08/02		10/08/02		10/08/02		10/08/02	
Chemical Name								
Dichlorodifluoromethane(Freon-12)	0.5	UL	0.5	UL	0.5	UL	0.5	UL
Ethylbenzene	0.27	L	0.5	UL	0.5	UL	0.5	UL
Methyl acetate	0.5	UL	0.5	UL	0.5	UL	0.5	UL
Methyl-tert-butyl ether (MTBE)	0.5	UL	0.5	UL	0.5	UL	0.5	UL
Methylcyclohexane	0.5	UL	0.5	UL	0.5	UL	0.5	UL
Methylene chloride	0.34	B	0.35	B	0.51	B	0.4	B
Styrene	0.5	UL	0.5	UL	0.5	UL	0.5	UL
Tetrachloroethene	0.25	B	0.5	UL	0.5	UL	0.5	UL
Toluene	0.38	L	0.5	UL	0.5	UL	0.5	UL
Trichloroethene	0.33	L	0.5	UL	0.5	UL	0.5	UL
Trichlorofluoromethane(Freon-11)	0.5	UL	0.5	UL	0.5	UL	0.5	UL
Vinyl chloride	0.5	UL	0.5	UL	0.5	UL	0.5	UL
Xylene, total	0.91	L	0.5	UL	0.5	UL	0.5	UL
cis-1,2-Dichloroethene	0.5	UL	0.5	UL	0.5	UL	0.5	UL
cis-1,3-Dichloropropene	0.5	UL	0.5	UL	0.5	UL	0.5	UL
trans-1,2-Dichloroethene	0.5	U	0.5	UL	0.5	UL	0.5	UL
trans-1,3-Dichloropropene	0.5	U	0.5	UL	0.5	UL	0.5	UL

NA - Not analyzed
B - Blank contamination
L - Biased low
R - Unusable
U - Undetected

UL - Undetected, limit biased low

Table I-2
Complete Data for Soil Samples
Site 49 RI Report
NSWC - White Oak, Silver Spring, Maryland

Station ID	49SB200		49SB201	49SB202			49SB203		
Sample ID	049SU2000901	049SU2001101	049SU2010601	049SU2020601	049SU2021001	049SU2021201	049SU2030401	049SU2030601	049SU2031001
Sample Date	06/17/02	06/17/02	07/09/02	07/10/02	07/10/02	07/10/02	07/09/02	07/09/02	07/09/02
Chemical Name									
Volatile Organic Compounds (UG/KG)									
1,1,1-Trichloroethane	12 U	12 U	13 U	15 U	12 U	13 U	13 U	14 U	14 U
1,1,2,2-Tetrachloroethane	12 U	12 U	13 U	15 U	12 U	13 U	13 U	14 U	14 U
1,1,2-Trichloro-1,2,2-trifluoroethane(Freon-113)	12 U	12 U	13 U	15 U	12 U	13 U	13 U	14 U	14 U
1,1,2-Trichloroethane	12 U	12 U	13 U	15 U	12 U	13 U	13 U	14 U	14 U
1,1-Dichloroethane	12 U	12 U	13 U	15 U	12 U	13 U	13 U	14 U	14 U
1,1-Dichloroethene	12 U	12 U	13 U	15 U	12 U	13 U	13 U	14 U	14 U
1,2,4-Trichlorobenzene	12 U	12 U	13 U	15 U	12 U	13 U	13 U	14 U	14 U
1,2-Dibromo-3-chloropropane	12 U	12 U	13 U	15 U	12 U	13 U	13 U	14 U	14 U
1,2-Dibromoethane	12 U	12 U	13 U	15 U	12 U	13 U	13 U	14 U	14 U
1,2-Dichlorobenzene	12 U	12 U	13 U	15 U	12 U	13 U	13 U	14 U	14 U
1,2-Dichloroethane	12 U	12 U	13 U	15 U	12 U	13 U	13 U	14 U	14 U
1,2-Dichloropropane	12 U	12 U	13 U	15 U	12 U	13 U	13 U	14 U	14 U
1,3-Dichlorobenzene	12 U	12 U	13 U	15 U	12 U	13 U	13 U	14 U	14 U
1,4-Dichlorobenzene	12 U	12 U	13 U	15 U	12 U	13 U	13 U	14 U	14 U
2-Butanone	6.7 JB	12 U	13 U	15 U	12 U	13 U	6 B	4.9 B	14 U
2-Hexanone	12 U	12 U	13 U	15 U	12 U	13 U	13 U	14 U	14 U
4-Methyl-2-pentanone	12 U	12 U	13 U	15 U	12 U	13 U	13 U	14 U	14 U
Acetone	28 B	31 B	25 B	24 B	17 B	17 B	24 B	29 B	21 B
Benzene	12 U	12 U	13 U	15 U	12 U	13 U	13 U	14 U	14 U
Bromodichloromethane	12 U	12 U	13 U	15 U	12 U	13 U	13 U	14 U	14 U
Bromoform	12 U	12 U	13 U	15 U	12 U	13 U	13 U	14 U	14 U
Bromomethane	12 U	1.4 J	13 U	15 U	12 U	13 U	13 U	14 U	14 U
Carbon disulfide	12 U	12 U	13 U	15 U	12 U	13 U	1.7 J	14 U	14 U
Carbon tetrachloride	12 U	12 U	13 U	15 U	12 U	13 U	13 U	14 U	14 U
Chlorobenzene	12 U	12 U	13 U	15 U	12 U	13 U	13 U	14 U	14 U
Chloroethane	12 U	12 U	13 U	15 U	12 U	13 U	13 U	14 U	14 U
Chloroform	12 U	12 U	13 U	15 U	12 U	13 U	13 U	14 U	14 U
Chloromethane	12 U	2.6 J	3.4 J	15 U	12 U	13 U	2.7 J	3 J	4.2 J
Cumene	12 U	12 U	13 U	15 U	12 U	13 U	13 U	14 U	14 U
Cyclohexane	12 U	12 U	13 U	15 U	12 U	13 U	13 U	14 U	14 U
Dibromochloromethane	12 U	12 U	13 U	15 U	12 U	13 U	13 U	14 U	14 U
Dichlorodifluoromethane(Freon-12)	12 U	12 U	13 U	15 U	12 U	13 U	13 U	14 U	14 U
Ethylbenzene	12 U	12 U	13 U	15 U	12 U	13 U	13 U	14 U	14 U

NA - Not analyzed
B - Blank contamination
J - Estimated
JB
K - Biased high

L - Biased low
R - Unusable
U - Undetected
UL - Undetected, limit biased low

Table I-2
Complete Data for Soil Samples
Site 49 RI Report
NSWC - White Oak, Silver Spring, Maryland

Station ID	49SB200		49SB201	49SB202			49SB203		
Sample ID	049SU2000901	049SU2001101	049SU2010601	049SU2020601	049SU2021001	049SU2021201	049SU2030401	049SU2030601	049SU2031001
Sample Date	06/17/02	06/17/02	07/09/02	07/10/02	07/10/02	07/10/02	07/09/02	07/09/02	07/09/02
Chemical Name									
Methyl acetate	12 U	12 U	13 U	15 U	12 U	13 U	13 U	14 U	14 U
Methyl-tert-butyl ether (MTBE)	12 U	12 U	13 U	15 U	12 U	13 U	13 U	14 U	14 U
Methylcyclohexane	12 U	12 U	13 U	15 U	12 U	13 U	13 U	14 U	14 U
Methylene chloride	7.6 JB	7.8 JB	11 B	11 B	9.4 B	11 B	12 B	12 B	12 B
Styrene	12 U	12 U	13 U	15 U	12 U	13 U	13 U	14 U	14 U
Tetrachloroethene	12 U	12 U	1.9 J	2.1 J	1.5 J	1.6 J	3 J	2.1 J	2.5 J
Toluene	12 U	12 U	13 U	15 U	12 U	13 U	13 U	14 U	14 U
Trichloroethene	12 U	12 U	13 U	15 U	12 U	13 U	13 U	14 U	14 U
Trichlorofluoromethane(Freon-11)	12 U	12 U	13 U	15 U	12 U	13 U	13 U	14 U	14 U
Vinyl chloride	12 U	12 U	13 U	15 U	12 U	13 U	13 U	14 U	14 U
Xylene, total	12 U	12 U	13 U	15 U	12 U	13 U	13 U	14 U	14 U
cis-1,2-Dichloroethene	12 U	12 U	13 U	15 U	12 U	13 U	13 U	14 U	14 U
cis-1,3-Dichloropropene	12 U	12 U	13 U	15 U	12 U	13 U	13 U	14 U	14 U
trans-1,2-Dichloroethene	12 U	12 U	13 U	15 U	12 U	13 U	13 U	14 U	14 U
trans-1,3-Dichloropropene	12 U	12 U	13 U	15 U	12 U	13 U	13 U	14 U	14 U
Semivolatile Organic Compounds (UG/KG)									
1,1-Biphenyl	NA	NA	370 U	360 U	350 U	360 U	380 U	370 U	360 U
2,2'-Oxybis(1-chloropropane)	NA	NA	370 U	360 U	350 U	360 U	380 U	370 U	360 U
2,4,5-Trichlorophenol	NA	NA	920 U	910 U	890 U	900 U	950 U	920 U	900 U
2,4,6-Trichlorophenol	NA	NA	370 U	360 U	350 U	360 U	380 U	370 U	360 U
2,4-Dichlorophenol	NA	NA	370 U	360 U	350 U	360 U	380 U	370 U	360 U
2,4-Dimethylphenol	NA	NA	370 U	360 U	350 U	360 U	380 U	370 U	360 U
2,4-Dinitrophenol	NA	NA	920 U	910 U	890 U	900 U	950 U	920 U	900 U
2,4-Dinitrotoluene	NA	NA	370 R	360 R	350 R	360 R	380 R	370 R	360 R
2,6-Dinitrotoluene	NA	NA	370 R	360 R	350 R	360 R	380 R	370 R	360 R
2-Chloronaphthalene	NA	NA	370 U	360 U	350 U	360 U	380 U	370 U	360 U
2-Chlorophenol	NA	NA	370 U	360 U	350 U	360 U	380 U	370 U	360 U
2-Methylnaphthalene	NA	NA	370 U	360 U	350 U	360 U	380 U	370 U	360 U
2-Methylphenol	NA	NA	370 U	360 U	350 U	360 U	380 U	370 U	360 U
2-Nitroaniline	NA	NA	920 U	910 U	890 U	900 U	950 U	920 U	900 U
2-Nitrophenol	NA	NA	370 U	360 U	350 U	360 U	380 U	370 U	360 U
3,3'-Dichlorobenzidine	NA	NA	370 U	360 U	350 U	360 U	380 U	370 U	360 U
3-Nitroaniline	NA	NA	920 U	910 U	890 U	900 U	950 U	920 U	900 U
4,6-Dinitro-2-methylphenol	NA	NA	920 U	910 U	890 U	900 U	950 U	920 U	900 U

NA - Not analyzed
B - Blank contamination
J - Estimated
JB
K - Bias

L - Biased low
R - Unusable
U - Undetected
UL - Undetected. limit biased low

Table I-2
Complete Data for Soil Samples
Site 49 RI Report
NSWC - White Oak, Silver Spring, Maryland

Station ID	49SB200		49SB201	49SB202			49SB203		
Sample ID	049SU2000901	049SU2001101	049SU2010601	049SU2020601	049SU2021001	049SU2021201	049SU2030401	049SU2030601	049SU2031001
Sample Date	06/17/02	06/17/02	07/09/02	07/10/02	07/10/02	07/10/02	07/09/02	07/09/02	07/09/02
Chemical Name									
4-Bromophenyl-phenylether	NA	NA	370 U	360 U	350 U	360 U	380 U	370 U	360 U
4-Chloro-3-methylphenol	NA	NA	370 U	360 U	350 U	360 U	380 U	370 U	360 U
4-Chloroaniline	NA	NA	370 U	360 U	350 U	360 U	380 U	370 U	360 U
4-Chlorophenyl-phenylether	NA	NA	370 U	360 U	350 U	360 U	380 U	370 U	360 U
4-Methylphenol	NA	NA	370 U	360 U	350 U	360 U	380 U	370 U	360 U
4-Nitroaniline	NA	NA	920 U	910 U	890 U	900 U	950 U	920 U	900 U
4-Nitrophenol	NA	NA	920 U	910 U	890 U	900 U	950 U	920 U	900 U
Acenaphthene	NA	NA	140	9.5	3.5 U	3.6 U	3.8 U	3.7 U	3.6 U
Acenaphthylene	NA	NA	15 U	3.6 U	3.5 U	3.6 U	3.8 U	3.7 U	3.6 U
Acetophenone	NA	NA	370 U	360 U	350 U	360 U	380 U	370 U	360 U
Anthracene	NA	NA	360	12	3.5 U	3.6 U	3.8 U	3.7 U	3.6 U
Atrazine	NA	NA	370 U	360 U	350 U	360 U	380 U	370 U	360 U
Benzaldehyde	NA	NA	370 U	360 U	350 U	360 U	380 U	370 U	360 U
Benzo(a)anthracene	NA	NA	700	32	3.5 U	3.6 U	51	5.2	3.6 U
Benzo(a)pyrene	NA	NA	590	24	3.5 U	3.6 U	45	4.1	3.6 U
Benzo(b)fluoranthene	NA	NA	730	35	3.5 U	3.6 U	67	7	3.6 U
Benzo(g,h,i)perylene	NA	NA	320 J	11	3.5 U	3.6 U	24	3.7 U	3.6 U
Benzo(k)fluoranthene	NA	NA	310	13	3.5 U	3.6 U	21	4.8	3.6 U
Butylbenzylphthalate	NA	NA	370 U	360 U	350 U	360 U	380 U	370 U	360 U
Caprolactam	NA	NA	370 U	360 U	350 U	360 U	380 U	370 U	360 U
Carbazole	NA	NA	370 U	360 U	350 U	360 U	380 U	370 U	360 U
Chrysene	NA	NA	620	32	3.5 U	3.6 U	46	4.8	3.6 U
Di-n-butylphthalate	NA	NA	72 J	360 U	350 U	360 U	380 U	370 U	360 U
Di-n-octylphthalate	NA	NA	370 U	360 U	350 U	360 U	380 U	370 U	360 U
Dibenz(a,h)anthracene	NA	NA	15 U	3.6 U	3.5 U	3.6 U	3.8 U	3.7 U	3.6 U
Dibenzofuran	NA	NA	370 U	360 U	350 U	360 U	380 U	370 U	360 U
Diethylphthalate	NA	NA	370 U	360 U	350 U	360 U	380 U	370 U	360 U
Dimethyl phthalate	NA	NA	370 U	360 U	350 U	360 U	380 U	370 U	360 U
Fluoranthene	NA	NA	1,500	84 L	3.5 U	3.6 U	76	8.8	3.6 U
Fluorene	NA	NA	130	11	3.5 U	3.6 U	3.8 U	3.7 U	3.6 U
Hexachlorobenzene	NA	NA	370 U	360 U	350 U	360 U	380 U	370 U	360 U
Hexachlorobutadiene	NA	NA	370 U	360 U	350 U	360 U	380 U	370 U	360 U
Hexachlorocyclopentadiene	NA	NA	370 U	360 U	350 U	360 U	380 U	370 U	360 U
Hexachloroethane	NA	NA	370 U	360 U	350 U	360 U	380 U	370 U	360 U
Indeno(1,2,3-cd)pyrene	NA	NA	280 J	11	3.5 U	3.6 U	23	3.7 U	3.6 U

NA - Not analyzed
B - Blank contamination
J - Estimated
JB
K - Biased high

L - Biased low
R - Unusable
U - Undetected
UL - Undetected, limit biased low

Table I-2
Complete Data for Soil Samples
Site 49 RI Report
NSWC - White Oak, Silver Spring, Maryland

Station ID	49SB200		49SB201	49SB202			49SB203		
Sample ID	049SU2000901	049SU2001101	049SU2010601	049SU2020601	049SU2021001	049SU2021201	049SU2030401	049SU2030601	049SU2031001
Sample Date	06/17/02	06/17/02	07/09/02	07/10/02	07/10/02	07/10/02	07/09/02	07/09/02	07/09/02
Chemical Name									
Isophorone	NA	NA	370 U	360 U	350 U	360 U	380 U	370 U	360 U
Naphthalene	NA	NA	75	3.6 U	3.5 U	3.6 U	3.8 U	3.7 U	3.6 U
Nitrobenzene	NA	NA	370 R	360 R	350 R	360 R	380 R	370 R	360 R
Pentachlorophenol	NA	NA	920 U	910 U	890 U	900 U	950 U	920 U	900 U
Phenanthrene	NA	NA	1,300	81	3.5 U	3.6 U	16	3.7 U	3.6 U
Phenol	NA	NA	370 U	360 U	350 U	360 U	380 U	370 U	360 U
Pyrene	NA	NA	1,300	68	3.5 U	3.6 U	67	7.4	3.6 U
bis(2-Chloroethoxy)methane	NA	NA	370 U	360 U	350 U	360 U	380 U	370 U	360 U
bis(2-Chloroethyl)ether	NA	NA	370 U	360 U	350 U	360 U	380 U	370 U	360 U
bis(2-Ethylhexyl)phthalate	NA	NA	430	520	230 J	720	2,200	580	330 J
n-Nitroso-di-n-propylamine	NA	NA	370 U	360 U	350 U	360 U	380 U	370 U	360 U
n-Nitrosodiphenylamine	NA	NA	370 U	360 U	350 U	360 U	380 U	370 U	360 U
Pesticide/Polychlorinated Biphenyls (UG/KG)									
4,4'-DDD	NA	NA	3.7 U	3.6 U	3.5 U	3.6 U	3.8 U	3.7 U	3.6 U
4,4'-DDE	NA	NA	3.7 U	3.6 U	3.5 U	3.6 U	3.8 U	3.7 U	3.6 U
4,4'-DDT	NA	NA	2.4 J	3.6 U	3.5 U	3.6 U	3.8 U	3.7 U	3.6 U
Aldrin	NA	NA	1.8 U	1.8 U	1.8 U	1.8 U	1.9 U	1.8 U	1.8 U
Aroclor-1016	NA	NA	37 U	36 U	35 U	36 U	38 U	37 U	36 U
Aroclor-1221	NA	NA	74 U	73 U	71 U	72 U	76 U	74 U	72 U
Aroclor-1232	NA	NA	37 U	36 U	35 U	36 U	38 U	37 U	36 U
Aroclor-1242	NA	NA	37 U	36 U	35 U	36 U	38 U	37 U	36 U
Aroclor-1248	NA	NA	37 U	36 U	35 U	36 U	38 U	37 U	36 U
Aroclor-1254	NA	NA	37 U	36 U	35 U	36 U	38 U	37 U	36 U
Aroclor-1260	NA	NA	37 U	36 U	35 U	36 U	38 U	37 U	36 U
Dieldrin	NA	NA	6.6 J	3.6 U	3.5 U	3.6 U	3.8 U	3.7 U	3.6 U
Endosulfan I	NA	NA	1.8 U	1.8 U	1.8 U	1.8 U	1.9 U	1.8 U	1.8 U
Endosulfan II	NA	NA	3.7 U	3.6 U	3.5 U	3.6 U	3.8 U	3.7 U	3.6 U
Endosulfan sulfate	NA	NA	3.7 U	3.6 U	3.5 U	3.6 U	3.8 U	3.7 U	3.6 U
Endrin	NA	NA	3.7 U	3.6 U	3.5 U	3.6 U	3.8 U	3.7 U	3.6 U
Endrin aldehyde	NA	NA	3.7 U	3.6 U	3.5 U	3.6 U	3.8 U	3.7 U	3.6 U
Endrin ketone	NA	NA	3.7 U	3.6 U	3.5 U	3.6 U	3.8 U	3.7 U	3.6 U
Heptachlor	NA	NA	1.8 U	1.8 U	1.8 U	1.8 U	1.9 U	1.8 U	1.8 U
Heptachlor epoxide	NA	NA	1.8 U	1.8 U	1.8 U	1.8 U	1.9 U	1.8 U	1.8 U
Methoxychlor	NA	NA	18 U	18 U	18 U	18 U	19 U	18 U	18 U

NA - Not analyzed
B - Blank contamination
J - Estimated
JB
K - Bias

L - Biased low
R - Unusable
U - Undetected
UL - Undetected, limit biased low

Table I-2
Complete Data for Soil Samples
Site 49 RI Report
NSWC - White Oak, Silver Spring, Maryland

Station ID	49SB200		49SB201	49SB202			49SB203		
Sample ID	049SU2000901	049SU2001101	049SU2010601	049SU2020601	049SU2021001	049SU2021201	049SU2030401	049SU2030601	049SU2031001
Sample Date	06/17/02	06/17/02	07/09/02	07/10/02	07/10/02	07/10/02	07/09/02	07/09/02	07/09/02
Chemical Name									
Toxaphene	NA	NA	180 U	180 U	180 U	180 U	190 U	180 U	180 U
alpha-BHC	NA	NA	1.8 U	1.8 U	1.8 U	1.8 U	1.9 U	1.8 U	1.8 U
alpha-Chlordane	NA	NA	1.8 U	1.8 U	1.8 U	1.8 U	1.9 U	1.8 U	1.8 U
beta-BHC	NA	NA	1.8 U	1.8 U	1.8 U	1.8 U	1.9 U	1.8 U	1.8 U
delta-BHC	NA	NA	1.8 U	1.8 U	1.8 U	1.8 U	1.9 U	1.8 U	1.8 U
gamma-BHC (Lindane)	NA	NA	1.8 U	1.8 U	1.8 U	1.8 U	1.9 U	1.8 U	1.8 U
gamma-Chlordane	NA	NA	1.8 U	1.8 U	1.8 U	1.8 U	1.9 U	1.8 U	1.8 U
Explosives (UG/KG)									
1,3,5-Trinitrobenzene	NA	NA	100 U	100 U	100 U	100 U	100 U	100 U	100 U
1,3-Dinitrobenzene	NA	NA	100 U	100 U	100 U	100 U	100 U	100 U	100 U
2,4,6-Trinitrotoluene	NA	NA	100 U	100 U	100 U	100 U	100 U	100 U	100 U
2,4-Dinitrotoluene	NA	NA	100 U	100 U	100 U	100 U	100 U	100 U	100 U
2,6-Dinitrotoluene	NA	NA	100 U	100 U	100 U	100 U	100 U	100 U	100 U
2-Amino-4,6-dinitrotoluene	NA	NA	100 U	100 U	100 U	100 U	100 U	100 U	100 U
2-Nitrotoluene	NA	NA	200 U	200 U	200 U	200 U	200 U	200 U	200 U
3-Nitrotoluene	NA	NA	200 U	200 U	200 U	200 U	200 U	200 U	200 U
4-Amino-2,6-dinitrotoluene	NA	NA	100 U	100 U	100 U	100 U	100 U	100 U	100 U
4-Nitrotoluene	NA	NA	200 U	200 U	200 U	200 U	200 U	200 U	200 U
HMX	NA	NA	200 U	200 U	200 U	200 U	200 U	200 U	200 U
Nitrobenzene	NA	NA	100 U	100 U	100 U	100 U	100 U	100 U	100 U
RDX	NA	NA	200 U	200 U	200 U	200 U	200 U	200 U	200 U
Tetryl	NA	NA	200 U	200 U	200 U	200 U	200 U	200 U	200 U
Total Metals (MG/KG)									
Aluminum	NA	NA	16,500	38,000	27,600	23,600	17,800	21,900	29,300
Antimony	NA	NA	0.3 R	0.58 R	0.29 R	0.28 R	0.31 R	0.3 R	0.29 R
Arsenic	NA	NA	6.7	2.3 J	0.9 J	1.4 K	2.7	1.9 K	0.75 J
Barium	NA	NA	91.8	174	117	108	69.8	101	166
Beryllium	NA	NA	0.69	3.4	2.2	2.1	0.96	1.7	2
Cadmium	NA	NA	0.41 J	0.31 B	0.33 J	0.45 J	0.2 J	0.33 J	0.47 J
Calcium	NA	NA	3,000	461 J	133 J	190 J	455 J	295 J	210 J
Chromium	NA	NA	34.8 J	28.3 J	22.7 J	21.1 J	21.4 J	24.3 J	32.1 J
Cobalt	NA	NA	4.1 J	24.9 J	9.8 J	14.4 J	11.3	20.1	15.5
Copper	NA	NA	16.8	38.1	37.7	35.3	25.9	47.1	16.1

NA - Not analyzed
B - Blank contamination
J - Estimated
JB
K - Biased high

L - Biased low
R - Unusable
U - Undetected
UL - Undetected, limit biased low

Table I-2
Complete Data for Soil Samples
Site 49 RI Report
NSWC - White Oak, Silver Spring, Maryland

Station ID	49SB200		49SB201	49SB202			49SB203		
Sample ID	049SU2000901	049SU2001101	049SU2010601	049SU2020601	049SU2021001	049SU2021201	049SU2030401	049SU2030601	049SU2031001
Sample Date	06/17/02	06/17/02	07/09/02	07/10/02	07/10/02	07/10/02	07/09/02	07/09/02	07/09/02
Chemical Name									
Cyanide	NA	NA	0.19 U	0.15 U	0.14 U	0.15 U	0.16 U	0.17 U	0.17 U
Iron	NA	NA	37,400	35,600	30,900	37,000	22,500	30,600	32,000
Lead	NA	NA	20.5 K	15 K	8.7 K	8.4 K	9.3 K	10.4 K	9.7 K
Magnesium	NA	NA	1,230	7,650	5,490	4,870	2,770	5,210	8,900
Manganese	NA	NA	176	2,090	336	741	362	720	310
Mercury	NA	NA	0.05	0.02 J	0.02 U	0.02 U	0.03 J	0.02 J	0.02 U
Nickel	NA	NA	7.2 K	34.7 K	23.7 K	26.3 K	15.8 K	24.2 K	30.9 K
Potassium	NA	NA	891	7,510	4,780	4,350	2,230	4,430	7,350
Selenium	NA	NA	1.1 B	0.75 UL	0.5 B	0.47 B	1.6 B	0.73 B	0.37 UL
Silver	NA	NA	0.17 U	0.33 U	0.16 U	0.16 U	0.17 U	0.17 U	0.16 U
Sodium	NA	NA	35.6 U	93.9 J	33.6 U	33 U	78.7 B	87.6 B	91.8 B
Thallium	NA	NA	0.55 UL	1.1 U	0.52 U	0.51 U	0.56 U	0.54 UL	0.52 UL
Vanadium	NA	NA	43.9	46.4	31.2	30.6	31.8	35.9	45.4
Zinc	NA	NA	31.2 K	99	76.1	73.8	42.7	72.9 K	94.5 K
Wet Chemistry (MG/KG)									
% Solids	93	93	90	92	94	93	88	90	93
Carbon	NA	NA	5,700	2,000	1,400	840	15,000	10,000	2,600
pH	NA	NA	7.6	4.8	4.5	4.6	5	4	6.3

NA - Not analyzed
B - Blank contamination
J - Estimated
JB
K - Bias [illegible]

L - Biased low
R - Unusable
U - Undetected
UL - Undetected, limit biased low

Table I-3
Complete Data for Direct-Push Groundwater Samples
Site 49 RI Report
NSWC - White Oak, Silver Spring, Maryland

Station ID	49DP301		49DP302		49DP303		49DP304		49DP305		49DP306		49DP307		49DP308	
Sample ID	049DP30102		049DP30203		049DP30302		049DP30402		049DP30503		049DP30602		049DP30702		049DP30802	
Sample Date	11/20/02		11/20/02		11/20/02		11/20/02		11/22/02		11/22/02		11/22/02		11/22/02	
Chemical Name																
Volatile Organic Compounds (UG/L)																
1,1,1-Trichloroethane	0.5	U	0.5	U	0.5	U	0.5	U	0.5	U	0.5	U	0.5	U	0.5	U
1,1,2,2-Tetrachloroethane	0.5	U	0.5	U	0.5	U	0.5	U	0.5	U	0.5	U	0.5	U	0.5	U
1,1,2-Trichloro-1,2,2-trifluoroethane(Freon-113)	0.5	U	0.5	U	0.5	U	0.5	U	0.5	U	0.5	U	0.5	U	0.5	U
1,1,2-Trichloroethane	0.5	U	0.5	U	0.5	U	0.5	U	0.5	U	0.5	U	0.5	U	0.5	U
1,1-Dichloroethane	0.5	U	0.5	U	0.5	U	0.5	U	0.5	U	0.5	U	0.29	J	0.5	U
1,1-Dichloroethene	0.5	U	0.5	U	0.5	U	0.5	U	0.5	U	0.5	U	0.5	U	0.5	U
1,2,3-Trichlorobenzene	0.5	U	0.5	U	0.5	U	0.5	U	0.5	U	0.5	U	0.5	U	0.5	U
1,2,4-Trichlorobenzene	0.5	U	0.5	U	0.5	U	0.5	U	0.5	U	0.5	U	0.5	U	0.5	U
1,2-Dibromo-3-chloropropane	0.5	U	0.5	U	0.5	U	0.5	U	0.5	U	0.5	U	0.5	U	0.5	U
1,2-Dibromoethane	0.5	U	0.5	U	0.5	U	0.5	U	0.5	U	0.5	U	0.5	U	0.5	U
1,2-Dichlorobenzene	0.5	U	0.5	U	0.5	U	0.5	U	0.5	U	0.5	U	0.5	U	0.5	U
1,2-Dichloroethane	0.5	U	0.5	U	0.5	U	0.5	U	0.5	U	0.5	U	0.5	U	0.5	U
1,2-Dichloropropane	0.5	U	0.5	U	0.5	U	0.5	U	0.5	U	0.5	U	0.5	U	0.5	U
1,3-Dichlorobenzene	0.5	U	0.5	U	0.5	U	0.5	U	0.5	U	0.5	U	0.5	U	0.5	U
1,4-Dichlorobenzene	0.5	U	0.5	U	0.5	U	0.5	U	0.5	U	0.5	U	0.5	U	0.5	U
2-Butanone	5	U	5	U	5	U	5	U	5	U	5	U	5	U	5	U
2-Hexanone	5	U	5	U	5	U	5	U	5	U	5	U	5	U	5	U
4-Methyl-2-pentanone	5	U	5	U	5	U	5	U	5	U	5	U	5	U	5	U
Acetone	7.7	B	9.2	B	5	U	4	B	20	B	4.8	B	9.2	B	6.7	B
Benzene	0.5	U	0.5	U	0.5	U	0.5	U	0.5	U	0.5	U	0.5	U	0.5	U
Bromochloromethane	0.5	U	0.5	U	0.5	U	0.5	U	0.5	U	0.5	U	0.5	U	0.5	U
Bromodichloromethane	0.5	U	0.5	U	0.5	U	0.5	U	0.5	U	0.5	U	0.5	U	0.5	U
Bromoform	0.5	U	0.5	U	0.5	U	0.5	U	0.5	U	0.5	U	0.5	U	0.5	U
Bromomethane	0.5	U	0.5	U	0.5	U	0.5	U	0.5	U	0.5	U	0.5	U	0.5	U
Carbon disulfide	0.5	U	0.5	U	0.99		0.5	U	1.1		1.2		0.5	U	0.38	J
Carbon tetrachloride	0.5	U	0.5	U	0.5	U	0.5	U	0.5	U	0.5	U	0.5	U	0.5	U
Chlorobenzene	0.5	U	0.5	U	0.5	U	0.5	U	0.5	U	0.5	U	0.5	U	0.5	U
Chloroethane	0.5	U	0.5	U	0.5	U	0.5	U	0.5	U	0.5	U	0.5	U	0.5	U
Chloroform	0.5	U	0.5	U	0.5	U	0.5	U	0.5	U	0.5	U	0.5	U	0.5	U
Chloromethane	0.5	U	0.5	U	0.5	U	0.5	U	0.5	J	0.5	U	0.32	J	0.5	U
Cumene	0.5	U	0.5	U	0.5	U	0.5	U	0.5	U	0.5	U	0.5	U	0.5	U
Cyclohexane	0.5	U	0.5	U	0.5	U	0.5	U	0.5	U	0.5	U	0.5	U	0.5	U
Dibromochloromethane	0.5	U	0.5	U	0.5	U	0.5	U	0.5	U	0.5	U	0.5	U	0.5	U

NA - Not analyzed
B - Blank contamination
J - Estimated
UJ - Undetected, estimated limit
U - Undetected

Table I-3
Complete Data for Direct-Push Groundwater Samples
Site 49 RI Report
NSWC - White Oak, Silver Spring, Maryland

Station ID	49DP301		49DP302		49DP303		49DP304		49DP305		49DP306		49DP307		49DP308	
Sample ID	049DP30102		049DP30203		049DP30302		049DP30402		049DP30503		049DP30602		049DP30702		049DP30802	
Sample Date	11/20/02		11/20/02		11/20/02		11/20/02		11/22/02		11/22/02		11/22/02		11/22/02	
Chemical Name																
Dichlorodifluoromethane(Freon-12)	0.5	U	0.5	U	0.5	U	0.5	U	0.5	U	0.5	U	0.5	U	0.5	U
Ethylbenzene	0.5	U	0.5	U	0.5	U	0.5	U	0.5	U	0.5	U	0.5	U	0.5	U
Methyl acetate	0.5	U	0.5	U	0.5	U	0.5	U	0.5	U	0.5	U	0.5	U	0.5	U
Methyl-tert-butyl ether (MTBE)	0.5	U	0.5	U	0.5	U	0.5	U	0.5	U	0.5	U	0.5	U	0.5	U
Methylcyclohexane	0.5	U	0.5	U	0.5	U	0.5	U	0.5	U	0.5	U	0.5	U	0.5	U
Methylene chloride	2	B	1.6	B	1.5	B	1.5	B	1.4	B	1.3	B	1.5	B	1.1	B
Styrene	0.5	U	0.5	U	0.5	U	0.5	U	0.5	U	0.5	U	0.5	U	0.5	U
Tetrachloroethene	0.5	U	0.5	U	0.5	U	0.5	U	0.5	U	0.5	U	0.5	U	0.5	U
Toluene	0.5	U	0.5	U	0.5	U	0.5	U	0.5	U	0.5	U	0.5	U	0.5	U
Trichloroethene	0.5	U	0.5	U	0.5	U	0.76		0.37	J	1.3		1.1		1.2	
Trichlorofluoromethane(Freon-11)	0.5	U	0.5	U	0.5	U	0.5	U	0.5	U	0.5	U	0.5	U	0.5	U
Vinyl chloride	0.5	U	0.5	U	0.5	U	0.5	U	0.5	U	0.79		0.5	U	0.5	U
Xylene, total	0.5	U	0.5	U	0.5	U	0.5	U	0.5	U	0.5	U	0.5	U	0.5	U
cis-1,2-Dichloroethene	0.5	U	0.5	U	0.5	U	0.5	U	0.5	U	3.1		0.63		0.24	J
cis-1,3-Dichloropropene	0.5	U	0.5	U	0.5	U	0.5	U	0.5	U	0.5	U	0.5	U	0.5	U
trans-1,2-Dichloroethene	0.5	U	0.5	U	0.5	U	0.5	U	0.5	U	0.5	U	0.5	U	0.5	U
trans-1,3-Dichloropropene	0.5	U	0.5	U	0.5	U	0.5	U	0.5	U	0.5	U	0.5	U	0.5	U

NA - Not analyzed
B - Blank contamination
J - Estimated
UJ - Undetected, estimated limit
U - Und

Table I-4
Complete Data for Groundwater Samples from Temporary Wells
Site 49 RI Report
NSWC - White Oak, Silver Spring, Maryland

Station ID	400DP002		400DP003		400DP004		400DP01		49DP205		49DP206		49DP207		49DP209		49DP210	
Sample ID	400DP002-82		400DP003-53		400DP004-48		400DP01-25		049DP20562		049DP20636		049DP20763		049DP20946		049DP21032	
Sample Date	11/07/01		11/07/01		11/08/01		08/21/01		06/27/02		07/01/02		06/30/02		06/30/02		07/02/02	
Chemical Name																		
Volatile Organic Compounds (UG/L)																		
1,1,1-Trichloroethane	1	U	1	U	1	U	1	U	0.5	UJ	0.5	UJ	0.5	UJ	0.5	UJ	0.5	UJ
1,1,2,2-Tetrachloroethane	1	U	1	U	1	U	1	U	0.5	UJ	0.5	UJ	0.5	UJ	0.5	UJ	0.5	UJ
1,1,2-Trichloro-1,2,2-trifluoroethane(Freon-113)	NA		NA		NA		NA		0.5	UJ	0.5	UJ	0.5	UJ	0.5	UJ	0.5	UJ
1,1,2-Trichloroethane	1	U	1	U	1	U	1	U	0.5	UJ	0.5	UJ	0.5	UJ	0.5	UJ	0.5	UJ
1,1-Dichloroethane	0.6	J	1	U	1	U	1	U	0.5	UJ	0.5	UJ	0.5	UJ	0.86	J	0.5	UJ
1,1-Dichloroethene	1		1	U	1	U	1	U	0.5	UJ	0.21	J	0.5	UJ	4.2	J	0.5	UJ
1,2,3-Trichlorobenzene	NA		NA		NA		NA		0.5	UJ	0.5	UJ	0.5	UJ	0.5	UJ	0.5	UJ
1,2,4-Trichlorobenzene	1	U	1	U	1	U	1	U	0.5	UJ	0.5	UJ	0.5	UJ	0.5	UJ	0.5	UJ
1,2-Dibromo-3-chloropropane	1	U	1	U	1	U	1	U	0.5	UJ	0.5	UJ	0.5	UJ	0.5	UJ	0.5	UJ
1,2-Dibromoethane	1	U	1	U	1	U	1	U	0.5	UJ	0.5	UJ	0.5	UJ	0.5	UJ	0.5	UJ
1,2-Dichlorobenzene	1	U	1	U	1	U	1	U	0.5	UJ	0.5	UJ	0.5	UJ	0.5	UJ	0.5	UJ
1,2-Dichloroethane	1	U	1	U	1	U	1	U	0.5	UJ	0.5	UJ	0.5	UJ	0.5	UJ	0.5	UJ
1,2-Dichloropropane	1	U	1	U	1	U	1	U	0.5	UJ	0.5	UJ	0.5	UJ	0.5	UJ	0.5	UJ
1,3-Dichlorobenzene	1	U	1	U	1	U	1	U	0.5	UJ	0.5	UJ	0.5	UJ	0.5	UJ	0.5	UJ
1,4-Dichlorobenzene	1	U	1	U	1	U	1	U	0.5	UJ	0.5	UJ	0.5	UJ	0.5	UJ	0.5	UJ
2-Butanone	5	U	5	U	5	U	5	U	5	UJ	5	UJ	5	UJ	5	UJ	5	UJ
2-Hexanone	5	U	5	U	5	U	5	U	5	UJ	5	UJ	5	UJ	5	UJ	5	UJ
4-Methyl-2-pentanone	5	U	5	U	5	U	5	U	5	UJ	5	UJ	5	UJ	5	UJ	5	UJ
Acetone	5	U	20		6		1.22	J	1.9	B	13	B	4.1	B	5	UJ	2.9	B
Benzene	1	U	1	U	1	U	1	U	0.5	UJ	0.5	UJ	0.5	UJ	0.5	UJ	0.5	UJ
Bromochloromethane	1	U	1	U	1	U	1	U	0.5	UJ	0.5	UJ	0.5	UJ	0.5	UJ	0.5	UJ
Bromodichloromethane	1	U	1	U	1	U	1	U	0.5	UJ	0.5	UJ	0.5	UJ	0.5	UJ	0.5	UJ
Bromoform	1	U	1	U	1	U	1	U	0.5	UJ	0.5	UJ	0.5	UJ	0.5	UJ	0.5	UJ
Bromomethane	1	U	1	U	1	U	1	U	0.5	UJ	0.5	UJ	0.5	UJ	0.5	UJ	0.5	UJ
Carbon disulfide	1	U	1	U	1	U	1	U	0.5	UJ	0.21	J	0.5	UJ	0.5	UJ	0.5	UJ
Carbon tetrachloride	1	U	1	U	1	U	1	U	0.5	UJ	0.5	UJ	0.5	UJ	0.5	UJ	0.5	UJ
Chlorobenzene	1	U	1	U	1	U	1	U	0.5	UJ	0.5	UJ	0.5	UJ	0.5	UJ	0.5	UJ
Chloroethane	1	U	1	U	1	U	1	U	0.5	UJ	0.5	UJ	0.5	UJ	0.5	UJ	0.5	UJ
Chloroform	1	U	1	U	10		2.62		0.5	UJ	0.38	J	0.92	J	0.66	J	1.8	J
Chloromethane	1	U	1	U	1	U	1	U	0.5	UJ	0.5	UJ	0.5	UJ	0.5	UJ	0.5	UJ
Cumene	NA		NA		NA		NA		0.5	UJ	0.5	UJ	0.5	UJ	0.5	UJ	0.5	UJ
Cyclohexane	NA		NA		NA		NA		0.5	UJ	0.5	UJ	0.5	UJ	0.5	UJ	0.5	UJ
Dibromochloromethane	1	U	1	U	1	U	1	U	0.5	UJ	0.5	UJ	0.5	UJ	0.5	UJ	0.5	UJ

NA - Not analyzed
B - Blank contamination
J - Estimated
UJ - Undetected, estimated limit
U - Undetected

Table I-4
Complete Data for Groundwater Samples from Temporary Wells
Site 49 RI Report
NSWC - White Oak, Silver Spring, Maryland

Station ID	400DP002		400DP003		400DP004		400DP01		49DP205		49DP206		49DP207		49DP209		49DP210	
Sample ID	400DP002-82		400DP003-53		400DP004-48		400DP01-25		049DP20562		049DP20636		049DP20763		049DP20946		049DP21032	
Sample Date	11/07/01		11/07/01		11/08/01		08/21/01		06/27/02		07/01/02		06/30/02		06/30/02		07/02/02	
Chemical Name																		
Dichlorodifluoromethane(Freon-12)	NA		NA		NA		NA		0.5	UJ	0.5	UJ	0.5	UJ	0.5	UJ	0.5	UJ
Ethylbenzene	1	U	1	U	1	U	1	U	0.5	UJ	0.5	UJ	0.5	UJ	0.5	UJ	0.5	UJ
Methyl acetate	NA		NA		NA		NA		0.5	UJ	0.5	UJ	0.5	UJ	0.5	UJ	0.5	UJ
Methyl-tert-butyl ether (MTBE)	NA		NA		NA		NA		0.5	UJ	0.5	UJ	0.5	UJ	0.5	UJ	0.5	UJ
Methylcyclohexane	NA		NA		NA		NA		0.5	UJ	0.5	UJ	0.5	UJ	0.5	UJ	0.5	UJ
Methylene chloride	1	B	1	B	1	B	0.79	JB	0.99	B	1.9	B	1.7	B	1.5	B	0.63	B
Styrene	1	U	1	U	1	U	1	U	0.5	UJ	0.5	UJ	0.5	UJ	0.5	UJ	0.5	UJ
Tetrachloroethene	1	U	1	U	1	U	1	U	0.5	UJ	0.5	UJ	0.5	UJ	0.5	UJ	0.5	UJ
Toluene	1	U	1	U	1	U	1	U	0.5	UJ	0.63	J	0.45	J	0.66	J	0.34	J
Trichloroethene	1,000		5		1	U	1.6		17	J	17	J	67	J	1,600	J	44	J
Trichlorofluoromethane(Freon-11)	NA		NA		NA		NA		0.5	UJ	0.5	UJ	0.5	UJ	0.5	UJ	0.5	UJ
Vinyl chloride	2		1	U	1	U	1	U	0.5	UJ	0.5	UJ	0.5	UJ	1.7	J	0.5	UJ
Xylene, total	1	U	1	U	1	U	1	U	0.5	UJ	0.5	UJ	0.5	UJ	0.5	UJ	0.5	UJ
cis-1,2-Dichloroethene	200		1		1	U	1	U	4.3	J	6.3	J	16	J	360	J	6.9	J
cis-1,3-Dichloropropene	1	U	1	U	1	U	1	U	0.5	UJ	0.5	UJ	0.5	UJ	0.5	UJ	0.5	UJ
trans-1,2-Dichloroethene	30	J	1	U	1	U	1	U	0.5	UJ	0.29	J	0.5	UJ	17	J	0.5	UJ
trans-1,3-Dichloropropene	1	U	1	U	1	U	1	U	0.5	UJ	0.5	UJ	0.5	UJ	0.5	UJ	0.5	UJ

NA - Not analyzed
B - Blank contamination
J - Estimated
UJ - Unde[illegible]ted, estimated limit
U - Und[illegible]

Table I-5
Complete Data of Monitoring Well Samples
Site 49 RI Report
NSWC - White Oak, Silver Spring, Maryland

Station ID	49GW200		49GW201D		49GW201DD	49GW201S		
Sample ID	049GW2000001	049GW2000002	049GW201D001	049GW201D002	049GW201DD001	049GW201S001	049GW201S002	049GW201S9902
Sample Date	08/02/02	10/10/02	08/02/02	10/10/02	02/10/03	08/02/02	10/10/02	10/10/02
Chemical Name								
Volatile Organic Compounds (UG/L)								
1,1,1-Trichloroethane	50 UJ	0.5 U	50 UJ	0.5 U	10 U	5 UJ	0.5 U	0.5 U
1,1,2,2-Tetrachloroethane	50 UJ	0.5 U	50 UJ	0.5 U	10 U	5 UJ	0.5 U	0.5 U
1,1,2-Trichloro-1,2,2-trifluoroethane(Freon-113)	50 UJ	0.5 U	50 UJ	0.5 U	10 U	5 UJ	0.5 U	0.5 U
1,1,2-Trichloroethane	50 UJ	0.5 U	50 UJ	0.5 U	10 U	5 UJ	0.5 U	0.5 U
1,1-Dichloroethane	50 UJ	1.1	50 UJ	1.9 K	10 U	5 UJ	0.5 U	0.5 U
1,1-Dichloroethene	50 UJ	2.1	50 UJ	11 K	10 U	5 UJ	1.1	0.99
1,2,3-Trichlorobenzene	50 UJ	0.5 U	50 UJ	0.5 U	NA	5 UJ	0.5 U	0.5 U
1,2,4-Trichlorobenzene	50 UJ	0.5 U	50 UJ	0.5 U	10 U	5 UJ	0.5 U	0.5 U
1,2-Dibromo-3-chloropropane	50 UJ	0.5 R	50 UJ	130 R	10 U	5 UJ	0.5 R	25 R
1,2-Dibromoethane	65 J	0.5 U	50 UJ	0.5 U	10 U	5 UJ	0.5 U	0.5 U
1,2-Dichlorobenzene	50 UJ	0.5 U	50 UJ	0.5 U	10 U	5 UJ	0.5 U	0.5 U
1,2-Dichloroethane	50 UJ	0.5 U	50 UJ	0.5 U	10 U	5 UJ	0.5 U	0.5 U
1,2-Dichloropropane	50 UJ	0.5 U	50 UJ	0.5 U	10 U	5 UJ	0.5 U	0.5 U
1,3-Dichlorobenzene	50 UJ	0.5 U	50 UJ	0.5 U	10 U	5 UJ	0.5 U	0.5 U
1,4-Dichlorobenzene	50 UJ	0.5 U	50 UJ	0.5 U	10 U	5 UJ	0.5 U	0.5 U
2-Butanone	500 R	250 R	1,000 R	5 R	10 U	50 R	250 R	250 R
2-Hexanone	500 UJ	5 U	500 UJ	5 U	10 U	50 UJ	5 U	5 U
4-Methyl-2-pentanone	500 UJ	5 U	500 UJ	5 U	10 U	50 UJ	5 U	5 U
Acetone	500 R	5 R	500 R	1,300 R	13 B	260 R	5 R	49 B
Benzene	50 UJ	0.5 U	50 UJ	0.5 U	10 U	5 UJ	0.5 U	0.5 U
Bromochloromethane	50 UJ	0.5 U	50 UJ	0.5 U	NA	5 UJ	0.5 U	0.5 U
Bromodichloromethane	50 UJ	0.5 U	50 UJ	0.5 U	10 U	5 UJ	0.5 U	0.5 U
Bromoform	50 UJ	0.5 U	50 UJ	0.5 U	10 U	5 UJ	0.5 U	0.5 U
Bromomethane	50 UJ	0.5 U	50 UJ	0.26 K	10 U	5 UJ	0.5 U	0.5 U
Carbon disulfide	50 UJ	1.2 B	50 UJ	0.5 U	10 U	5 UJ	0.91 B	3.4 B
Carbon tetrachloride	50 UJ	0.5 U	50 UJ	0.5 U	10 U	5 UJ	0.5 U	0.5 U
Chlorobenzene	50 UJ	0.5 U	50 UJ	0.5 U	10 U	5 UJ	0.5 U	0.5 U
Chloroethane	50 UJ	0.5 U	50 UJ	0.5 U	10 U	5 UJ	0.5 U	0.5 U
Chloroform	50 UJ	0.5 U	50 UJ	0.5 U	2.6 J	5 UJ	0.5 U	0.5 U
Chloromethane	50 UJ	0.28 B	50 UJ	2 B	10 U	5 UJ	0.5 U	0.5 U
Cumene	50 UJ	0.5 U	50 UJ	0.5 U	10 U	5 UJ	0.5 U	0.5 U
Cyclohexane	50 UJ	0.5 U	50 UJ	0.5 U	10 U	5 UJ	0.5 U	0.5 U
Dibromochloromethane	50 UJ	0.5 U	50 UJ	0.5 U	10 U	5 UJ	0.5 U	0.5 U

NA - Not analyzed
B - Analyte not detected above associated blank
J - Reported value is estimated
K - Reported value may be biased high
L - Reported value may be biased low

R - Unreliable result
U - Analyte not detected
UJ
UL

Table I-5
Complete Data of Monitoring Well Samples
Site 49 RI Report
NSWC - White Oak, Silver Spring, Maryland

Station ID	49GW200		49GW201D		49GW201DD	49GW201S		
Sample ID	049GW2000001	049GW2000002	049GW201D001	049GW201D002	049GW201DD001	049GW201S001	049GW201S002	049GW201S9902
Sample Date	08/02/02	10/10/02	08/02/02	10/10/02	02/10/03	08/02/02	10/10/02	10/10/02
Chemical Name								
Dichlorodifluoromethane(Freon-12)	50 UJ	0.5 U	50 UJ	0.5 U	10 U	5 UJ	0.5 U	0.5 U
Ethane	29 U	NA	29 U	NA	NA	5.8 U	NA	NA
Ethene	31 U	NA	31 U	NA	NA	6.2 U	NA	NA
Ethylbenzene	50 UJ	0.5 U	50 UJ	0.5 U	10 U	5 UJ	0.5 U	0.5 U
Methane	73 J	NA	61 J	NA	NA	27 J	NA	NA
Methyl acetate	50 UJ	0.5 U	50 UJ	0.5 U	10 U	5 UJ	0.5 U	0.5 U
Methyl-tert-butyl ether (MTBE)	50 UJ	0.5 U	50 UJ	0.5 U	10 U	5 UJ	0.5 U	0.5 U
Methylcyclohexane	50 UJ	0.5 U	50 UJ	0.5 U	10 U	5 UJ	0.5 U	0.5 U
Methylene chloride	70 B	0.47 B	56 B	0.52 B	10 U	7.1 B	0.36 B	0.32 B
Styrene	41 J	0.5 U	50 UJ	0.5 U	10 U	5 UJ	0.5 U	0.5 U
Tetrachloroethene	50 UJ	0.5 U	50 UJ	0.5 U	10 U	5 UJ	0.5 U	0.5 U
Toluene	50 UJ	0.5 U	50 UJ	0.5 U	1.8 J	5 UJ	0.5 U	0.5 U
Trichloroethene	690 J	760 J	3,300	4,400	6.5 J	730 J	380 L	310 J
Trichlorofluoromethane(Freon-11)	50 UJ	0.5 U	50 UJ	0.5 U	10 U	5 UJ	0.5 U	0.5 U
Vinyl chloride	50 UJ	0.96	50 UJ	5.7 K	10 U	5 UJ	0.59	0.57
Xylene, total	50 UJ	0.5 U	50 UJ	0.5 U	10 U	5 UJ	0.5 U	0.5 U
cis-1,2-Dichloroethene	130 J	140 J	600 J	1,100	1.3 J	150 J	100 L	110 J
cis-1,3-Dichloropropene	50 UJ	0.5 U	50 UJ	0.5 U	10 U	5 UJ	0.5 U	0.5 U
trans-1,2-Dichloroethene	20 J	29	31 J	46 K	10 U	6.9 J	4.8	4.4
trans-1,3-Dichloropropene	50 UJ	0.5 U	50 UJ	0.5 U	10 U	5 UJ	0.5 U	0.5 U
Semi-volatile Organic Compounds (UG/L)								
1,1-Biphenyl	5.3 U	NA	5.3 U	NA	NA	5.3 U	NA	NA
1,2,4,5-Tetrachlorobenzene	5.3 U	NA	5.3 U	NA	NA	5.3 U	NA	NA
2,4,5-Trichlorophenol	21 U	NA	21 U	NA	NA	21 U	NA	NA
2,4,6-Trichlorophenol	5.3 U	NA	5.3 U	NA	NA	5.3 U	NA	NA
2,4-Dichlorophenol	5.3 U	NA	5.3 U	NA	NA	5.3 U	NA	NA
2,4-Dimethylphenol	5.3 U	NA	5.3 U	NA	NA	5.3 U	NA	NA
2,4-Dinitrophenol	21 U	NA	21 U	NA	NA	21 U	NA	NA
2,4-Dinitrotoluene	5.3 U	NA	5.3 U	NA	NA	5.3 U	NA	NA
2,6-Dinitrotoluene	5.3 R	NA	5.3 R	NA	NA	5.3 R	NA	NA
2-Chloronaphthalene	5.3 U	NA	5.3 U	NA	NA	5.3 U	NA	NA
2-Chlorophenol	5.3 U	NA	5.3 U	NA	NA	5.3 U	NA	NA
2-Methylnaphthalene	5.3 U	NA	5.3 U	NA	NA	5.3 U	NA	NA
2-Methylphenol	5.3 U	NA	5.3 U	NA	NA	5.3 U	NA	NA

NA - Not analyzed
B - Analyte not detected above associated blank
J - Reported value is estimated
K - Reported value may be biased high
L - Repo[illegible]lue may be biased low

R - Unreliable result
U - Analyte not detected
UJ
UL

Table I-5
Complete Data of Monitoring Well Samples
Site 49 RI Report
NSWC - White Oak, Silver Spring, Maryland

Station ID	49GW200		49GW201D		49GW201DD	49GW201S		
Sample ID	049GW2000001	049GW2000002	049GW201D001	049GW201D002	049GW201DD001	049GW201S001	049GW201S002	049GW201S9902
Sample Date	08/02/02	10/10/02	08/02/02	10/10/02	02/10/03	08/02/02	10/10/02	10/10/02
Chemical Name								
2-Nitroaniline	21 U	NA	21 U	NA	NA	21 U	NA	NA
2-Nitrophenol	5.3 U	NA	5.3 U	NA	NA	5.3 U	NA	NA
3,3'-Dichlorobenzidine	5.3 U	NA	5.3 U	NA	NA	5.3 U	NA	NA
3-Nitroaniline	21 U	NA	21 U	NA	NA	21 U	NA	NA
4,6-Dinitro-2-methylphenol	21 U	NA	21 U	NA	NA	21 U	NA	NA
4-Bromophenyl-phenylether	5.3 U	NA	5.3 U	NA	NA	5.3 U	NA	NA
4-Chloro-3-methylphenol	5.3 U	NA	5.3 U	NA	NA	5.3 U	NA	NA
4-Chloroaniline	5.3 U	NA	5.3 U	NA	NA	5.3 U	NA	NA
4-Chlorophenyl-phenylether	5.3 U	NA	5.3 U	NA	NA	5.3 U	NA	NA
4-Methylphenol	5.3 U	NA	5.3 U	NA	NA	5.3 U	NA	NA
4-Nitroaniline	21 U	NA	21 U	NA	NA	21 U	NA	NA
4-Nitrophenol	21 U	NA	21 U	NA	NA	21 U	NA	NA
Acenaphthene	5.3 U	NA	5.3 U	NA	NA	5.3 U	NA	NA
Acenaphthylene	5.3 U	NA	5.3 U	NA	NA	5.3 U	NA	NA
Acetophenone	5.3 U	NA	5.3 U	NA	NA	5.3 U	NA	NA
Anthracene	5.3 U	NA	5.3 U	NA	NA	5.3 U	NA	NA
Atrazine	5.3 U	NA	5.3 U	NA	NA	5.3 U	NA	NA
Benzaldehyde	5.3 U	NA	5.3 U	NA	NA	5.3 U	NA	NA
Benzo(a)anthracene	5.3 U	NA	5.3 U	NA	NA	5.3 U	NA	NA
Benzo(a)pyrene	5.3 U	NA	5.3 U	NA	NA	5.3 U	NA	NA
Benzo(b)fluoranthene	5.3 U	NA	5.3 U	NA	NA	5.3 U	NA	NA
Benzo(g,h,i)perylene	5.3 U	NA	5.3 U	NA	NA	5.3 U	NA	NA
Benzo(k)fluoranthene	5.3 U	NA	5.3 U	NA	NA	5.3 U	NA	NA
Bis(2-chloro-1-methylethyl) ether	5.3 U	NA	5.3 U	NA	NA	5.3 U	NA	NA
Butylbenzylphthalate	5.3 U	NA	5.3 U	NA	NA	5.3 U	NA	NA
Caprolactam	5.3 U	NA	5.3 U	NA	NA	5.3 U	NA	NA
Chrysene	5.3 U	NA	5.3 U	NA	NA	5.3 U	NA	NA
Di-n-butylphthalate	5.3 U	NA	5.3 U	NA	NA	5.3 U	NA	NA
Di-n-octylphthalate	5.3 U	NA	5.3 U	NA	NA	5.3 U	NA	NA
Dibenz(a,h)anthracene	5.3 U	NA	5.3 U	NA	NA	5.3 U	NA	NA
Dibenzofuran	5.3 U	NA	5.3 U	NA	NA	5.3 U	NA	NA
Diethylphthalate	5.3 U	NA	5.3 U	NA	NA	5.3 U	NA	NA
Dimethyl phthalate	7.1	NA	5.3 U	NA	NA	5.3 U	NA	NA
Fluoranthene	5.3 U	NA	5.3 U	NA	NA	5.3 U	NA	NA
Fluorene	5.3 U	NA	5.3 U	NA	NA	5.3 U	NA	NA

NA - Not analyzed
B - Analyte not detected above associated blank
J - Reported value is estimated
K - Reported value may be biased high
L - Reported value may be biased low

R - Unreliable result
U - Analyte not detected
UJ
UL

Table I-5
Complete Data of Monitoring Well Samples
Site 49 RI Report
NSWC - White Oak, Silver Spring, Maryland

Station ID	49GW200		49GW201D		49GW201DD	49GW201S		
Sample ID	049GW2000001	049GW2000002	049GW201D001	049GW201D002	049GW201DD001	049GW201S001	049GW201S002	049GW201S9902
Sample Date	08/02/02	10/10/02	08/02/02	10/10/02	02/10/03	08/02/02	10/10/02	10/10/02
Chemical Name								
Hexachlorobenzene	5.3 U	NA	5.3 U	NA	NA	5.3 U	NA	NA
Hexachlorobutadiene	5.3 U	NA	5.3 U	NA	NA	5.3 U	NA	NA
Hexachlorocyclopentadiene	5.3 U	NA	5.3 U	NA	NA	5.3 U	NA	NA
Hexachloroethane	5.3 U	NA	5.3 U	NA	NA	5.3 U	NA	NA
Indeno(1,2,3-cd)pyrene	5.3 U	NA	5.3 U	NA	NA	5.3 U	NA	NA
Isophorone	5.3 U	NA	5.3 U	NA	NA	5.3 U	NA	NA
Naphthalene	5.3 U	NA	5.3 U	NA	NA	5.3 U	NA	NA
Nitrobenzene	5.3 R	NA	5.3 R	NA	NA	5.3 R	NA	NA
Pentachlorophenol	5.3 U	NA	5.3 U	NA	NA	5.3 U	NA	NA
Phenanthrene	5.3 U	NA	5.3 U	NA	NA	5.3 U	NA	NA
Phenol	5.3 U	NA	5.3 U	NA	NA	5.3 U	NA	NA
Pyrene	5.3 U	NA	5.3 U	NA	NA	5.3 U	NA	NA
bis(2-Chloroethoxy)methane	5.3 U	NA	5.3 U	NA	NA	5.3 U	NA	NA
bis(2-Chloroethyl)ether	5.3 U	NA	5.3 U	NA	NA	5.3 U	NA	NA
bis(2-Ethylhexyl)phthalate	1.1 B	NA	5.3 U	NA	NA	5.3 U	NA	NA
n-Nitroso-di-n-propylamine	5.3 U	NA	5.3 U	NA	NA	5.3 U	NA	NA
n-Nitrosodiphenylamine	5.3 U	NA	5.3 U	NA	NA	5.3 U	NA	NA
Explosives (UG/L)								
1,3,5-Trinitrobenzene	0.26 U	NA	0.26 U	NA	NA	0.26 U	NA	NA
1,3-Dinitrobenzene	0.26 U	NA	0.26 U	NA	NA	0.26 U	NA	NA
2,4,6-Trinitrotoluene	0.26 U	NA	0.26 U	NA	NA	0.26 U	NA	NA
2,4-Dinitrotoluene	0.26 R	NA	0.26 R	NA	NA	0.26 R	NA	NA
2,6-Dinitrotoluene	0.26 U	NA	0.26 U	NA	NA	0.26 U	NA	NA
2-Amino-4,6-dinitrotoluene	0.26 U	NA	0.26 U	NA	NA	0.26 U	NA	NA
2-Nitrotoluene	0.52 U	NA	0.52 U	NA	NA	0.52 U	NA	NA
3-Nitrotoluene	0.52 U	NA	0.52 U	NA	NA	0.52 U	NA	NA
4-Amino-2,6-dinitrotoluene	0.26 U	NA	0.26 U	NA	NA	0.26 U	NA	NA
4-Nitrotoluene	0.52 U	NA	0.52 U	NA	NA	0.52 U	NA	NA
HMX	0.52 U	NA	0.52 U	NA	NA	0.52 U	NA	NA
Nitrobenzene	0.26 U	NA	0.26 U	NA	NA	0.26 U	NA	NA
Perchlorate	4 U	NA	4 U	NA	NA	4 U	NA	NA
RDX	0.52 U	NA	0.52 U	NA	NA	0.52 U	NA	NA
Tetryl	0.52 U	NA	0.52 U	NA	NA	0.52 U	NA	NA

NA - Not analyzed
B - Analyte not detected above associated blank
J - Reported value is estimated
K - Reported value may be biased high
L - Reported value may be biased low

R - Unreliable result
U - Analyte not detected
UJ
UI

Table I-5
Complete Data of Monitoring Well Samples
Site 49 RI Report
NSWC - White Oak, Silver Spring, Maryland

Station ID	49GW200		49GW201D		49GW201DD	49GW201S		
Sample ID	049GW2000001	049GW2000002	049GW201D001	049GW201D002	049GW201DD001	049GW201S001	049GW201S002	049GW201S9902
Sample Date	08/02/02	10/10/02	08/02/02	10/10/02	02/10/03	08/02/02	10/10/02	10/10/02
Chemical Name								
Total Metals (UG/L)								
Aluminum	956	NA	783	NA	120 B	528	NA	NA
Ammonia	NA	NA	NA	NA	NA	NA	NA	NA
Antimony	3.9 U	NA	3.9 U	NA	1.7 U	3.9 U	NA	NA
Arsenic	2.8 U	NA	2.8 U	NA	2.3 U	2.8 U	NA	NA
Barium	113 J	NA	102 J	NA	27.2 J	26.6 J	NA	NA
Beryllium	0.1 U	NA	0.14 J	NA	0.1 U	0.1 U	NA	NA
Cadmium	0.46 J	NA	0.21 J	NA	0.3 U	0.2 U	NA	NA
Calcium	54,700	NA	25,700	NA	8,510 K	17,000	NA	NA
Chromium	15.9	NA	15.5	NA	2.1 B	12.7	NA	NA
Cobalt	1.5 J	NA	0.71 J	NA	0.5 U	1.4 J	NA	NA
Copper	4.7 B	NA	3 B	NA	3.5 B	4.2 B	NA	NA
Cyanide	10 U	NA	10 U	NA	10 U	10 U	NA	NA
Iron	1,680	NA	4,250	NA	46.1 B	778	NA	NA
Lead	1.6 U	NA	1.6 U	NA	1 UL	1.6 U	NA	NA
Magnesium	14,600	NA	9,530	NA	4,150 J	7,150	NA	NA
Manganese	253	NA	426	NA	9.1 J	30.8	NA	NA
Mercury	0.1 U	NA	0.1 U	NA	0.1 U	0.1 U	NA	NA
Nickel	18.1 J	NA	11.3 J	NA	1.5 B	10.8 J	NA	NA
Potassium	9,820	NA	5,020	NA	12,300	3,320 J	NA	NA
Selenium	2.5 U	NA	2.5 U	NA	1.6 U	3.1 B	NA	NA
Silver	0.8 U	NA	0.8 U	NA	0.4 U	0.8 U	NA	NA
Sodium	14,900	NA	11,300	NA	45,400 K	13,400	NA	NA
Thallium	4 U	NA	4 U	NA	3.1 U	4 U	NA	NA
Vanadium	1.4 J	NA	0.93 J	NA	1.8 B	0.9 J	NA	NA
Zinc	17.9 J	NA	12.3 J	NA	4.4 B	17.3 J	NA	NA
Dissolved Metals (UG/L)								
Aluminum	23.1 U	NA	23.1 U	NA	49 B	46 J	NA	NA
Antimony	3.9 U	NA	3.9 U	NA	1.7 U	3.9 U	NA	NA
Arsenic	2.8 U	NA	2.8 U	NA	2.3 U	2.8 U	NA	NA
Barium	101 J	NA	91.7 J	NA	38.3 J	24.8 J	NA	NA
Beryllium	0.1 U	NA	0.1 U	NA	0.1 U	0.1 U	NA	NA
Cadmium	0.35 J	NA	0.24 J	NA	0.3 U	0.35 J	NA	NA
Calcium	54,300	NA	25,200	NA	14,100 K	17,000	NA	NA

NA - Not analyzed
B - Analyte not detected above associated blank
J - Reported value is estimated
K - Reported value may be biased high
L - Reported value may be biased low

R - Unreliable result
U - Analyte not detected
UJ
UL

Table I-5
Complete Data of Monitoring Well Samples
Site 49 RI Report
NSWC - White Oak, Silver Spring, Maryland

Station ID	49GW200		49GW201D		49GW201DD	49GW201S		
Sample ID	049GW2000001	049GW2000002	049GW201D001	049GW201D002	049GW201DD001	049GW201S001	049GW201S002	049GW201S9902
Sample Date	08/02/02	10/10/02	08/02/02	10/10/02	02/10/03	08/02/02	10/10/02	10/10/02
Chemical Name								
Chromium	0.5 U	NA	0.5 U	NA	1.4 B	0.74 J	NA	NA
Cobalt	0.57 J	NA	0.68 J	NA	0.5 U	0.5 U	NA	NA
Copper	1.4 B	NA	0.7 U	NA	0.5 U	3.2 B	NA	NA
Cyanide	NA	NA	NA	NA	10 U	NA	NA	NA
Iron	49 J	NA	2,670	NA	20.6 B	42.7 J	NA	NA
Lead	1.6 U	NA	1.6 U	NA	1 UL	1.6 U	NA	NA
Magnesium	13,800	NA	9,370	NA	4,430 J	6,960	NA	NA
Manganese	213	NA	408	NA	23.6	17.1	NA	NA
Mercury	0.1 U	NA	0.1 U	NA	0.1 U	0.1 U	NA	NA
Nickel	2.8 J	NA	2.9 J	NA	2.6 B	4.3 J	NA	NA
Potassium	9,620	NA	4,840 J	NA	8,210	3,360 J	NA	NA
Selenium	2.5 U	NA	2.5 U	NA	1.6 U	4 B	NA	NA
Silver	0.8 U	NA	0.8 U	NA	0.51 B	0.8 U	NA	NA
Sodium	14,600	NA	11,800	NA	43,000 K	13,500	NA	NA
Thallium	4 U	NA	4 U	NA	3.1 U	4 U	NA	NA
Vanadium	0.8 U	NA	0.8 U	NA	0.99 B	0.8 U	NA	NA
Zinc	14 J	NA	8.6 J	NA	4.9 B	32.1	NA	NA
Wet Chemistry (MG/L)								
Alkalinity	150	NA	80	NA	140	39	NA	NA
Ammonia	NA	NA	NA	NA	0.1 U	NA	NA	NA
Chloride	31	NA	35	NA	4.8	25	NA	NA
Nitrate	0.31 J	NA	0.19 J	NA	0.1 UL	0.57 J	NA	NA
Nitrogen	0.16	NA	0.1 U	NA	0.1 U	0.1 U	NA	NA
Orthophosphate	0.1 UJ	NA	0.1 UJ	NA	NA	0.1 UJ	NA	NA
Phosphorus	NA	NA	NA	NA	NA	NA	NA	NA
Sulfate	16	NA	3.8	NA	8.4	8.4	NA	NA

NA - Not analyzed
B - Analyte not detected above associated blank
J - Reported value is estimated
K - Reported value may be biased high
L - Reported value may be biased low

R - Unreliable result
U - Analyte not detected
UJ
UL

Table I-5
Complete Data of Monitoring Well Samples
Site 49 RI Report
NSWC - White Oak, Silver Spring, Maryland

Station ID	49GW202D		49GW202S						49GW203				49GW204			
Sample ID	049GW202D001		049GW2020001		049GW2029901		049GW2020002		049GW2030001		049GW2030002		049GW2040001		049GW2040002	
Sample Date	02/11/03		08/01/02		08/01/02		10/09/02		08/02/02		10/09/02		08/01/02		10/09/02	
Chemical Name																
Volatile Organic Compounds (UG/L)																
1,1,1-Trichloroethane	1.2	J	0.5	UJ	0.5	UJ	0.5	U	0.5	UJ	0.5	UJ	0.5	UJ	0.5	UJ
1,1,2,2-Tetrachloroethane	10	U	0.5	UJ	0.5	UJ	0.5	U	0.5	UJ	0.5	UJ	0.5	UJ	0.5	UJ
1,1,2-Trichloro-1,2,2-trifluoroethane(Freon-113)	10	U	0.5	UJ	0.5	UJ	0.5	U	0.5	UJ	0.5	UJ	0.5	UJ	0.5	UJ
1,1,2-Trichloroethane	10	U	0.5	UJ	0.5	UJ	0.5	U	0.5	UJ	0.5	UJ	0.5	UJ	0.5	UJ
1,1-Dichloroethane	10	U	0.5	UJ	0.5	UJ	0.5	U	0.5	UJ	0.5	UJ	0.5	UJ	0.5	UJ
1,1-Dichloroethene	10	U	0.5	UJ	0.5	UJ	0.5	U	0.21	J	0.27	J	0.5	UJ	0.5	UJ
1,2,3-Trichlorobenzene	NA		0.5	UJ	0.5	UJ	0.5	U	0.5	UJ	0.5	UJ	0.5	UJ	0.5	UJ
1,2,4-Trichlorobenzene	10	U	0.5	UJ	0.5	UJ	0.5	U	0.5	UJ	0.5	UJ	0.5	UJ	0.5	UJ
1,2-Dibromo-3-chloropropane	10	U	0.5	UJ	0.5	UJ	0.5	R	0.5	UJ	0.5	R	0.5	UJ	0.5	R
1,2-Dibromoethane	10	U	0.5	UJ	0.5	UJ	0.5	U	0.5	UJ	0.5	UJ	0.5	UJ	0.5	UJ
1,2-Dichlorobenzene	10	U	0.5	UJ	0.5	UJ	0.5	U	0.5	UJ	0.5	UJ	0.5	UJ	0.5	UJ
1,2-Dichloroethane	10	U	0.5	UJ	0.5	UJ	0.5	U	0.5	UJ	0.5	UJ	0.5	UJ	0.5	UJ
1,2-Dichloropropane	10	U	0.5	UJ	0.5	UJ	0.5	U	0.5	UJ	0.5	UJ	0.5	UJ	0.83	J
1,3-Dichlorobenzene	10	U	0.5	UJ	0.5	UJ	0.5	U	0.5	UJ	0.5	UJ	0.5	UJ	0.5	UJ
1,4-Dichlorobenzene	10	U	0.5	UJ	0.5	UJ	0.5	U	0.5	UJ	0.5	UJ	0.5	UJ	0.5	UJ
2-Butanone	10	U	5	R	5	R	5	R	5	R	5	R	5	R	5	R
2-Hexanone	10	U	5	UJ	5	UJ	5	U	5	UJ	5	UJ	5	UJ	5	UJ
4-Methyl-2-pentanone	10	U	5	UJ	5	UJ	5	U	5	UJ	5	UJ	5	UJ	5	UJ
Acetone	10	U	2.3	J	2.7	J	1.3	B	5	R	5	R	3	J	5	R
Benzene	10	U	0.5	UJ	0.5	UJ	0.5	U	0.5	UJ	0.5	UJ	0.5	UJ	0.5	UJ
Bromochloromethane	NA		0.5	UJ	0.5	UJ	0.5	U	0.5	UJ	0.5	UJ	0.5	UJ	0.5	UJ
Bromodichloromethane	10	U	0.5	UJ	0.5	UJ	0.5	U	0.5	UJ	0.5	UJ	0.5	UJ	0.5	UJ
Bromoform	10	U	0.5	UJ	0.23	J	0.5	U	0.5	UJ	0.5	UJ	0.5	UJ	0.5	UJ
Bromomethane	10	U	0.5	UJ	0.5	UJ	0.5	U	0.5	UJ	0.5	UJ	0.5	UJ	0.5	UJ
Carbon disulfide	10	U	0.76	B	0.71	B	0.65	B	0.5	UJ	0.27	B	0.5	UJ	0.5	UJ
Carbon tetrachloride	10	U	0.5	UJ	0.5	UJ	0.5	U	0.5	UJ	0.5	UJ	0.5	UJ	0.5	UJ
Chlorobenzene	10	U	0.5	UJ	0.5	UJ	0.5	U	0.5	UJ	0.5	UJ	0.5	UJ	0.5	UJ
Chloroethane	10	U	0.5	UJ	0.5	UJ	0.5	U	0.5	UJ	0.5	UJ	0.5	UJ	0.5	UJ
Chloroform	10	U	2.7	J	2.8	J	2.1	B	0.5	UJ	0.5	UJ	11	J	8.9	J
Chloromethane	10	U	0.5	UJ	0.5	UJ	0.5	U	0.5	UJ	0.5	UJ	0.5	UJ	0.5	UJ
Cumene	10	U	0.5	UJ	0.5	UJ	0.5	U	0.5	UJ	0.5	UJ	0.5	UJ	0.5	UJ
Cyclohexane	10	U	0.88	J	0.7	J	0.5	U	0.5	UJ	0.5	UJ	0.5	UJ	0.5	UJ
Dibromochloromethane	10	U	0.5	UJ	0.5	UJ	0.5	U	0.5	UJ	0.5	UJ	0.5	UJ	0.5	UJ

NA - Not analyzed
B - Analyte not detected above associated blank
J - Reported value is estimated
K - Reported value may be biased high
L - Reported value may be biased low

R - Unreliable result
U - Analyte not detected
UJ
UL

Table I-5
Complete Data of Monitoring Well Samples
Site 49 RI Report
NSWC - White Oak, Silver Spring, Maryland

Station ID	49GW202D		49GW202S				49GW203				49GW204			
Sample ID	049GW202D001		049GW2020001		049GW2029901		049GW2020002		049GW2030001		049GW2030002		049GW2040001		049GW2040002	
Sample Date	02/11/03		08/01/02		08/01/02		10/09/02		08/02/02		10/09/02		08/01/02		10/09/02	
Chemical Name																
Dichlorodifluoromethane(Freon-12)	10	U	0.5	UJ	0.5	UJ	0.5	U	0.5	UJ	0.5	UJ	0.5	UJ	0.5	UJ
Ethane	NA		5.8	U	5.8	U	NA		5.8	U	NA		5.8	U	NA	
Ethene	NA		6.2	U	6.2	U	NA		6.2	U	NA		6.2	U	NA	
Ethylbenzene	10	U	0.5	UJ	0.5	UJ	0.5	U	0.5	UJ	0.5	UJ	0.5	UJ	0.5	UJ
Methane	NA		3.5	J	4.1	J	NA		100	J	NA		3.6	J	NA	
Methyl acetate	10	U	0.5	UJ	0.5	UJ	0.5	U	0.5	UJ	0.5	UJ	0.5	UJ	0.5	UJ
Methyl-tert-butyl ether (MTBE)	10	U	0.5	UJ	0.5	UJ	0.5	U	0.5	UJ	0.5	UJ	0.5	UJ	0.5	UJ
Methylcyclohexane	10	U	0.5	UJ	0.5	UJ	0.5	U	0.5	UJ	0.5	UJ	0.5	UJ	0.5	UJ
Methylene chloride	10	U	0.35	B	0.4	B	0.36	B	0.64	B	0.35	B	0.38	B	0.47	B
Styrene	10	U	0.5	UJ	0.5	UJ	0.5	U	0.5	UJ	0.5	UJ	0.5	UJ	0.5	UJ
Tetrachloroethene	10	U	0.48	J	0.45	J	0.5	U	0.5	UJ	0.23	B	0.5	UJ	0.5	UJ
Toluene	10	U	0.5	UJ	0.5	UJ	0.5	U	0.5	UJ	0.5	UJ	0.5	UJ	0.5	UJ
Trichloroethene	22		37	J	32	J	60		140		120		0.5	UJ	0.27	B
Trichlorofluoromethane(Freon-11)	10	U	0.5	UJ	0.5	UJ	0.5	U	0.5	UJ	0.5	UJ	0.5	UJ	0.5	UJ
Vinyl chloride	10	U	0.5	UJ	0.5	UJ	0.5	U	0.5	UJ	0.5	UJ	0.5	UJ	0.5	UJ
Xylene, total	10	U	0.5	UJ	0.5	UJ	0.5	U	0.5	UJ	0.5	UJ	0.5	UJ	0.5	UJ
cis-1,2-Dichloroethene	3	J	5.2	J	5.3	J	7.9		15	J	18	J	0.5	UJ	0.5	UJ
cis-1,3-Dichloropropene	10	U	0.5	UJ	0.5	UJ	0.5	U	0.5	UJ	0.5	UJ	0.5	UJ	0.5	UJ
trans-1,2-Dichloroethene	10	U	0.5	UJ	0.5	UJ	0.5	U	0.5	UJ	0.5	UJ	0.5	UJ	0.5	UJ
trans-1,3-Dichloropropene	10	U	0.5	UJ	0.5	UJ	0.5	U	0.5	UJ	0.5	UJ	0.5	UJ	0.5	UJ
Semi-volatile Organic Compounds (UG/L)																
1,1-Biphenyl	NA		5.6	R	5.6	R	NA		5.3	U	NA		5.3	U	NA	
1,2,4,5-Tetrachlorobenzene	NA		5.6	R	5.6	R	NA		5.3	U	NA		5.3	U	NA	
2,4,5-Trichlorophenol	NA		22	R	22	R	NA		21	U	NA		21	U	NA	
2,4,6-Trichlorophenol	NA		5.6	R	5.6	R	NA		5.3	U	NA		5.3	U	NA	
2,4-Dichlorophenol	NA		5.6	R	5.6	R	NA		5.3	U	NA		5.3	U	NA	
2,4-Dimethylphenol	NA		5.6	R	5.6	R	NA		5.3	U	NA		5.3	U	NA	
2,4-Dinitrophenol	NA		22	R	22	R	NA		21	U	NA		21	U	NA	
2,4-Dinitrotoluene	NA		5.6	R	5.6	R	NA		5.3	U	NA		5.3	U	NA	
2,6-Dinitrotoluene	NA		5.6	R	5.6	R	NA		5.3	R	NA		5.3	R	NA	
2-Chloronaphthalene	NA		5.6	R	5.6	R	NA		5.3	U	NA		5.3	U	NA	
2-Chlorophenol	NA		5.6	R	5.6	R	NA		5.3	U	NA		5.3	U	NA	
2-Methylnaphthalene	NA		5.6	R	5.6	R	NA		5.3	U	NA		5.3	U	NA	
2-Methylphenol	NA		5.6	R	5.6	R	NA		5.3	U	NA		5.3	U	NA	

NA - Not analyzed
B - Analyte not detected above associated blank
J - Reported value is estimated
K - Reported value may be biased high
L - Reported value may be biased low

R - Unreliable result
U - Analyte not detected
UJ

Table I-5
Complete Data of Monitoring Well Samples
Site 49 RI Report
NSWC - White Oak, Silver Spring, Maryland

Station ID	49GW202D		49GW202S						49GW203				49GW204			
Sample ID	049GW202D001		049GW2020001		049GW2029901		049GW2020002		049GW2030001		049GW2030002		049GW2040001		049GW2040002	
Sample Date	02/11/03		08/01/02		08/01/02		10/09/02		08/02/02		10/09/02		08/01/02		10/09/02	
Chemical Name																
2-Nitroaniline	NA		22	R	22	R	NA		21	U	NA		21	U	NA	
2-Nitrophenol	NA		5.6	R	5.6	R	NA		5.3	U	NA		5.3	U	NA	
3,3'-Dichlorobenzidine	NA		5.6	R	5.6	R	NA		5.3	U	NA		5.3	U	NA	
3-Nitroaniline	NA		22	R	22	R	NA		21	U	NA		21	U	NA	
4,6-Dinitro-2-methylphenol	NA		22	R	22	R	NA		21	U	NA		21	U	NA	
4-Bromophenyl-phenylether	NA		5.6	R	5.6	R	NA		5.3	U	NA		5.3	U	NA	
4-Chloro-3-methylphenol	NA		5.6	R	5.6	R	NA		5.3	U	NA		5.3	U	NA	
4-Chloroaniline	NA		5.6	R	5.6	R	NA		5.3	U	NA		5.3	U	NA	
4-Chlorophenyl-phenylether	NA		5.6	R	5.6	R	NA		5.3	U	NA		5.3	U	NA	
4-Methylphenol	NA		5.6	R	5.6	R	NA		5.3	U	NA		5.3	U	NA	
4-Nitroaniline	NA		22	R	22	R	NA		21	U	NA		21	U	NA	
4-Nitrophenol	NA		22	R	22	R	NA		21	U	NA		21	U	NA	
Acenaphthene	NA		5.6	R	5.6	R	NA		2.8	J	NA		5.3	U	NA	
Acenaphthylene	NA		5.6	R	5.6	R	NA		5.3	U	NA		5.3	U	NA	
Acetophenone	NA		5.6	R	5.6	R	NA		5.3	U	NA		5.3	U	NA	
Anthracene	NA		5.6	R	5.6	R	NA		5.3	U	NA		5.3	U	NA	
Atrazine	NA		5.6	R	5.6	R	NA		5.3	U	NA		5.3	U	NA	
Benzaldehyde	NA		5.6	R	5.6	R	NA		5.3	U	NA		5.3	U	NA	
Benzo(a)anthracene	NA		5.6	R	5.6	R	NA		5.3	U	NA		5.3	U	NA	
Benzo(a)pyrene	NA		5.6	R	5.6	R	NA		5.3	U	NA		5.3	U	NA	
Benzo(b)fluoranthene	NA		5.6	R	5.6	R	NA		5.3	U	NA		5.3	U	NA	
Benzo(g,h,i)perylene	NA		5.6	R	5.6	R	NA		5.3	U	NA		5.3	U	NA	
Benzo(k)fluoranthene	NA		5.6	R	5.6	R	NA		5.3	U	NA		5.3	U	NA	
Bis(2-chloro-1-methylethyl) ether	NA		5.6	R	5.6	R	NA		5.3	U	NA		5.3	U	NA	
Butylbenzylphthalate	NA		5.6	R	5.6	R	NA		5.3	U	NA		5.3	U	NA	
Caprolactam	NA		5.6	R	5.6	R	NA		5.3	U	NA		5.3	U	NA	
Chrysene	NA		5.6	R	5.6	R	NA		5.3	U	NA		5.3	U	NA	
Di-n-butylphthalate	NA		5.6	R	5.6	R	NA		5.3	U	NA		5.3	U	NA	
Di-n-octylphthalate	NA		5.6	R	5.6	R	NA		5.3	U	NA		5.3	U	NA	
Dibenz(a,h)anthracene	NA		5.6	R	5.6	R	NA		5.3	U	NA		5.3	U	NA	
Dibenzofuran	NA		5.6	R	5.6	R	NA		5.3	U	NA		5.3	U	NA	
Diethylphthalate	NA		5.6	R	5.6	R	NA		5.3	U	NA		5.3	U	NA	
Dimethyl phthalate	NA		5.6	R	5.6	R	NA		5.3	U	NA		5.3	U	NA	
Fluoranthene	NA		5.6	R	5.6	R	NA		5.3	U	NA		5.3	U	NA	
Fluorene	NA		5.6	R	5.6	R	NA		5.3	U	NA		5.3	U	NA	

NA - Not analyzed
B - Analyte not detected above associated blank
J - Reported value is estimated
K - Reported value may be biased high
L - Reported value may be biased low

R - Unreliable result
U - Analyte not detected
UJ
UL

Table I-5
Complete Data of Monitoring Well Samples
Site 49 RI Report
NSWC - White Oak, Silver Spring, Maryland

Station ID	49GW202D	49GW202S			49GW203		49GW204	
Sample ID	049GW202D001	049GW2020001	049GW2029901	049GW2020002	049GW2030001	049GW2030002	049GW2040001	049GW2040002
Sample Date	02/11/03	08/01/02	08/01/02	10/09/02	08/02/02	10/09/02	08/01/02	10/09/02
Chemical Name								
Hexachlorobenzene	NA	5.6 R	5.6 R	NA	5.3 U	NA	5.3 U	NA
Hexachlorobutadiene	NA	5.6 R	5.6 R	NA	5.3 U	NA	5.3 U	NA
Hexachlorocyclopentadiene	NA	5.6 R	5.6 R	NA	5.3 U	NA	5.3 U	NA
Hexachloroethane	NA	5.6 R	5.6 R	NA	5.3 U	NA	5.3 U	NA
Indeno(1,2,3-cd)pyrene	NA	5.6 R	5.6 R	NA	5.3 U	NA	5.3 U	NA
Isophorone	NA	5.6 R	5.6 R	NA	5.3 U	NA	5.3 U	NA
Naphthalene	NA	5.6 R	5.6 R	NA	5.3 U	NA	5.3 U	NA
Nitrobenzene	NA	5.6 R	5.6 R	NA	5.3 U	NA	5.3 R	NA
Pentachlorophenol	NA	5.6 R	5.6 R	NA	5.3 U	NA	5.3 U	NA
Phenanthrene	NA	5.6 R	5.6 R	NA	1.3 J	NA	5.3 U	NA
Phenol	NA	5.6 R	5.6 R	NA	5.3 U	NA	5.3 U	NA
Pyrene	NA	5.6 R	5.6 R	NA	5.3 U	NA	5.3 U	NA
bis(2-Chloroethoxy)methane	NA	5.6 R	5.6 R	NA	5.3 U	NA	5.3 U	NA
bis(2-Chloroethyl)ether	NA	5.6 R	5.6 R	NA	5.3 U	NA	5.3 U	NA
bis(2-Ethylhexyl)phthalate	NA	5.6 R	5.6 R	NA	1.8 B	NA	1.3 B	NA
n-Nitroso-di-n-propylamine	NA	5.6 R	5.6 R	NA	5.3 U	NA	5.3 U	NA
n-Nitrosodiphenylamine	NA	5.6 R	5.6 R	NA	5.3 U	NA	5.3 U	NA
Explosives (UG/L)								
1,3,5-Trinitrobenzene	NA	0.26 U	0.26 U	NA	0.26 U	NA	0.26 U	NA
1,3-Dinitrobenzene	NA	0.26 U	0.26 U	NA	0.26 U	NA	0.26 U	NA
2,4,6-Trinitrotoluene	NA	0.26 U	0.26 U	NA	0.26 U	NA	0.26 U	NA
2,4-Dinitrotoluene	NA	0.26 UL	0.26 UL	NA	0.26 R	NA	0.26 R	NA
2,6-Dinitrotoluene	NA	0.26 U	0.26 U	NA	0.26 U	NA	0.26 U	NA
2-Amino-4,6-dinitrotoluene	NA	0.26 U	0.26 U	NA	0.26 U	NA	0.26 U	NA
2-Nitrotoluene	NA	0.52 U	0.52 U	NA	0.52 UL	NA	0.52 U	NA
3-Nitrotoluene	NA	0.52 U	0.52 U	NA	0.52 UL	NA	0.52 U	NA
4-Amino-2,6-dinitrotoluene	NA	0.26 U	0.26 U	NA	0.26 U	NA	0.26 U	NA
4-Nitrotoluene	NA	0.52 U	0.52 U	NA	0.52 U	NA	0.52 U	NA
HMX	NA	0.52 U	0.52 U	NA	0.52 U	NA	0.52 U	NA
Nitrobenzene	NA	0.26 U	0.26 U	NA	0.26 R	NA	0.26 U	NA
Perchlorate	NA	4 U	4 U	NA	4 U	NA	4 U	NA
RDX	NA	0.52 U	0.52 U	NA	0.52 U	NA	0.52 U	NA
Tetryl	NA	0.52 U	0.52 U	NA	0.52 R	NA	0.52 U	NA

NA - Not analyzed
B - Analyte not detected above associated blank
J - Reported value is estimated
K - Repor[illegible] value may be biased high
L - Rep[illegible] alue may be biased low

R - Unreliable result
U - Analyte not detected
UJ
[illegible]

Table I-5
Complete Data of Monitoring Well Samples
Site 49 RI Report
NSWC - White Oak, Silver Spring, Maryland

Station ID	49GW202D	49GW202S			49GW203		49GW204	
Sample ID	049GW202D001	049GW2020001	049GW2029901	049GW2020002	049GW2030001	049GW2030002	049GW2040001	049GW2040002
Sample Date	02/11/03	08/01/02	08/01/02	10/09/02	08/02/02	10/09/02	08/01/02	10/09/02
Chemical Name								
Total Metals (UG/L)								
Aluminum	62.2 B	29,000	25,600	NA	88.8 J	NA	2,840	NA
Ammonia	NA	NA	NA	NA	NA	NA	NA	NA
Antimony	1.7 U	3.9 U	3.9 U	NA	3.9 U	NA	3.9 U	NA
Arsenic	2.3 U	6.4 J	8.6 J	NA	2.8 U	NA	2.8 U	NA
Barium	75.6 J	190 J	170 J	NA	81.7 J	NA	85.9 J	NA
Beryllium	0.1 U	1.7 J	1.5 J	NA	0.14 J	NA	0.46 J	NA
Cadmium	0.33 B	0.2 U	0.2 U	NA	0.2 U	NA	0.2 U	NA
Calcium	20,500	19,200	18,300	NA	24,600	NA	16,100	NA
Chromium	3.1 B	910	769	NA	0.68 B	NA	104	NA
Cobalt	0.5 U	29 J	25.5 J	NA	4.4 J	NA	10.8 J	NA
Copper	10.2 J	80.5	67.1	NA	1.4 B	NA	21.6 B	NA
Cyanide	10 U	10 U	10 U	NA	10 U	NA	10 U	NA
Iron	49.2 B	41,700	35,900	NA	9,150	NA	9,880	NA
Lead	20.3 L	16	14.7	NA	1.6 U	NA	5.3 B	NA
Magnesium	10,200 K	14,100	13,100	NA	11,200	NA	7,700	NA
Manganese	29.3	857	778	NA	2,250	NA	935	NA
Mercury	0.1 U	0.1 U	0.1 U	NA	0.1 U	NA	0.1 U	NA
Nickel	14 J	625	528	NA	13.5 J	NA	74.3	NA
Potassium	5,520	18,700	17,400	NA	6,420	NA	5,550	NA
Selenium	1.6 U	2.5 U	2.8 B	NA	2.5 U	NA	2.5 U	NA
Silver	0.4 U	0.8 U	0.8 U	NA	0.8 U	NA	0.8 U	NA
Sodium	25,000 K	25,100	25,200	NA	33,200	NA	17,600	NA
Thallium	3.1 U	4 U	4 U	NA	4 U	NA	4 U	NA
Vanadium	0.75 B	39.7 J	34.6 J	NA	1.2 J	NA	2.8 J	NA
Zinc	57.8	143	132	NA	17.1 J	NA	98.2	NA
Dissolved Metals (UG/L)								
Aluminum	46 B	262	219	NA	23.1 U	NA	48.2 B	NA
Antimony	1.7 U	3.9 U	3.9 U	NA	3.9 U	NA	3.9 U	NA
Arsenic	2.3 U	2.8 U	2.8 U	NA	2.8 U	NA	2.8 U	NA
Barium	75.1 J	26.9 J	26.3 J	NA	83.5 J	NA	68.7 J	NA
Beryllium	0.1 U	0.1 U	0.1 U	NA	0.1 U	NA	0.12 J	NA
Cadmium	0.3 U	0.2 U	0.2 U	NA	0.2 U	NA	0.2 U	NA
Calcium	20,400	14,900	14,500	NA	24,600	NA	14,800	NA

NA - Not analyzed
B - Analyte not detected above associated blank
J - Reported value is estimated
K - Reported value may be biased high
L - Reported value may be biased low

R - Unreliable result
U - Analyte not detected
UJ
UL

Table I-5
Complete Data of Monitoring Well Samples
Site 49 RI Report
NSWC - White Oak, Silver Spring, Maryland

Station ID	49GW202D	49GW202S			49GW203		49GW204	
Sample ID	049GW202D001	049GW2020001	049GW2029901	049GW2020002	049GW2030001	049GW2030002	049GW2040001	049GW2040002
Sample Date	02/11/03	08/01/02	08/01/02	10/09/02	08/02/02	10/09/02	08/01/02	10/09/02
Chemical Name								
Chromium	0.87 B	8.6 B	5.3 B	NA	0.5 U	NA	0.5 U	NA
Cobalt	0.5 U	8 J	7.5 J	NA	4 J	NA	3 J	NA
Copper	6.8 J	3.8 B	3.1 B	NA	1.5 B	NA	3.8 B	NA
Cyanide	10 U	NA	NA	NA	NA	NA	NA	NA
Iron	14.4 B	798	659	NA	9,350	NA	6,080	NA
Lead	13.9 L	1.6 U	2.1 B	NA	1.6 U	NA	1.6 U	NA
Magnesium	10,100 K	6,420	6,210	NA	10,900	NA	7,010	NA
Manganese	27.9	336	328	NA	2,290	NA	831	NA
Mercury	0.1 U	0.1 U	0.1 U	NA	0.1 U	NA	0.1 U	NA
Nickel	13.5 J	38.9 J	47.7	NA	12.9 J	NA	11.3 J	NA
Potassium	5,510	6,310	6,330	NA	6,080	NA	4,480 J	NA
Selenium	1.6 U	2.5 U	2.5 U	NA	2.5 U	NA	2.5 U	NA
Silver	0.4 U	0.8 U	0.8 U	NA	0.8 U	NA	0.8 U	NA
Sodium	25,000 K	20,800	20,600	NA	31,800	NA	15,900	NA
Thallium	3.1 U	4 U	4 U	NA	4 U	NA	4 U	NA
Vanadium	0.51 B	0.8 U	0.8 U	NA	0.8 U	NA	0.8 U	NA
Zinc	39.5 B	47.5	42	NA	12 J	NA	41.6	NA
Wet Chemistry (MG/L)								
Alkalinity	24	1 U	47	NA	24	NA	38	NA
Ammonia	0.1 U	NA	NA	NA	NA	NA	NA	NA
Chloride	78	26	23	NA	100	NA	34	NA
Nitrate	0.3 L	42	0.14	NA	0.1 UJ	NA	1.4	NA
Nitrogen	0.1 UL	0.1 U	0.1 U	NA	0.1 U	NA	0.1 U	NA
Orthophosphate	NA	NA	NA	NA	0.1 UJ	NA	NA	NA
Phosphorus	NA	1	0.1 U	NA	NA	NA	0.1 U	NA
Sulfate	13	12	14	NA	6.4	NA	2.5	NA

NA - Not analyzed
B - Analyte not detected above associated blank
J - Reported value is estimated
K - Reported value may be biased high
L - Reported value may be biased low

R - Unreliable result
U - Analyte not detected
UJ
UL

Table I-5
Complete Data of Monitoring Well Samples
Site 49 RI Report
NSWC - White Oak, Silver Spring, Maryland

Station ID	49GW206D				49GW206M		49GW206S	
Sample ID	049GW206D9901		049GW206D001		049GW206M001		049GW206S0001	
Sample Date	02/12/03		02/13/03		02/12/03		02/11/03	
Chemical Name								
Volatile Organic Compounds (UG/L)								
1,1,1-Trichloroethane	10	U	10	U	10	U	10	U
1,1,2,2-Tetrachloroethane	10	U	10	U	10	U	10	U
1,1,2-Trichloro-1,2,2-trifluoroethane(Freon-113)	10	U	10	U	10	U	10	U
1,1,2-Trichloroethane	10	U	10	U	10	U	10	U
1,1-Dichloroethane	10	U	10	U	10	U	10	U
1,1-Dichloroethene	10	U	10	U	10	U	1.3	J
1,2,3-Trichlorobenzene	NA		NA		NA		NA	
1,2,4-Trichlorobenzene	10	U	10	U	10	U	10	U
1,2-Dibromo-3-chloropropane	10	U	10	U	10	U	10	U
1,2-Dibromoethane	10	U	10	U	10	U	10	U
1,2-Dichlorobenzene	10	U	10	U	10	U	10	U
1,2-Dichloroethane	10	U	10	U	10	U	10	U
1,2-Dichloropropane	10	U	10	U	10	U	10	U
1,3-Dichlorobenzene	10	U	10	U	10	U	10	U
1,4-Dichlorobenzene	10	U	10	U	10	U	10	U
2-Butanone	2.8	B	3.3	B	10	U	10	U
2-Hexanone	10	U	10	U	10	U	10	U
4-Methyl-2-pentanone	10	U	10	U	10	U	10	U
Acetone	40	B	43	B	7.2	B	10	U
Benzene	10	U	10	U	10	U	10	U
Bromochloromethane	NA		NA		NA		NA	
Bromodichloromethane	10	U	10	U	10	U	10	U
Bromoform	10	U	10	U	10	U	10	U
Bromomethane	10	U	10	U	10	U	10	U
Carbon disulfide	10	U	10	U	10	U	10	U
Carbon tetrachloride	10	U	10	U	10	U	10	U
Chlorobenzene	10	U	10	U	10	U	10	U
Chloroethane	10	U	10	U	10	U	10	U
Chloroform	37		37		10	U	4.2	J
Chloromethane	10	U	10	U	10	U	10	U
Cumene	10	U	10	U	10	U	10	U
Cyclohexane	10	U	10	U	10	U	10	U
Dibromochloromethane	10	U	10	U	10	U	10	U

NA - Not analyzed
B - Analyte not detected above associated blank
J - Reported value is estimated
K - Reported value may be biased high
L - Reported value may be biased low

R - Unreliable result
U - Analyte not detected
UJ
UL

Table I-5
Complete Data of Monitoring Well Samples
Site 49 RI Report
NSWC - White Oak, Silver Spring, Maryland

Station ID	49GW206D		49GW206M	49GW206S
Sample ID	049GW206D9901	049GW206D001	049GW206M001	049GW206S0001
Sample Date	02/12/03	02/13/03	02/12/03	02/11/03
Chemical Name				
Dichlorodifluoromethane(Freon-12)	10 U	10 U	10 U	10 U
Ethane	NA	NA	NA	NA
Ethene	NA	NA	NA	NA
Ethylbenzene	10 U	10 U	10 U	10 U
Methane	NA	NA	NA	NA
Methyl acetate	10 U	10 U	10 U	10 U
Methyl-tert-butyl ether (MTBE)	1.2 J	1.3 J	10 U	10 U
Methylcyclohexane	10 U	10 U	10 U	10 U
Methylene chloride	10 U	10 U	10 U	10 U
Styrene	10 U	10 U	10 U	10 U
Tetrachloroethene	10 U	10 U	10 U	1.1 J
Toluene	10 U	10 U	1.5 J	10 U
Trichloroethene	140	140	180	560
Trichlorofluoromethane(Freon-11)	10 U	10 U	10 U	10 U
Vinyl chloride	10 U	10 U	10 U	10 U
Xylene, total	10 U	10 U	10 U	10 U
cis-1,2-Dichloroethene	91	90	64	150
cis-1,3-Dichloropropene	10 U	10 U	10 U	10 U
trans-1,2-Dichloroethene	2.9 J	3.1 J	10 U	10 U
trans-1,3-Dichloropropene	10 U	10 U	10 U	10 U
Semi-volatile Organic Compounds (UG/L)				
1,1-Biphenyl	NA	NA	NA	NA
1,2,4,5-Tetrachlorobenzene	NA	NA	NA	NA
2,4,5-Trichlorophenol	NA	NA	NA	NA
2,4,6-Trichlorophenol	NA	NA	NA	NA
2,4-Dichlorophenol	NA	NA	NA	NA
2,4-Dimethylphenol	NA	NA	NA	NA
2,4-Dinitrophenol	NA	NA	NA	NA
2,4-Dinitrotoluene	NA	NA	NA	NA
2,6-Dinitrotoluene	NA	NA	NA	NA
2-Chloronaphthalene	NA	NA	NA	NA
2-Chlorophenol	NA	NA	NA	NA
2-Methylnaphthalene	NA	NA	NA	NA
2-Methylphenol	NA	NA	NA	NA

NA - Not analyzed
B - Analyte not detected above associated blank
J - Reported value is estimated
K - Reported value may be biased high
L - Repo[illegible]lue may be biased low

R - Unreliable result
U - Analyte not detected
UJ
UL

Table I-5
Complete Data of Monitoring Well Samples
Site 49 RI Report
NSWC - White Oak, Silver Spring, Maryland

Station ID	49GW206D		49GW206M	49GW206S
Sample ID	049GW206D9901	049GW206D001	049GW206M001	049GW206S0001
Sample Date	02/12/03	02/13/03	02/12/03	02/11/03
Chemical Name				
2-Nitroaniline	NA	NA	NA	NA
2-Nitrophenol	NA	NA	NA	NA
3,3'-Dichlorobenzidine	NA	NA	NA	NA
3-Nitroaniline	NA	NA	NA	NA
4,6-Dinitro-2-methylphenol	NA	NA	NA	NA
4-Bromophenyl-phenylether	NA	NA	NA	NA
4-Chloro-3-methylphenol	NA	NA	NA	NA
4-Chloroaniline	NA	NA	NA	NA
4-Chlorophenyl-phenylether	NA	NA	NA	NA
4-Methylphenol	NA	NA	NA	NA
4-Nitroaniline	NA	NA	NA	NA
4-Nitrophenol	NA	NA	NA	NA
Acenaphthene	NA	NA	NA	NA
Acenaphthylene	NA	NA	NA	NA
Acetophenone	NA	NA	NA	NA
Anthracene	NA	NA	NA	NA
Atrazine	NA	NA	NA	NA
Benzaldehyde	NA	NA	NA	NA
Benzo(a)anthracene	NA	NA	NA	NA
Benzo(a)pyrene	NA	NA	NA	NA
Benzo(b)fluoranthene	NA	NA	NA	NA
Benzo(g,h,i)perylene	NA	NA	NA	NA
Benzo(k)fluoranthene	NA	NA	NA	NA
Bis(2-chloro-1-methylethyl) ether	NA	NA	NA	NA
Butylbenzylphthalate	NA	NA	NA	NA
Caprolactam	NA	NA	NA	NA
Chrysene	NA	NA	NA	NA
Di-n-butylphthalate	NA	NA	NA	NA
Di-n-octylphthalate	NA	NA	NA	NA
Dibenz(a,h)anthracene	NA	NA	NA	NA
Dibenzofuran	NA	NA	NA	NA
Diethylphthalate	NA	NA	NA	NA
Dimethyl phthalate	NA	NA	NA	NA
Fluoranthene	NA	NA	NA	NA
Fluorene	NA	NA	NA	NA

NA - Not analyzed
B - Analyte not detected above associated blank
J - Reported value is estimated
K - Reported value may be biased high
L - Reported value may be biased low

R - Unreliable result
U - Analyte not detected
UJ
UL

Table I-5
Complete Data of Monitoring Well Samples
Site 49 RI Report
NSWC - White Oak, Silver Spring, Maryland

Station ID	49GW206D		49GW206M	49GW206S
Sample ID	049GW206D9901	049GW206D001	049GW206M001	049GW206S0001
Sample Date	02/12/03	02/13/03	02/12/03	02/11/03
Chemical Name				
Hexachlorobenzene	NA	NA	NA	NA
Hexachlorobutadiene	NA	NA	NA	NA
Hexachlorocyclopentadiene	NA	NA	NA	NA
Hexachloroethane	NA	NA	NA	NA
Indeno(1,2,3-cd)pyrene	NA	NA	NA	NA
Isophorone	NA	NA	NA	NA
Naphthalene	NA	NA	NA	NA
Nitrobenzene	NA	NA	NA	NA
Pentachlorophenol	NA	NA	NA	NA
Phenanthrene	NA	NA	NA	NA
Phenol	NA	NA	NA	NA
Pyrene	NA	NA	NA	NA
bis(2-Chloroethoxy)methane	NA	NA	NA	NA
bis(2-Chloroethyl)ether	NA	NA	NA	NA
bis(2-Ethylhexyl)phthalate	NA	NA	NA	NA
n-Nitroso-di-n-propylamine	NA	NA	NA	NA
n-Nitrosodiphenylamine	NA	NA	NA	NA
Explosives (UG/L)				
1,3,5-Trinitrobenzene	NA	NA	NA	NA
1,3-Dinitrobenzene	NA	NA	NA	NA
2,4,6-Trinitrotoluene	NA	NA	NA	NA
2,4-Dinitrotoluene	NA	NA	NA	NA
2,6-Dinitrotoluene	NA	NA	NA	NA
2-Amino-4,6-dinitrotoluene	NA	NA	NA	NA
2-Nitrotoluene	NA	NA	NA	NA
3-Nitrotoluene	NA	NA	NA	NA
4-Amino-2,6-dinitrotoluene	NA	NA	NA	NA
4-Nitrotoluene	NA	NA	NA	NA
HMX	NA	NA	NA	NA
Nitrobenzene	NA	NA	NA	NA
Perchlorate	NA	NA	NA	NA
RDX	NA	NA	NA	NA
Tetryl	NA	NA	NA	NA

NA - Not analyzed
B - Analyte not detected above associated blank
J - Reported value is estimated
K - Reported value may be biased high
L - Repc lue may be biased low

R - Unreliable result
U - Analyte not detected
UJ
UL

Table I-5
Complete Data of Monitoring Well Samples
Site 49 RI Report
NSWC - White Oak, Silver Spring, Maryland

Station ID	49GW206D		49GW206M	49GW206S
Sample ID	049GW206D9901	049GW206D001	049GW206M001	049GW206S0001
Sample Date	02/12/03	02/13/03	02/12/03	02/11/03
Chemical Name				
Total Metals (UG/L)				
Aluminum	898	2,600	35,600	161 B
Ammonia	100 U	100 U	100 U	NA
Antimony	3.2 B	3.5 B	1.7 U	2.5 B
Arsenic	2.8 J	2.3 U	8.7 J	2.3 U
Barium	27.9 J	43 J	225	37.6 J
Beryllium	0.1 U	0.1 U	1.9 J	0.1 U
Cadmium	0.3 U	0.3 U	0.3 U	0.3 U
Calcium	37,600 K	44,600	24,200 K	9,870
Chromium	39	62.6	839	16.7
Cobalt	2.5 B	3.2 J	42.5 J	3 J
Copper	22 J	45.5	166	3.9 B
Cyanide	10 U	10 U	10 U	10 U
Iron	1,420	4,080	72,400	2,630
Lead	6.2	12.2 L	15.2 L	4.7 L
Magnesium	7,920 K	8,880 K	19,600 K	4,710 J
Manganese	47.7	90.6	1,630	275
Mercury	0.1 U	0.1 U	0.1 U	0.1 U
Nickel	26.5 J	40.7	278	21.2 J
Potassium	9,450	10,200	21,900	3,670 J
Selenium	4.8 J	4.1 J	1.6 U	1.6 U
Silver	0.4 U	0.4 U	1.7 B	0.4 U
Sodium	136,000 K	135,000 K	27,900 K	20,900 K
Thallium	3.1 U	3.1 U	3.1 U	3.1 U
Vanadium	20.1 J	23.9 J	62.5	0.5 U
Zinc	26.6 B	127	185	24.1 B
Dissolved Metals (UG/L)				
Aluminum	NA	105 B	6,800	30.8 B
Antimony	NA	1.7 U	2 B	1.7 U
Arsenic	NA	2.3 U	2.3 U	2.3 U
Barium	NA	24.2 J	67.6 J	34 J
Beryllium	NA	0.1 U	0.25 B	0.1 U
Cadmium	NA	0.3 U	0.3 U	0.3 U
Calcium	NA	38,200	17,400 K	9,140

NA - Not analyzed
B - Analyte not detected above associated blank
J - Reported value is estimated
K - Reported value may be biased high
L - Reported value may be biased low

R - Unreliable result
U - Analyte not detected
UJ
UL

Table I-5
Complete Data of Monitoring Well Samples
Site 49 RI Report
NSWC - White Oak, Silver Spring, Maryland

Station ID	49GW206D		49GW206M	49GW206S
Sample ID	049GW206D9901	049GW206D001	049GW206M001	049GW206S0001
Sample Date	02/12/03	02/13/03	02/12/03	02/11/03
Chemical Name				
Chromium	NA	25.4	75.5	2.4 B
Cobalt	NA	0.5 U	10.6 J	2.2 B
Copper	NA	5.4 B	28.6	0.5 U
Cyanide	10 U	10 U	10 U	10 U
Iron	NA	500	14,100	1,810
Lead	NA	3 L	2.9 J	5.2 L
Magnesium	NA	8,000 K	10,200 K	4,360 J
Manganese	NA	38.1	898	216
Mercury	NA	0.1 U	0.1 U	0.1 U
Nickel	NA	13.1 J	81	17.1 J
Potassium	NA	9,650	11,300	3,240 J
Selenium	NA	5.3	1.6 U	1.6 U
Silver	NA	0.4 U	0.4 U	0.4 U
Sodium	NA	132,000 K	21,400 K	19,400 K
Thallium	NA	3.1 U	3.1 U	3.1 U
Vanadium	NA	20.6 J	10 J	0.5 U
Zinc	NA	28.1 B	44.8 B	17.8 B
Wet Chemistry (MG/L)				
Alkalinity	110	120	51	15
Ammonia	NA	NA	NA	0.1 U
Chloride	33	34	40	42
Nitrate	0.1 U	0.1 U	0.1 U	0.38 L
Nitrogen	0.1 U	0.1 U	0.1 U	0.1 UL
Orthophosphate	NA	NA	NA	NA
Phosphorus	NA	NA	NA	NA
Sulfate	250	230	18	15

NA - Not analyzed
B - Analyte not detected above associated blank
J - Reported value is estimated
K - Repor[illegible] value may be biased high
L - Rep[illegible] alue may be biased low

R - Unreliable result
U - Analyte not detected
UJ
[illegible]

Table I-6
Complete Data for Borehole Water Samples During Packer Test
Site 49 RI Report
NSWC - White Oak, Silver Spring, Maryland

Station ID	49TW201DD			49TW206D			
Sample ID	049PT201DD4860	049PT201DD6780	049PT201DD8099	049PT206D7080	049PT206D9099	049PT206D110120	049PT206D130140
Sample Date	11/20/02	11/21/02	11/24/02	12/03/02	12/05/02	12/06/02	12/09/02
Chemical Name							
Volatile Organic Compounds (UG/L)							
1,1,1-Trichloroethane	0.5 U	0.5 U	0.5 U	0.5 U	0.5 U	0.5 U	0.5 U
1,1,2,2-Tetrachloroethane	0.5 U	0.5 U	0.5 U	0.5 U	0.5 U	0.5 U	0.5 U
1,1,2-Trichloro-1,2,2-trifluoroethane(Freon-113)	0.5 U	0.5 U	0.5 U	0.5 U	0.5 U	0.5 U	0.5 U
1,1,2-Trichloroethane	0.5 U	0.5 U	0.5 U	0.5 U	0.5 U	0.5 U	0.5 U
1,1-Dichloroethane	1.4	0.5 U	0.5 U	0.5 U	0.52	0.82	0.82
1,1-Dichloroethene	6.9	0.5 U	0.5 U	0.5 U	2.5	4.4	3.5
1,2,3-Trichlorobenzene	0.5 U	0.5 U	0.5 U	0.5 U	0.5 U	0.5 U	0.5 U
1,2,4-Trichlorobenzene	0.5 U	0.5 U	0.5 U	0.5 U	0.5 U	0.5 U	0.5 U
1,2-Dibromo-3-chloropropane	0.5 U	0.5 U	0.5 U	0.5 U	0.5 U	0.5 U	0.5 U
1,2-Dibromoethane	0.5 U	0.5 U	0.5 U	0.5 U	0.5 U	0.5 U	0.5 U
1,2-Dichlorobenzene	0.5 U	0.5 U	0.5 U	0.5 U	0.5 U	0.5 U	0.5 U
1,2-Dichloroethane	0.5 U	0.5 U	0.5 U	0.5 U	0.5 U	0.5 U	0.5 U
1,2-Dichloropropane	0.5 U	0.5 U	0.5 U	0.5 U	0.5 U	0.5 U	0.5 U
1,3-Dichlorobenzene	0.5 U	0.5 U	0.5 U	0.5 U	0.5 U	0.5 U	0.5 U
1,4-Dichlorobenzene	0.5 U	0.5 U	0.5 U	0.5 U	0.5 U	0.5 U	0.5 U
2-Butanone	5 U	5 U	5 U	5 U	5 U	5 U	5 U
2-Hexanone	5 U	5 U	5 U	5 U	5 U	5 U	5 U
4-Methyl-2-pentanone	5 U	5 U	5 U	5 U	5 U	5 U	5 U
Acetone	7.4 B	5 U	8.9	2.6 B	5 U	5 U	5 B
Benzene	0.5 U	0.5 U	0.5 U	0.5 U	0.5 U	0.5 U	0.5 U
Bromochloromethane	0.5 U	0.5 U	0.5 U	0.5 U	0.5 U	0.5 U	0.5 U
Bromodichloromethane	2.6	0.29 J	0.28 J	0.66	0.5 U	0.5 U	0.5 U
Bromoform	0.5 U	0.5 U	0.5 U	0.5 U	0.5 U	0.5 U	0.5 U
Bromomethane	0.5 U	0.5 U	0.5 U	0.5 U	0.5 U	0.5 U	0.5 U
Carbon disulfide	0.5 U	0.5 U	0.5 U	0.5 U	0.5 U	0.5 U	0.5 U
Carbon tetrachloride	0.5 U	0.5 U	0.5 U	0.5 U	0.5 U	0.5 U	0.5 U
Chlorobenzene	0.5 U	0.5 U	0.5 U	0.5 U	0.5 U	0.5 U	0.5 U
Chloroethane	0.5 U	0.5 U	0.5 U	0.5 U	0.5 U	0.5 U	0.5 U
Chloroform	38 J	6	8.2	4.6	0.5 U	0.5 U	0.5 U
Chloromethane	0.5 U	0.5 U	0.5 U	0.5 U	0.5 U	0.5 U	0.5 U
Cumene	0.5 U	0.5 U	0.5 U	0.5 U	0.5 U	0.5 U	0.5 U
Cyclohexane	0.5 U	0.5 U	0.5 U	0.5 U	0.5 U	0.5 U	0.5 U
Dibromochloromethane	0.82	0.5 U	0.5 U	0.5 U	0.5 U	0.5 U	0.5 U

NA - Not analyzed
B - Blank contamination
J - Estimated
U - Undetected

Table I-6
Complete Data for Borehole Water Samples During Packer Test
Site 49 RI Report
NSWC - White Oak, Silver Spring, Maryland

Station ID	49TW201DD			49TW206D			
Sample ID	049PT201DD4860	049PT201DD6780	049PT201DD8099	049PT206D7080	049PT206D9099	049PT206D110120	049PT206D130140
Sample Date	11/20/02	11/21/02	11/24/02	12/03/02	12/05/02	12/06/02	12/09/02
Chemical Name							
Dichlorodifluoromethane(Freon-12)	0.5 U	0.5 U	0.5 U	0.5 U	0.5 U	0.5 U	0.5 U
Ethylbenzene	0.5 U	0.5 U	0.5 U	0.5 U	0.5 U	0.5 U	0.5 U
Methyl acetate	0.5 U	0.5 U	0.5 U	0.5 U	0.5 U	0.5 U	0.5 U
Methyl-tert-butyl ether (MTBE)	0.5 U	0.5 U	0.5 U	0.5 U	0.5 U	0.5 U	0.5 U
Methylcyclohexane	0.5 U	0.5 U	0.5 U	0.5 U	0.5 U	0.5 U	0.5 U
Methylene chloride	2.4 B	1.8 B	0.99 B	1.3 B	0.98 B	1.1 B	0.95 B
Styrene	0.5 U	0.5 U	0.5 U	0.5 U	0.5 U	0.5 U	0.5 U
Tetrachloroethene	0.5 U	0.5 U	0.5 U	0.5 U	0.5 U	0.5 U	0.5 U
Toluene	1.4	25	49	3.1	5.3	1.4	3.6
Trichloroethene	3,100	2.8	4.3	54	810	1,600	920
Trichlorofluoromethane(Freon-11)	0.5 U	0.5 U	0.5 U	0.5 U	0.5 U	0.5 U	0.5 U
Vinyl chloride	3.1	0.5 U	0.5 U	0.5 U	1.7	2.7	2.1
Xylene, total	0.5 U	0.5 U	0.5 U	0.5 U	0.5 U	0.5 U	0.5 U
cis-1,2-Dichloroethene	570	0.95	2.7	14	320	390	310
cis-1,3-Dichloropropene	0.5 U	0.5 U	0.5 U	0.5 U	0.5 U	0.5 U	0.5 U
trans-1,2-Dichloroethene	30 J	0.5 U	0.5 U	0.35 J	4.4	27 J	16 J
trans-1,3-Dichloropropene	0.5 U	0.5 U	0.5 U	0.5 U	0.5 U	0.5 U	0.5 U

NA - Not analyzed
B - Blank contamination
J - Estimated
U - Und

Table I-6
Complete Data for Borehole Water Samples During Packer Test
Site 49 RI Report
NSWC - White Oak, Silver Spring, Maryland

Station ID				
Sample ID	049PT206D150160		049PT206D150199	
Sample Date	12/12/02		12/17/02	
Chemical Name				
Volatile Organic Compounds (UG/L)				
1,1,1-Trichloroethane	0.5	U	0.5	U
1,1,2,2-Tetrachloroethane	0.5	U	0.5	U
1,1,2-Trichloro-1,2,2-trifluoroethane(Freon-113)	0.5	U	0.5	U
1,1,2-Trichloroethane	0.5	U	0.5	U
1,1-Dichloroethane	1.1		1.2	
1,1-Dichloroethene	4.7		5.4	
1,2,3-Trichlorobenzene	0.5	U	0.5	U
1,2,4-Trichlorobenzene	0.5	U	0.5	U
1,2-Dibromo-3-chloropropane	0.5	U	0.5	U
1,2-Dibromoethane	0.5	U	0.5	U
1,2-Dichlorobenzene	0.5	U	0.5	U
1,2-Dichloroethane	0.5	U	0.5	U
1,2-Dichloropropane	0.5	U	0.5	U
1,3-Dichlorobenzene	0.5	U	0.5	U
1,4-Dichlorobenzene	0.5	U	0.5	U
2-Butanone	5	U	5	U
2-Hexanone	5	U	5	U
4-Methyl-2-pentanone	5	U	5	U
Acetone	5	U	5	U
Benzene	0.5	U	0.5	U
Bromochloromethane	0.5	U	0.5	U
Bromodichloromethane	0.5	U	0.5	U
Bromoform	0.5	U	0.5	U
Bromomethane	0.5	U	0.5	U
Carbon disulfide	0.5	U	0.5	U
Carbon tetrachloride	0.5	U	0.5	U
Chlorobenzene	0.5	U	0.5	U
Chloroethane	0.5	U	0.5	U
Chloroform	0.5	U	0.5	U
Chloromethane	0.5	U	0.5	U
Cumene	0.5	U	0.5	U
Cyclohexane	0.5	U	0.5	U
Dibromochloromethane	0.5	U	0.5	U

NA - Not analyzed
B - Blank contamination
J - Estimated
U - Undetected

Table I-6
Complete Data for Borehole Water Samples During Packer Test
Site 49 RI Report
NSWC - White Oak, Silver Spring, Maryland

Station ID				
Sample ID	049PT206D150160		049PT206D150199	
Sample Date	12/12/02		12/17/02	
Chemical Name				
Dichlorodifluoromethane(Freon-12)	0.5	U	0.5	U
Ethylbenzene	0.5	U	0.5	U
Methyl acetate	0.5	U	0.5	U
Methyl-tert-butyl ether (MTBE)	0.5	U	0.5	U
Methylcyclohexane	0.5	U	0.5	U
Methylene chloride	1.2	B	0.73	B
Styrene	0.5	U	0.5	U
Tetrachloroethene	0.5	U	0.5	U
Toluene	9.1		1.7	
Trichloroethene	1,900		1,600	
Trichlorofluoromethane(Freon-11)	0.5	U	0.5	U
Vinyl chloride	3		3.3	
Xylene, total	0.5	U	0.5	U
cis-1,2-Dichloroethene	490		520	
cis-1,3-Dichloropropene	0.5	U	0.5	U
trans-1,2-Dichloroethene	23		22	
trans-1,3-Dichloropropene	0.5	U	0.5	U

NA - Not analyzed
B - Blank contamination
J - Estimated
U - Und[illegible]

Table I-7
Complete Data for Paint Branch Surface Water Samples
Site 49 RI Report
NSWC - White Oak, Silver Spring, Maryland

Station ID	PBSW210		PBSW211		PBSW211		PBSW212		PBSW213	
Sample ID	PBSW2100001		PBSW2119901		PBSW2110001		PBSW2120001		PBSW2130001	
Sample Date	08/02/02		08/02/02		08/02/02		08/02/02		10/09/02	
Chemical Name										
Volatile Organic Compounds (UG/L)										
1,1,1-Trichloroethane	10	U	10	U	10	U	10	U	0.5	UJ
1,1,2,2-Tetrachloroethane	10	U	10	U	10	U	10	U	0.5	UJ
1,1,2-Trichloro-1,2,2-trifluoroethane(Freon-113)	10	U	10	U	10	U	10	U	0.5	UJ
1,1,2-Trichloroethane	10	U	10	U	10	U	10	U	0.5	UJ
1,1-Dichloroethane	10	U	10	U	10	U	10	U	0.5	UJ
1,1-Dichloroethene	10	U	10	U	10	U	10	U	0.5	UJ
1,2,3-Trichlorobenzene	NA		NA		NA		NA		0.5	UJ
1,2,4-Trichlorobenzene	10	U	10	U	10	U	10	U	0.5	UJ
1,2-Dibromo-3-chloropropane	10	U	10	U	10	U	10	U	0.5	R
1,2-Dibromoethane	10	U	10	U	10	U	10	U	0.5	UJ
1,2-Dichlorobenzene	10	U	10	U	10	U	10	U	0.5	UJ
1,2-Dichloroethane	10	U	10	U	10	U	10	U	0.5	UJ
1,2-Dichloropropane	10	U	10	U	10	U	10	U	0.5	UJ
1,3-Dichlorobenzene	10	U	10	U	10	U	10	U	0.5	UJ
1,4-Dichlorobenzene	10	U	10	U	10	U	10	U	0.5	UJ
2-Butanone	10	U	10	U	10	U	10	U	5	R
2-Hexanone	10	U	10	U	10	U	10	U	5	UJ
4-Methyl-2-pentanone	10	U	10	U	10	U	10	U	5	UJ
Acetone	2	B	1.5	B	3.6	B	1.5	B	5	R
Benzene	10	U	10	U	10	U	10	U	0.5	UJ
Bromochloromethane	NA		NA		NA		NA		0.5	UJ
Bromodichloromethane	10	U	10	U	10	U	10	U	0.5	UJ
Bromoform	10	U	10	U	10	U	10	U	0.5	UJ
Bromomethane	10	U	10	U	10	U	10	U	0.5	UJ
Carbon disulfide	10	U	10	U	10	U	10	U	0.5	UJ
Carbon tetrachloride	10	U	10	U	10	U	10	U	0.5	UJ
Chlorobenzene	10	U	10	U	10	U	10	U	0.5	UJ
Chloroethane	10	U	10	U	10	U	10	U	0.5	UJ
Chloroform	10	U	10	U	10	U	10	U	0.5	UJ
Chloromethane	10	U	10	U	10	U	10	U	0.5	UJ
Cumene	10	U	10	U	10	U	10	U	0.5	UJ
Cyclohexane	10	U	10	U	10	U	10	U	0.5	UJ
Dibromochloromethane	10	U	10	U	10	U	10	U	0.5	UJ

NA - Not analyzed
B - Blank contamination
J - Estimated
K - Biased high
R - Unusable

U - Undetected
UJ - Undetected, estimated limit
UL - Undetected, limit biased low

Table I-7
Complete Data for Paint Branch Surface Water Samples
Site 49 RI Report
NSWC - White Oak, Silver Spring, Maryland

Station ID	PBSW210		PBSW211		PBSW211		PBSW212		PBSW213	
Sample ID	PBSW2100001		PBSW2119901		PBSW2110001		PBSW2120001		PBSW2130001	
Sample Date	08/02/02		08/02/02		08/02/02		08/02/02		10/09/02	
Chemical Name										
Dichlorodifluoromethane(Freon-12)	10	U	10	U	10	U	10	U	0.5	UJ
Ethylbenzene	10	U	10	U	10	U	10	U	0.5	UJ
Methyl acetate	10	U	10	U	10	U	10	U	0.5	UJ
Methyl-tert-butyl ether (MTBE)	10	U	10	U	10	U	10	U	0.5	UJ
Methylcyclohexane	10	U	10	U	10	U	10	U	0.5	UJ
Methylene chloride	10	U	10	U	1.1	B	1	B	0.38	B
Styrene	10	U	10	U	10	U	10	U	0.5	UJ
Tetrachloroethene	10	U	10	U	10	U	10	U	0.5	UJ
Toluene	10	U	10	U	10	U	10	U	0.5	UJ
Trichloroethene	10	U	10	U	10	U	10	U	0.5	UJ
Trichlorofluoromethane(Freon-11)	10	U	10	U	10	U	10	U	0.5	UJ
Vinyl chloride	10	U	10	U	10	U	10	U	0.5	UJ
Xylene, total	10	U	10	U	10	U	10	U	0.5	UJ
cis-1,2-Dichloroethene	10	U	10	U	10	U	10	U	0.5	UJ
cis-1,3-Dichloropropene	10	U	10	U	10	U	10	U	0.5	UJ
trans-1,2-Dichloroethene	10	U	10	U	10	U	10	U	0.5	UJ
trans-1,3-Dichloropropene	10	U	10	U	10	U	10	U	0.5	UJ
Semivolatile Organic Compounds (UG/L)										
1,1-Biphenyl	11	U	11	U	10	U	11	U	NA	
2,2'-Oxybis(1-chloropropane)	11	U	11	U	10	U	11	U	NA	
2,4,5-Trichlorophenol	26	U	26	U	25	U	26	U	NA	
2,4,6-Trichlorophenol	11	U	11	U	10	U	11	U	NA	
2,4-Dichlorophenol	11	U	11	U	10	U	11	U	NA	
2,4-Dimethylphenol	11	U	11	U	10	U	11	U	NA	
2,4-Dinitrophenol	26	U	26	U	25	U	26	U	NA	
2,4-Dinitrotoluene	11	U	11	U	10	U	11	U	NA	
2,6-Dinitrotoluene	11	R	11	R	10	R	11	R	NA	
2-Chloronaphthalene	11	U	11	U	10	U	11	U	NA	
2-Chlorophenol	11	U	11	U	10	U	11	U	NA	
2-Methylnaphthalene	11	U	11	U	10	U	11	U	NA	
2-Methylphenol	11	U	11	U	10	U	11	U	NA	
2-Nitroaniline	26	U	26	U	25	U	26	U	NA	
2-Nitrophenol	11	U	11	U	10	U	11	U	NA	
3,3'-Dichlorobenzidine	11	U	11	U	10	U	11	U	NA	

U - Undetected
UJ - Undetected, estimated limit
UL - Undetected, limit biased low

NA - Not analyzed
B - Blank contamination
J - Estimated
K - Biased high
R - Unu

Table I-7
Complete Data for Paint Branch Surface Water Samples
Site 49 RI Report
NSWC - White Oak, Silver Spring, Maryland

Station ID	PBSW210		PBSW211		PBSW211		PBSW212		PBSW213	
Sample ID	PBSW2100001		PBSW2119901		PBSW2110001		PBSW2120001		PBSW2130001	
Sample Date	08/02/02		08/02/02		08/02/02		08/02/02		10/09/02	
Chemical Name										
3-Nitroaniline	26	U	26	U	25	U	26	U	NA	
4,6-Dinitro-2-methylphenol	26	U	26	U	25	U	26	U	NA	
4-Bromophenyl-phenylether	11	U	11	U	10	U	11	U	NA	
4-Chloro-3-methylphenol	3.9	K	11	U	10	U	11	U	NA	
4-Chloroaniline	11	U	11	U	10	U	11	U	NA	
4-Chlorophenyl-phenylether	11	U	11	U	10	U	11	U	NA	
4-Methylphenol	11	U	11	U	10	U	11	U	NA	
4-Nitroaniline	26	U	26	U	25	U	26	U	NA	
4-Nitrophenol	26	U	26	U	25	U	26	U	NA	
Acenaphthene	11	U	11	U	10	U	11	U	NA	
Acenaphthylene	11	U	11	U	10	U	11	U	NA	
Acetophenone	11	U	11	U	10	U	11	U	NA	
Anthracene	11	U	11	U	10	U	11	U	NA	
Atrazine	11	U	11	U	10	U	11	U	NA	
Benzaldehyde	11	U	11	U	10	U	11	U	NA	
Benzo(a)anthracene	11	U	11	U	10	U	11	U	NA	
Benzo(a)pyrene	11	U	11	U	10	U	11	U	NA	
Benzo(b)fluoranthene	11	U	11	U	10	U	11	U	NA	
Benzo(g,h,i)perylene	11	U	11	U	10	U	11	U	NA	
Benzo(k)fluoranthene	11	U	11	U	10	U	11	U	NA	
Butylbenzylphthalate	11	U	11	U	10	U	11	U	NA	
Caprolactam	11	U	11	U	10	U	11	U	NA	
Carbazole	11	U	11	U	10	U	11	U	NA	
Chrysene	11	U	11	U	10	U	11	U	NA	
Di-n-butylphthalate	11	U	11	U	10	U	11	U	NA	
Di-n-octylphthalate	11	U	11	U	10	U	11	U	NA	
Dibenz(a,h)anthracene	11	U	11	U	10	U	11	U	NA	
Dibenzofuran	11	U	11	U	10	U	11	U	NA	
Diethylphthalate	11	U	11	U	10	U	11	U	NA	
Dimethyl phthalate	11	U	11	U	10	U	11	U	NA	
Fluoranthene	11	U	11	U	10	U	11	U	NA	
Fluorene	11	U	11	U	10	U	11	U	NA	
Hexachlorobenzene	11	U	11	U	10	U	11	U	NA	
Hexachlorobutadiene	11	U	11	U	10	U	11	U	NA	
Hexachlorocyclopentadiene	11	U	11	U	10	U	11	U	NA	

NA - Not analyzed
B - Blank contamination
J - Estimated
K - Biased high
R - Unusable

U - Undetected
UJ - Undetected, estimated limit
UL - Undetected, limit biased low

Table I-7
Complete Data for Paint Branch Surface Water Samples
Site 49 RI Report
NSWC - White Oak, Silver Spring, Maryland

Station ID	PBSW210		PBSW211		PBSW211		PBSW212		PBSW213	
Sample ID	PBSW2100001		PBSW2119901		PBSW2110001		PBSW2120001		PBSW2130001	
Sample Date	08/02/02		08/02/02		08/02/02		08/02/02		10/09/02	
Chemical Name										
Hexachloroethane	11	U	11	U	10	U	11	U	NA	
Indeno(1,2,3-cd)pyrene	11	U	11	U	10	U	11	U	NA	
Isophorone	11	U	11	U	10	U	11	U	NA	
Naphthalene	11	U	11	U	10	U	11	U	NA	
Nitrobenzene	11	R	11	R	10	R	11	R	NA	
Pentachlorophenol	26	U	26	U	25	U	26	U	NA	
Phenanthrene	11	U	11	U	10	U	11	U	NA	
Phenol	11	U	11	U	10	U	11	U	NA	
Pyrene	11	U	11	U	10	U	11	U	NA	
bis(2-Chloroethoxy)methane	11	U	11	U	10	U	11	U	NA	
bis(2-Chloroethyl)ether	11	U	11	U	10	U	11	U	NA	
bis(2-Ethylhexyl)phthalate	1.4	J	2.5	J	1.4	J	11	U	NA	
n-Nitroso-di-n-propylamine	11	U	11	U	10	U	11	U	NA	
n-Nitrosodiphenylamine	11	U	11	U	10	U	11	U	NA	
Explosives (UG/L)										
1,3,5-Trinitrobenzene	0.26	U	0.26	U	0.26	U	0.26	U	NA	
1,3-Dinitrobenzene	0.26	U	0.26	U	0.26	U	0.26	U	NA	
2,4,6-Trinitrotoluene	0.26	U	0.26	U	0.26	U	0.26	U	NA	
2,4-Dinitrotoluene	0.26	R	0.26	R	0.26	R	0.26	R	NA	
2,6-Dinitrotoluene	0.26	U	0.26	U	0.26	U	0.26	U	NA	
2-Amino-4,6-dinitrotoluene	0.26	U	0.26	U	0.26	U	0.26	U	NA	
2-Nitrotoluene	0.52	UL	0.52	U	0.52	U	0.52	U	NA	
3-Nitrotoluene	0.52	UL	0.52	U	0.52	U	0.52	U	NA	
4-Amino-2,6-dinitrotoluene	0.26	U	0.26	U	0.26	U	0.26	U	NA	
4-Nitrotoluene	0.52	U	0.52	U	0.52	U	0.52	U	NA	
HMX	0.52	U	0.52	U	0.52	U	0.52	U	NA	
Nitrobenzene	0.26	U	0.26	U	0.26	U	0.26	U	NA	
Perchlorate	4	U	4	U	4	U	4	U	NA	
RDX	0.52	U	0.52	U	0.52	U	0.52	U	NA	
Tetryl	0.52	UL	0.52	U	0.52	U	0.52	U	NA	
Total Metals (UG/L)										
Aluminum	13.6	U	99.8	B	13.6	U	13.6	U	NA	
Antimony	2.3	U	2.3	U	2.3	U	2.3	U	NA	

NA - Not analyzed
B - Blank contamination
J - Estimated
K - Biased high
R - Unus

U - Undetected
UJ - Undetected, estimated limit
UL - Undetected, limit biased low

Table I-7
Complete Data for Paint Branch Surface Water Samples
Site 49 RI Report
NSWC - White Oak, Silver Spring, Maryland

Station ID	PBSW210		PBSW211		PBSW212	PBSW213
Sample ID	PBSW2100001	PBSW2119901	PBSW2110001	PBSW2120001	PBSW2130001
Sample Date	08/02/02	08/02/02	08/02/02	08/02/02	10/09/02
Chemical Name					
Arsenic	3.5 U	3.5 U	3.5 U	3.5 U	NA
Barium	28.6 J	30 J	29.8 J	29.6 J	NA
Beryllium	0.1 U	0.1 U	0.1 U	0.1 U	NA
Cadmium	0.3 U	0.3 U	0.3 U	0.3 U	NA
Calcium	14,300	14,500	14,800	14,500	NA
Chromium	0.8 U	0.8 U	0.8 U	0.8 U	NA
Cobalt	0.6 U	0.6 U	0.6 U	0.6 U	NA
Copper	3.1 B	4.4 B	4 B	3.1 B	NA
Cyanide	10 U	10 U	10 U	10 U	NA
Iron	255	511	373	343	NA
Lead	1.5 UL	1.6 J	1.5 UL	1.5 UL	NA
Magnesium	4,020 J	4,020 J	4,090 J	4,040 J	NA
Manganese	25.4	76.9	60.9	48.2	NA
Mercury	0.1 U	0.1 U	0.1 U	0.1 U	NA
Nickel	1 U	4.1 J	1 J	1 U	NA
Potassium	2,930 J	2,970 J	3,100 J	2,950 J	NA
Selenium	3 U	3 U	3 U	3 U	NA
Silver	1.3 U	1.3 U	1.3 U	1.3 U	NA
Sodium	12,400	12,500	12,900	12,500	NA
Thallium	4.2 U	4.2 U	4.2 U	4.2 U	NA
Vanadium	1.3 U	1.3 U	1.3 U	1.3 U	NA
Zinc	6.5 B	7 B	6.8 B	3.6 B	NA
Dissolved Metals (UG/L)					
Aluminum	13.6 U	13.6 U	13.6 U	13.6 U	NA
Antimony	2.3 U	2.3 U	2.3 U	2.3 U	NA
Arsenic	3.5 U	3.5 U	3.5 U	3.5 U	NA
Barium	27.3 J	27.9 J	28.1 J	28.3 J	NA
Beryllium	0.1 U	0.1 U	0.1 U	0.1 U	NA
Cadmium	0.3 U	0.3 U	0.3 U	0.3 U	NA
Calcium	14,000	14,600	14,300	13,900	NA
Chromium	0.8 U	0.8 U	0.8 U	0.8 U	NA
Cobalt	0.6 U	0.6 U	0.6 U	0.6 U	NA
Copper	2.5 B	3.3 B	3.6 B	2.9 B	NA
Iron	25.2 U	25.2 U	78.1 J	25.2 U	NA

NA - Not analyzed
B - Blank contamination
J - Estimated
K - Biased high
R - Unusable

U - Undetected
UJ - Undetected, estimated limit
UL - Undetected, limit biased low

Table I-7
Complete Data for Paint Branch Surface Water Samples
Site 49 RI Report
NSWC - White Oak, Silver Spring, Maryland

Station ID	PBSW210		PBSW211		PBSW211		PBSW212		PBSW213	
Sample ID	PBSW2100001		PBSW2119901		PBSW2110001		PBSW2120001		PBSW2130001	
Sample Date	08/02/02		08/02/02		08/02/02		08/02/02		10/09/02	
Chemical Name										
Lead	1.5	UL	1.5	UL	1.5	UL	1.5	U	NA	
Magnesium	3,930	J	4,080	J	3,970	J	3,880	J	NA	
Manganese	25.3		48.4		50.2		33.9		NA	
Mercury	0.1	U	0.1	U	0.1	U	0.1	U	NA	
Nickel	1	U	1	U	1	U	1	U	NA	
Potassium	2,860	J	2,990	J	2,990	J	2,890	J	NA	
Selenium	3	U	3	U	3	U	3	U	NA	
Silver	1.3	U	1.3	U	1.3	U	1.3	U	NA	
Sodium	12,000		12,600		12,500		12,200		NA	
Thallium	4.2	U	4.2	U	4.2	U	4.2	U	NA	
Vanadium	1.3	U	1.3	U	1.3	U	1.8	J	NA	
Zinc	5.5	B	5.2	B	9.4	B	5.7	B	NA	
Wet Chemistry (MG/L)										
Hardness	54		54		56		54		NA	

NA - Not analyzed
B - Blank contamination
J - Estimated
K - Biased high
R - Unus

U - Undetected
UJ - Undetected, estimated limit
UL - Undetected, limit biased low